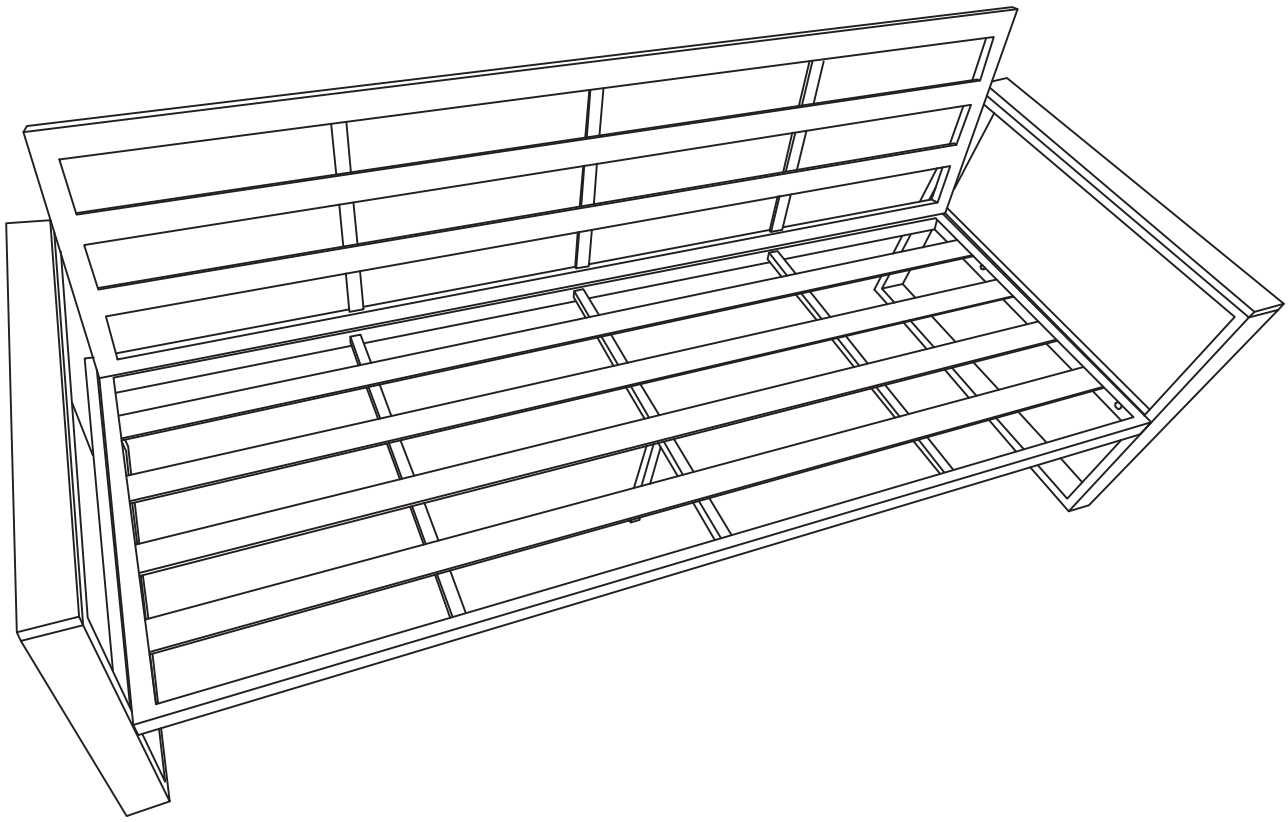

INSTRUCTION MANUAL

ASSEMBLY INSTRUCTIONS

Carefully unpack all the components and verify that all the necessary parts are included as listed in the packaging.

Identify each component and refer to the provided assembly diagram or step-by-step instructions.

Assemble the furniture in the order specified to ensure proper alignment and fit.

Use the provided tools or recommended tools for assembly. Do not use excessive force when tightening screws or bolts.

If any difficulties arise during assembly, consult the troubleshooting section or contact out customer support .

Tools Required



PART

NO.	PICTURE	QTY	NO.	PICTURE	QTY	NO.	PICTURE	QTY
M	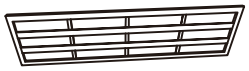	1	E	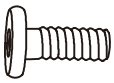 M6x25mm	4	H		12
N	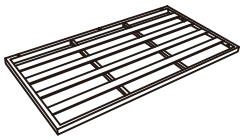	1	F	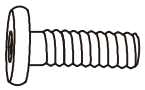 M6x30mm	2	I		12
C	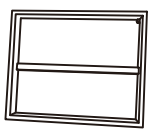 Left	1	G	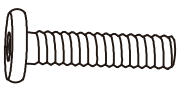 M6x45mm	4	O		1
D	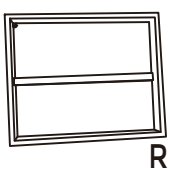 Right	1	P	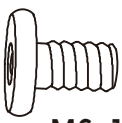 M6x15mm	2	Z	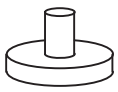	4

PRODUCT ASSEMBLY

Do not fully tighten all bolts until assembly is complete.

STEP 1

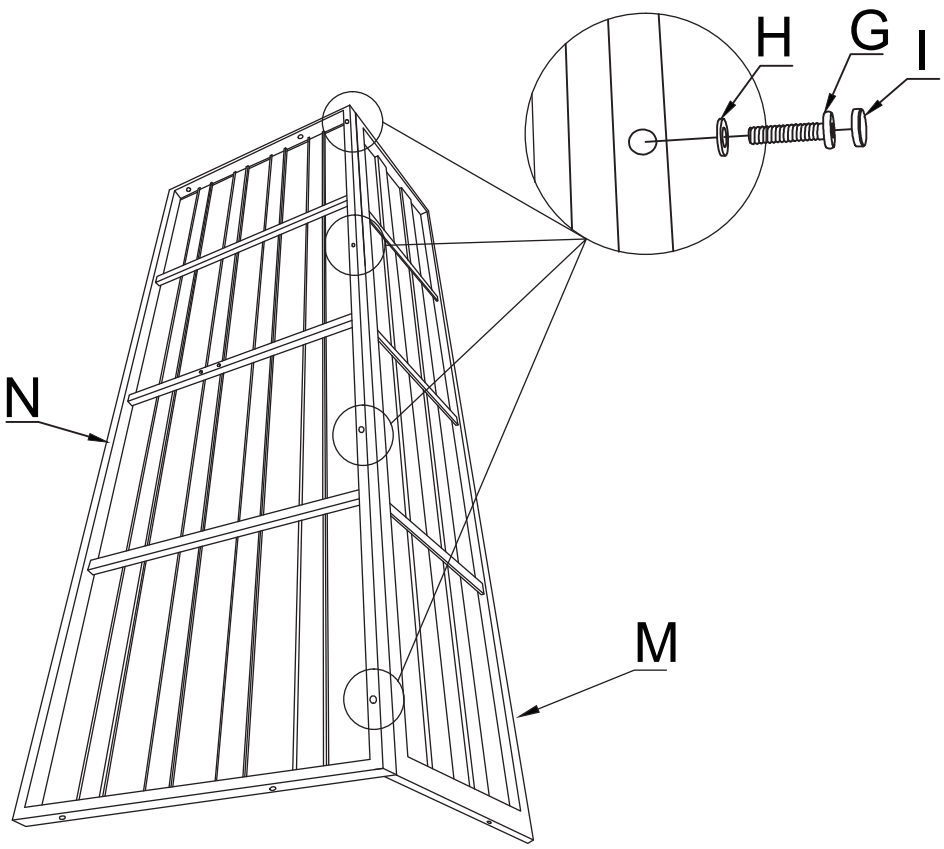

STEP 2

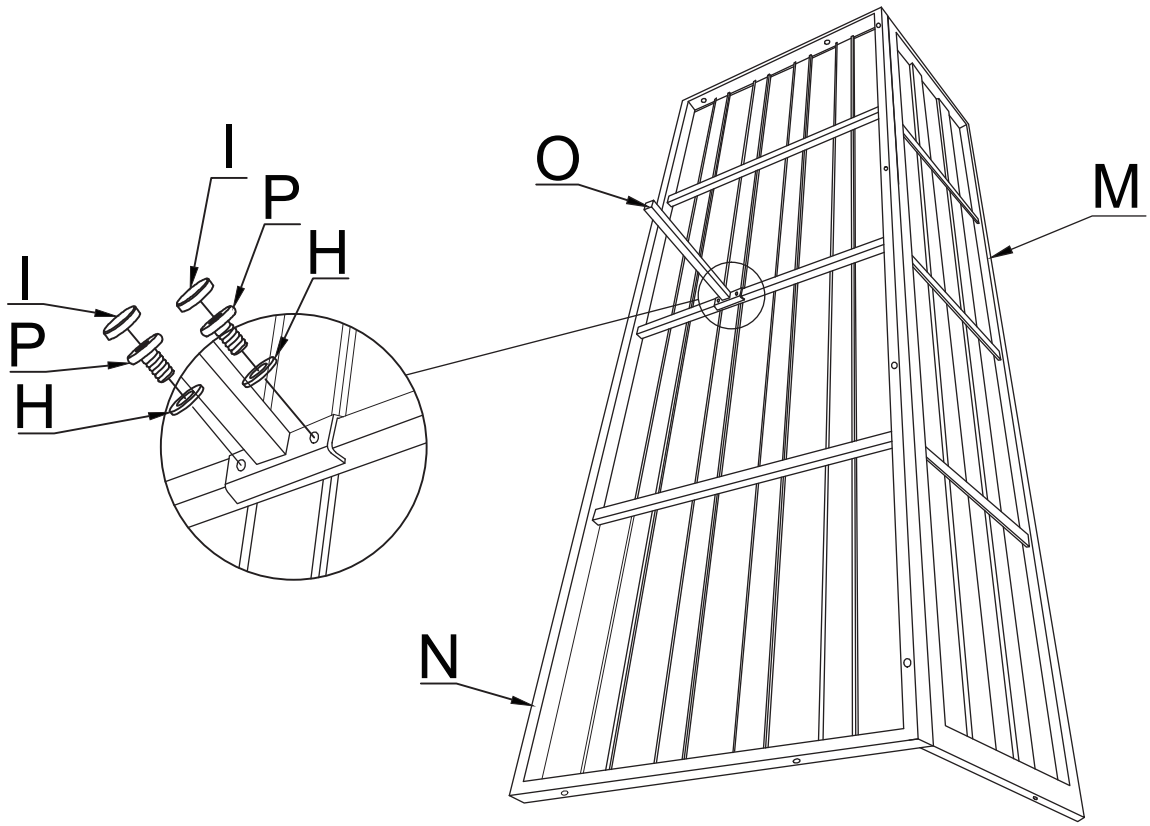

PRODUCT ASSEMBLY

Do not fully tighten all bolts until assembly is complete.

STEP 3

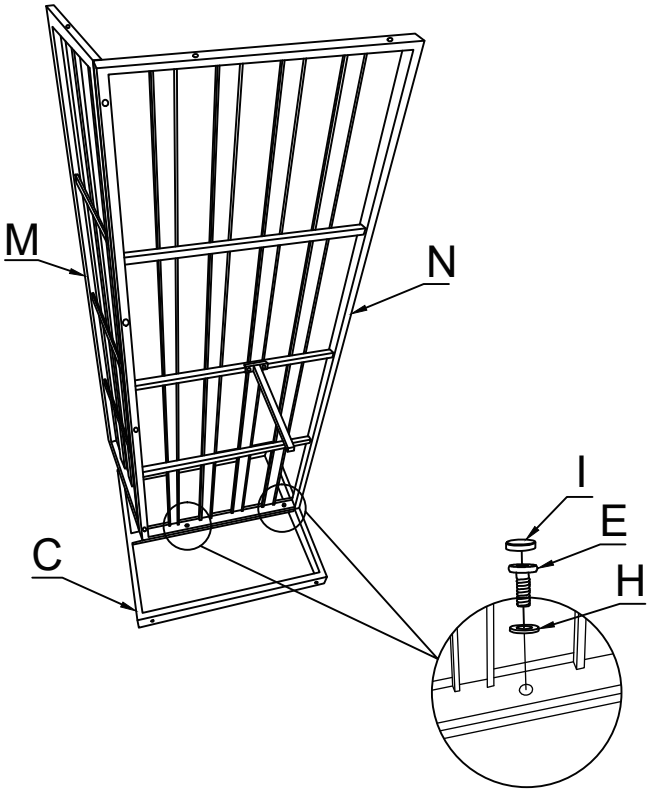

STEP 4

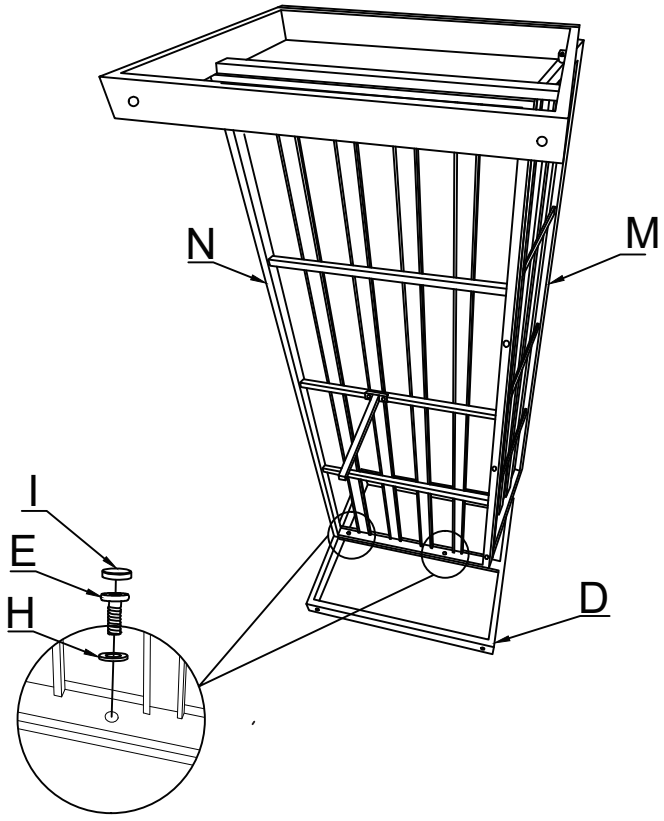

PRODUCT ASSEMBLY

Do not fully tighten all bolts until assembly is complete.

STEP 5

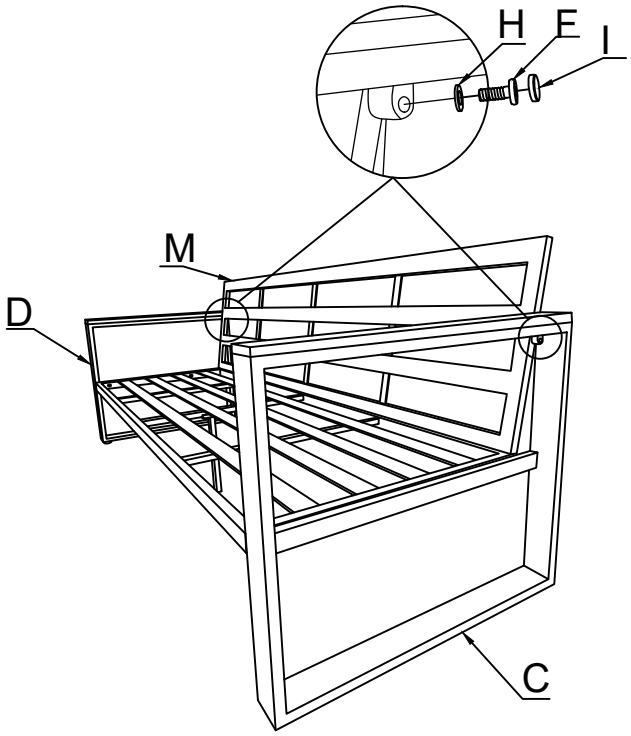

STEP 6

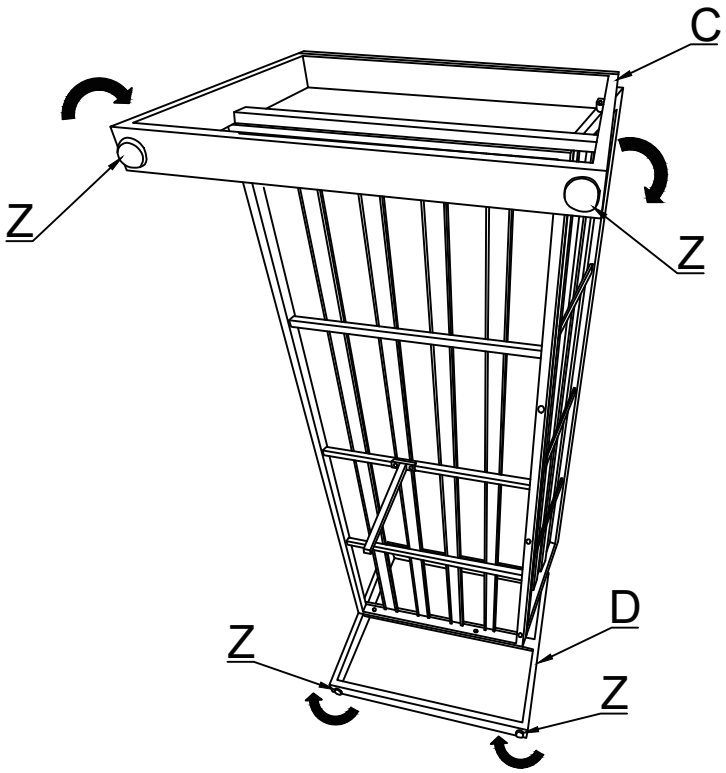

MAINTENANCE AND CARE

Protect your furniture from extreme weather conditions by moving it to a covered area. Alternatively, use furniture covers or traps for added protection.

Avoid dragging or placing heavy objects on the furniture to prevent potential damage.

Regularly inspect your furniture for signs of wear, loose strands, or damage. Address any issues promptly.

Hardware may loosen over time. Periodically check to make sure all connections are tight.Re-tighten if necessary.

Do not dispose of any packaging or contents of the shipping carton until assembly is completed to avoid accidentally discarding small parts or hardware.

Do not use sharp objects to scratch the painted surface. We do not recommend the use of chemical cleansers,abrasives or furniture polish on our lacquered finish.

Clean with a damp cloth soaked in warm soapy water or a specialized, suitable cleaning product.

Conclude the cleaning process by wiping with a clean, dry cloth.

Ensure proper drying after cleaning or no exposure to rain to prevent mold or mildew growth.

Avoid placing transparent glasses on the wood-plastic panel surface for long to prevent concentrating sunlight, which could lead to melting of the surface.

WARRANTY INFORMATION

Warranty Coverage: Our warranty provides protection against manufacturing defects in materials and workmanship for a specified period from the date of purchase, as outlined in the accompanying warranty documentation.

Exclusions: The warranty does not cover damages resulting from misuse, negligence, accidents, normal wear and tear, unauthorized repairs or modifications, improper assembly, or failure to adhere to the care and maintenance guidelines provided.

Warranty Claim Process

To initiate a return, please follow these steps:

1. Log into your account and go to the "Your Orders" section.
2. Locate the order containing the item you wish to return.
3. Contact our customer service for assistance in obtaining a prepaid return label.
4. Once you receive the return lable, securely affix it to the package.
5. You can then choose to drop off the package at a designated carrier location or arrange for a pickup.
6. After we receive and inspect the returned product, we will initiate the refund process.
7. The refund will be credited back to the original payment method used during the purchase.
8. Typically, refunds are processed within 3-5 business days.