NOTICE

*Please make sure that you have all parts indicated and they are in good condition before you begin assembly of this item. Refer to part list and hardware list below for guidance.
*This item should be assembled on a soft surface to prevent scratching the finish during assembly.
*This item may require periodic tightening.
*If you are having difficulty, our friendly Customer Care team is always here to help. Please email **customersupport@safavieh.com**

PREPARATION

*Before beginning assembly of product, make sure all parts are present. Compare parts with part contents list and hardware contents list.
*If any part is missing or damaged,do not attempt to assemble the product.
*Tools Required for Assembly (included): Allen Key
*Estimated Assembly Time: 10 minutes.

CARE AND MAINTENANCE

Store outdoor furniture indoors or cover well when not in use. Dust regularly with small brush or vacuum. Spills should be taken care of immediately before they harden or stain with a slightly damped sponge.

Part List and Hardware List

PIECE	DESCRIPTION	PICTURE	QUANTITY
A	Seat Frame	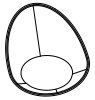	2x
B	Leg Frame		2x
C	Table Top Frame		1x
D	Table Leg Frame		1x
E	Glass Table		1x
CSH1	Seat Cushion		2x

PIECE	DESCRIPTION	PICTURE	QUANTITY
HW1	Allen Bolt (M6x20)		8x
HW2	Allen Bolt (M6x30)		4x
HW3	Flat Washer (M6)		12x
HW4	Allen Key		1x

SAFAVIEH OUTDOOR

MODEL# PAT7544
PRODUCT DIMENSIONS:
27.17"L x 29.92"W x 31.49"H (CHAIR)
17.72"L x 17.72"W x 19.29"H (TABLE)

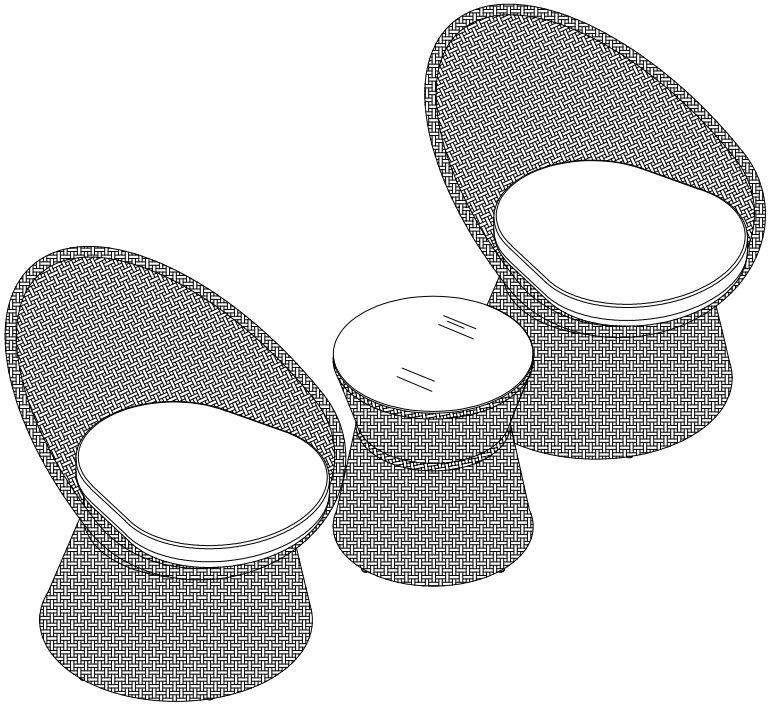

WARNING

Weight capacity : 275 Lbs (single seat)
Warning : Do not stand on chair / table
Warning : Do not over torque bolts/screws

PREPARATION

*Before beginning assembly of product, make sure all parts are present. Compare parts with part contents list and hardware contents list.
*If any part is missing or damaged, do not attempt to assemble the product.
*Estimated Assembly Time : 10 minutes.
*Tools Required for Assembly (included): Allen Key
*If you are having dificulty, our friendly Customer care team is always here to help. Please email **customersupport@safavieh.com**

1 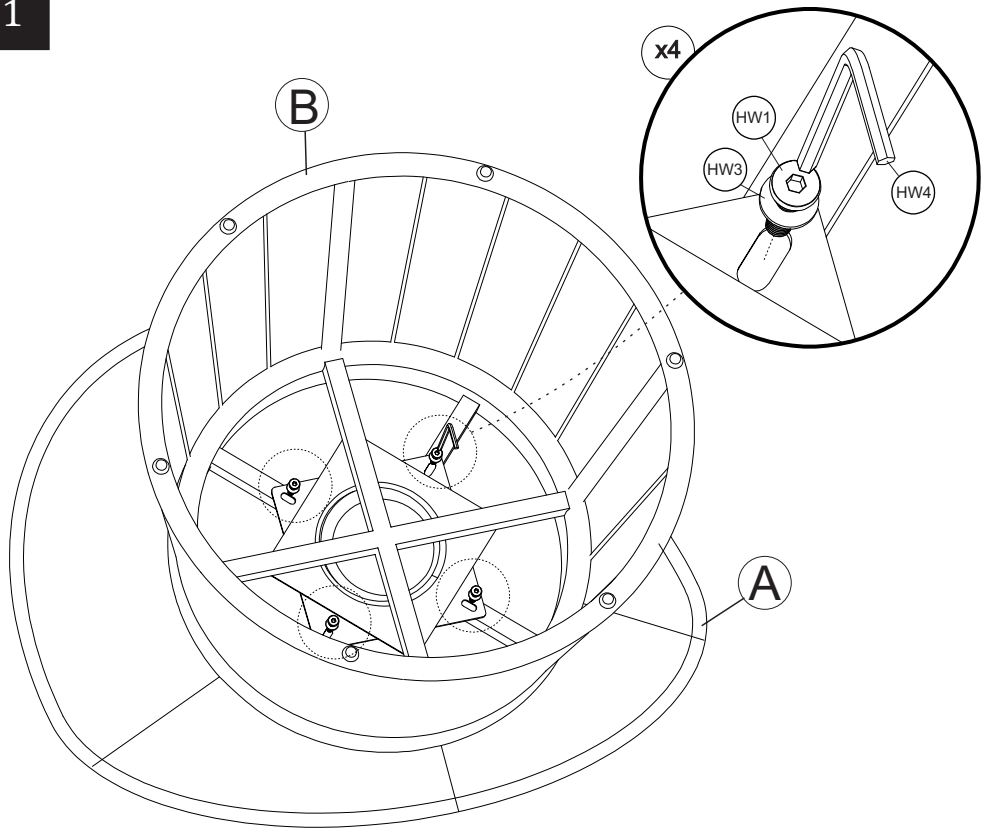	2 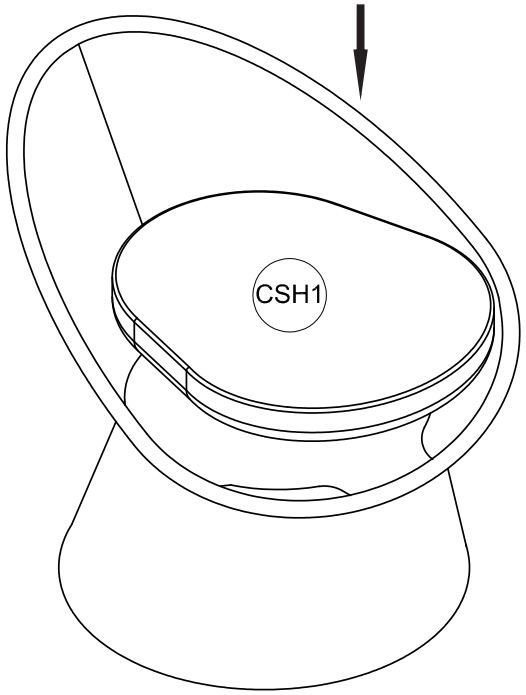
STEP 1: Place the Seat Frame (A) upside down on a soft surface. Align the screw holes on it to the screw holes on the Leg Frame (B). Place the Flat Washer (HW3) on the Allen Bolts (HW1) in the order shown below. Use the Allen Key (HW4) to screw in the Bolts (HW1) with the washers attached.	STEP 2: Place the Seat Cushion (CSH1) on the assembled chair.

PREPARATION

*Before beginning assembly of product, make sure all parts are present. Compare parts with part contents list and hardware contents list.
*If any part is missing or damaged, do not attempt to assemble the product.
*Estimated Assembly Time : 10 minutes.
*Tools Required for Assembly (included): Allen Key
*If you are having dificulty, our friendly Customer care team is always here to help. Please email **customersupport@safavieh.com**

3	4
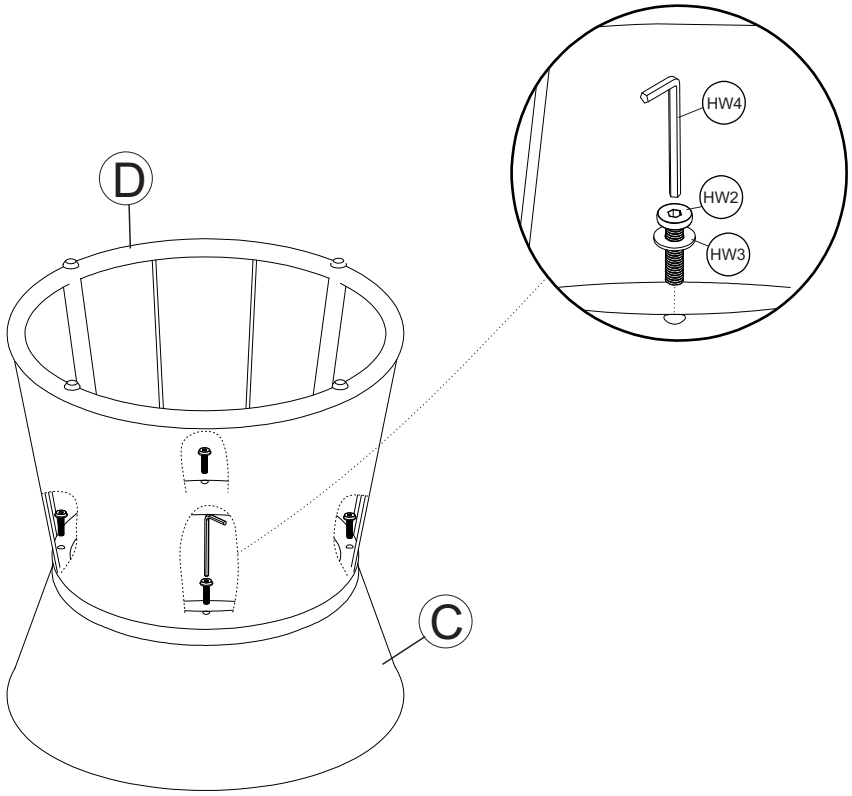	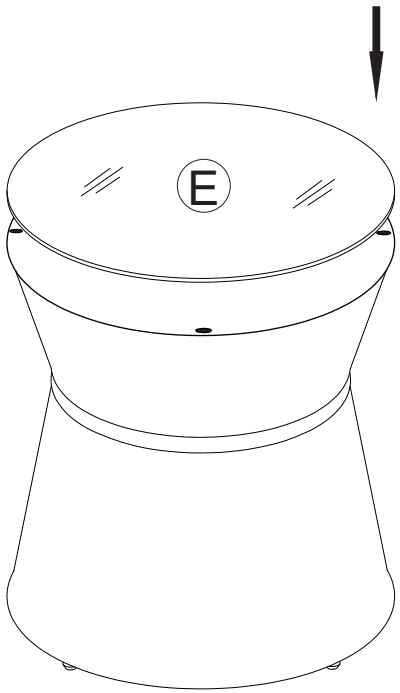
STEP 3: Place the Table Top Frame (C) upside down on a soft surface. Align the screw holes on it to the screw holes on the Table Leg Frame (D). Place the Flat Washer (HW3) on the Allen Bolts (HW2) in the order shown below. Use the Allen Key (HW4) to screw in the Bolts (HW2) with the washers attached.	STEP 4: Place the Glass Table (E) on the assembled table.

PREPARATION

*Before beginning assembly of product, make sure all parts are present. Compare parts with part contents list and hardware contents list.
*If any part is missing or damaged, do not attempt to assemble the product.
*Estimated Assembly Time : 10 minutes.
*Tools Required for Assembly (included): Allen Key
*If you are having dificulty, our friendly Customer care team is always here to help. Please email **customersupport@safavieh.com**

5

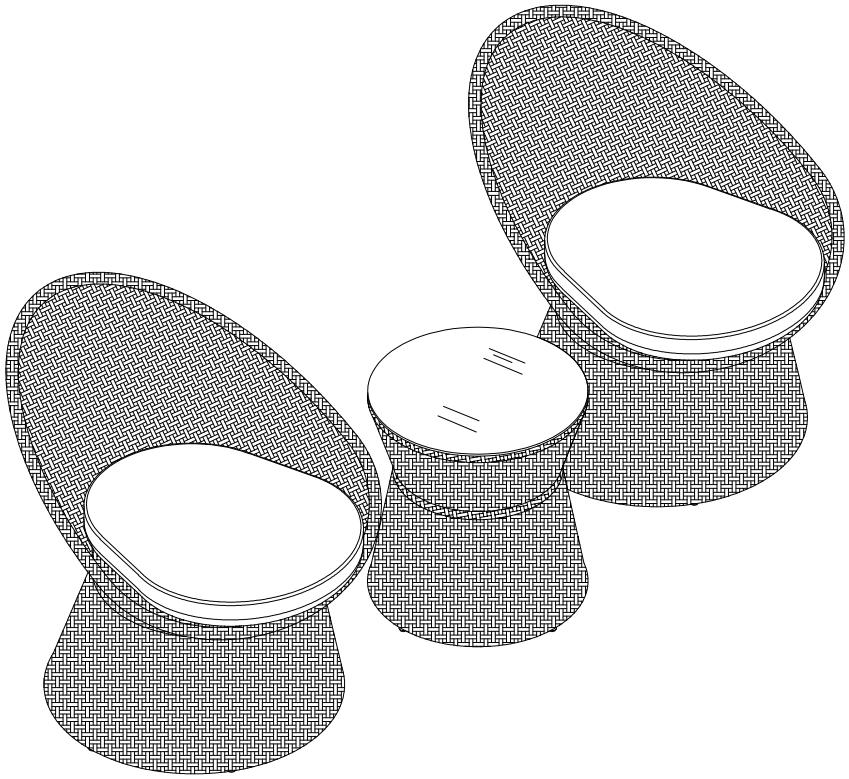

STEP 5: Finishing for using