Installation Steps：

①

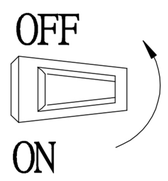

1. Turn off the power.

②

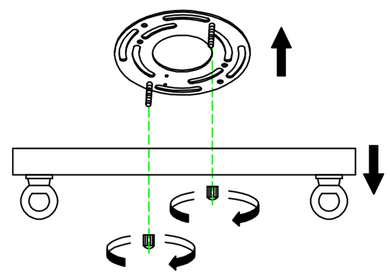

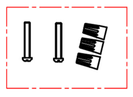

Accessory kit

2. Unscrew the two discs and then install the two accessories (F).

③

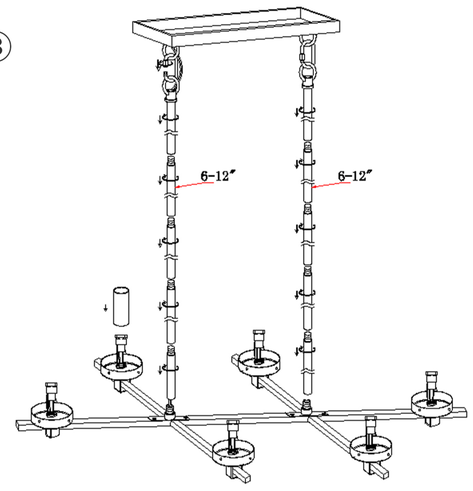

3. On the lamp head on the casing(N) sleeve, six straight pipes (I) need to be passed through both sides of the power cord, and the last straight pipe must be a straight pipe with a lifting ring (H). Twist the straight pipe from bottom to top, make sure that the power cord passes through the middle of each tube when twisting the wire, and finally put the movable buckle (G) into the hanging ring of the square box (E) and the lifting ring of the straight pipe and tighten. The installation method is the same on both ends. Finally, tighten the straight tube (I) with the light frame (L).

④

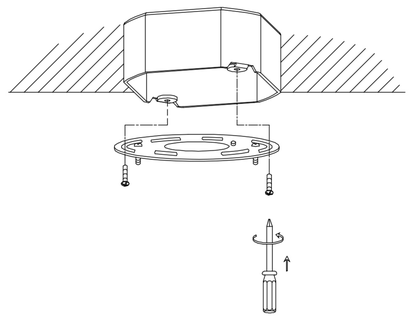

4. Use two machine wire (B) to tighten the pegboard (D) with the junction box (A) and install the pegboard (D).

⑤

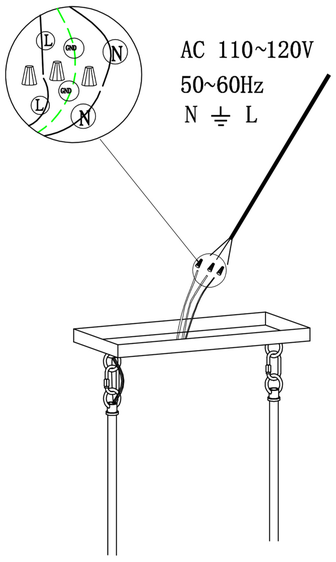

5. The positive, negative and ground wires correspond and connect with the power line, and wrap the terminal cap with adhesive tape (C).

⑥

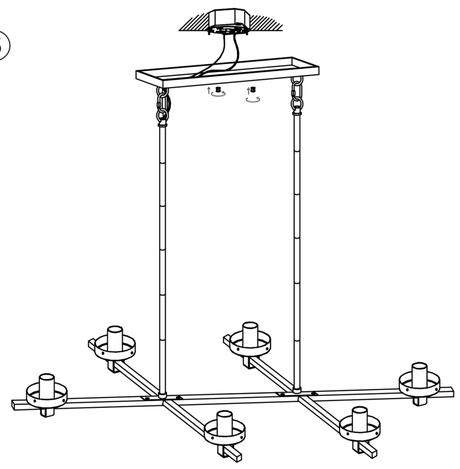

6. Lift the whole lamp upward, align the two holes on the square box (E) with the machine wire (B) on the pegboard (D), then tighten the fittings (F) and hang the lamp holder(J).

⑦

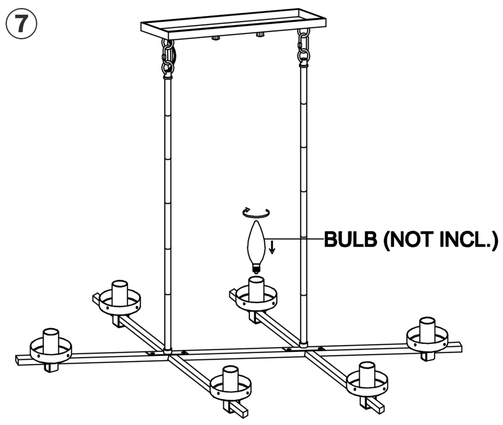

7. Install the light bulb.

⑧

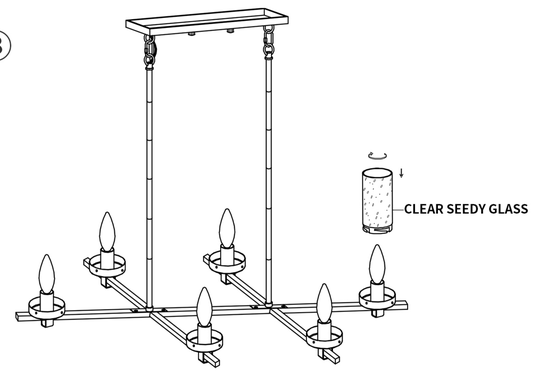

8. Install the glass cover (N).

⑨

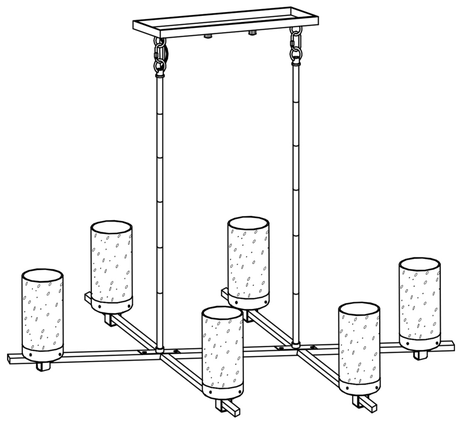

9. Installation is complete, turn on the light.

Notice： This light fixture should be installed in accordance with all applicable, local installation codes, and by a person familiar with the construction and operation of it, as well as the hazards involved. Inspect items and contents carefully. If any damage or defect is found, do not install it.

Accessories：
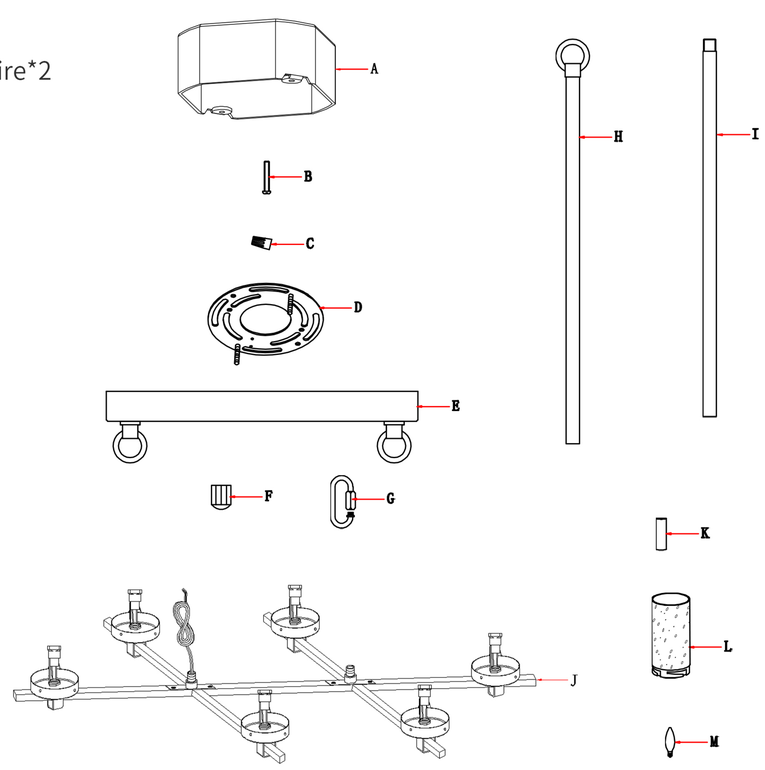
A: Junction box*0
B: Inch cross plate head machine wire*2
C: U.S. standard wiring cap * 3
D: eight hanging plate * 1
E: square box * 1
F: decorative grain * 2
G: activity buckle * 2
H: hanging ring + straight pipe * 2
I: straight pipe * 10
J: Light frame * 1
K: Casing*6
L: Clear seedy glass*6
M: Bulb*0
N: casing*6