Kablle

Instruction

Pull Down Bathroom Faucet

Pop-up Drain with overflow Installation Guide

NOTES:

Fits for sink WITH overflow hole.
Clean the sink hole, make sure to remove debris.
Please avoid using plumber's putty.
The seal on top is leak-free.
Plumber's putty might cause damage.
Silicone and plumbing tape can be use for sealing requirement.

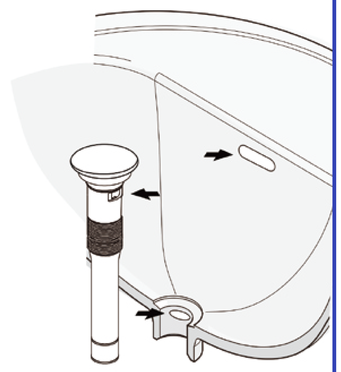

1 Unscrew components A& B

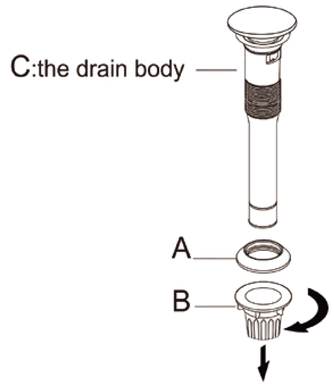

2 Slide the drain body C through the hole in the sink.

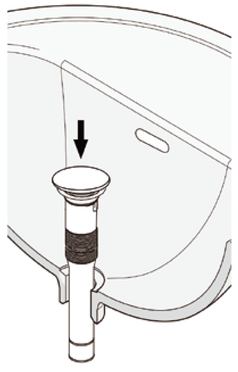

3 Screw components A & B back on as shown.

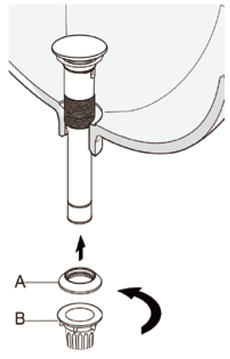

4 Connect the rear end of the drain to the Drain Pipe.

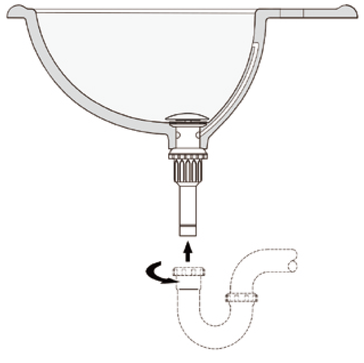

5 Push to activate.

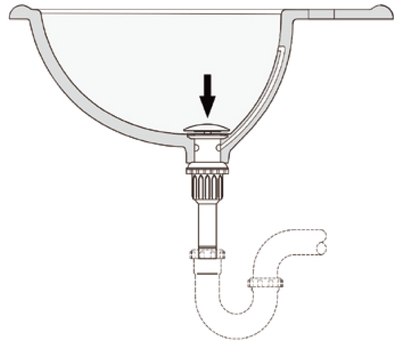

1.Place the faucet into the sink hole.

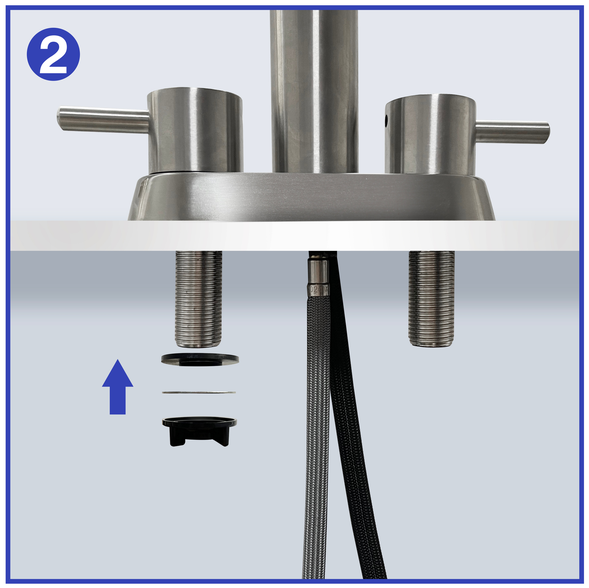

2.Put the rubber gasket, steel washer and the nut in sequence upward.

5.Install the other side of the supply hose to the angle vale.

6.Clasp the weight to the "Weight Here" label.

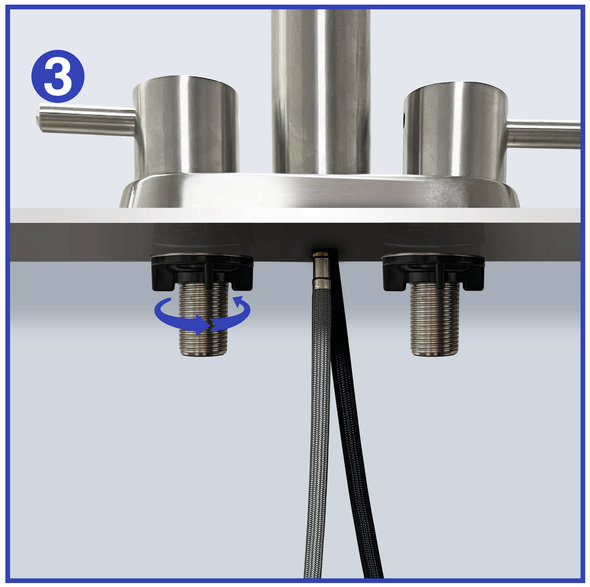

3.Tighten the plastic nut on both sides.

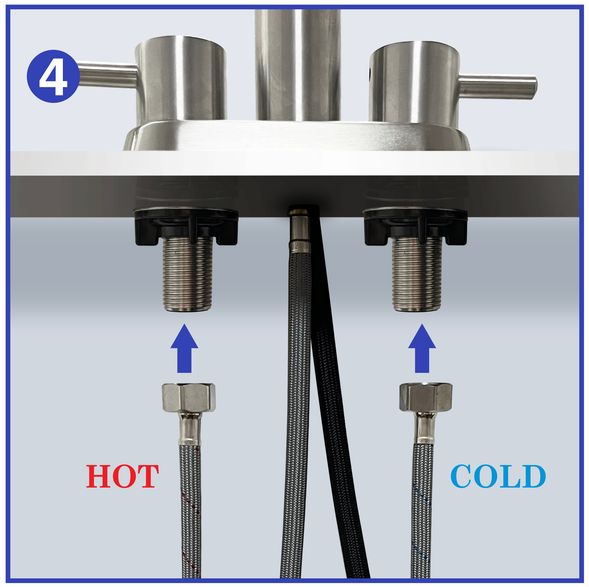

4. Install the water supply hose. (Hot hose on the left side and cold hose on the right side.)

WARM TIPS:

1. Flush the block and the water supply pipes thoroughly before installation.

2. Avoid sharp objects and acidic detergent on the surface of the faucet.

3. Clean the surface of the faucet regularly.

If you have any problem with this purchase, please contact with us any time. We will try our best to solve your problem.
(Email:dlem@pobosales.com)

Customer Service Team

WARNING:

This is not a toy, To avoid danger , keep this plastic bag away from babies and children. Keep the extra accessories.