# Expandable TV Cabinet

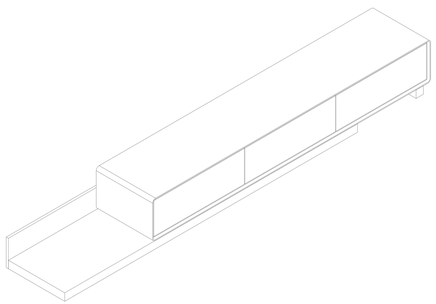

A x 1

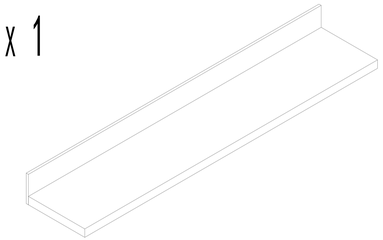

B x 1

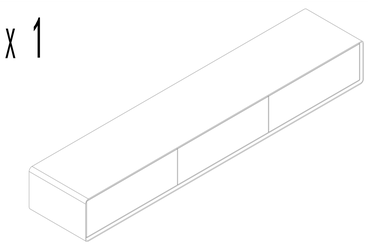

C x 1

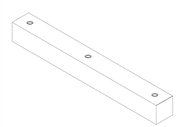

D x 1

Wrench

E x 3

Inner Hexagon Screw

## Step 1

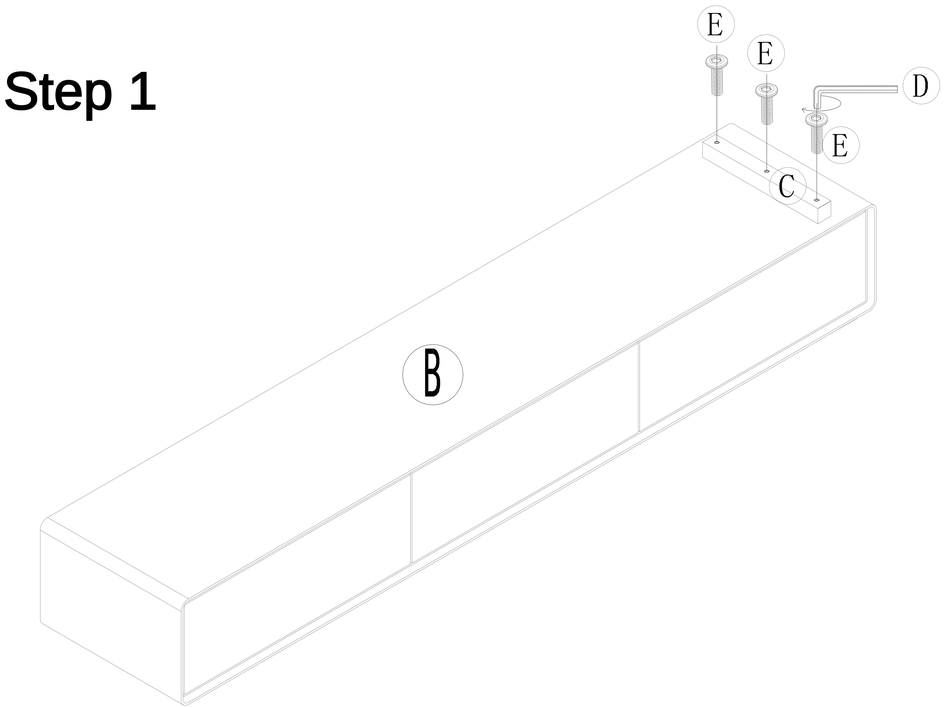


## Step 2

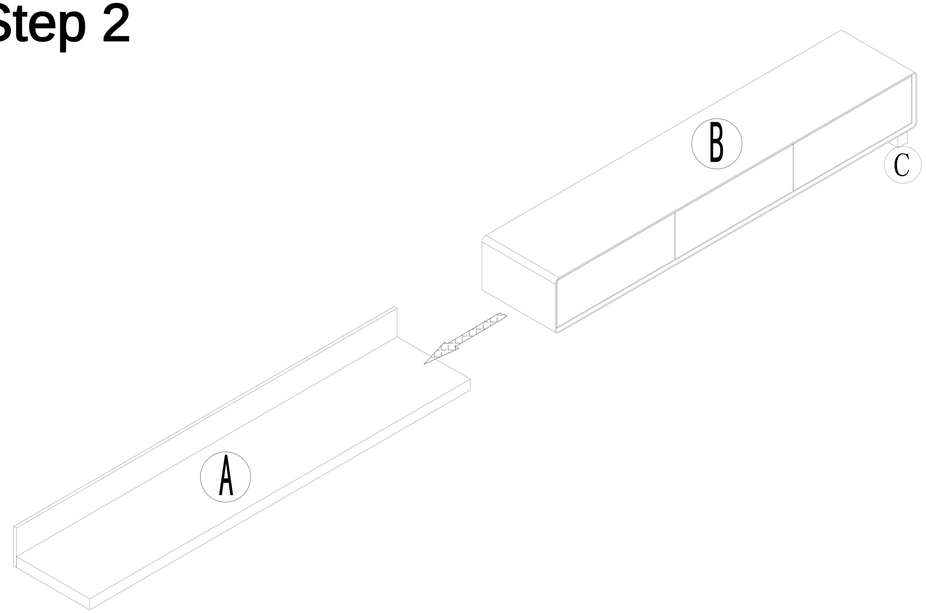

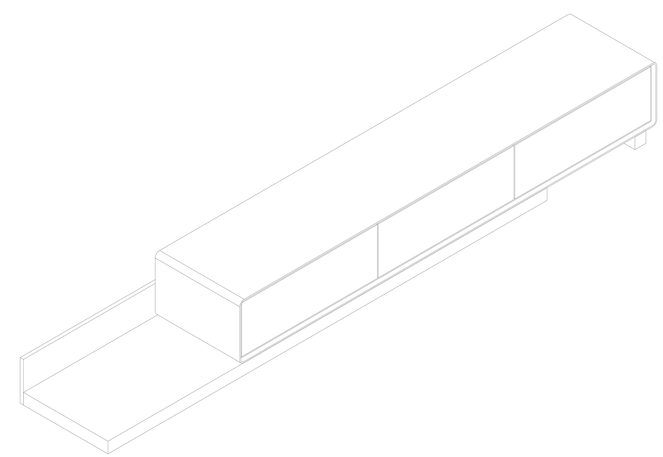
## Step 3