9

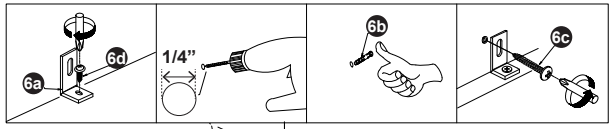

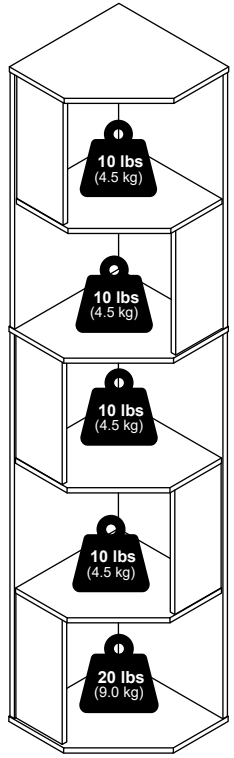



Furinno®

Fits Space, Fits Budget





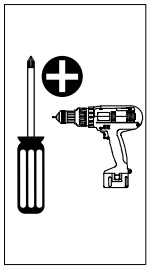

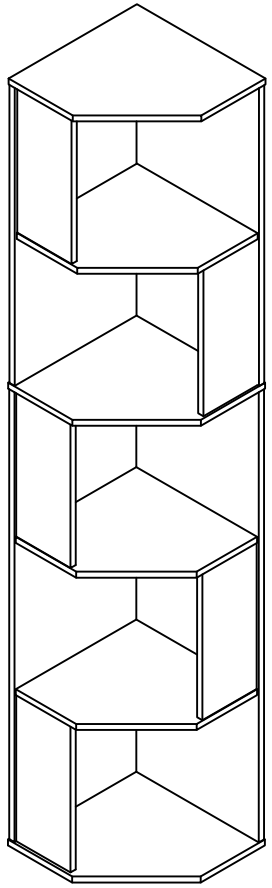

MODEL: 24335

support@furinno.com

www.furinno.com

2433520241008

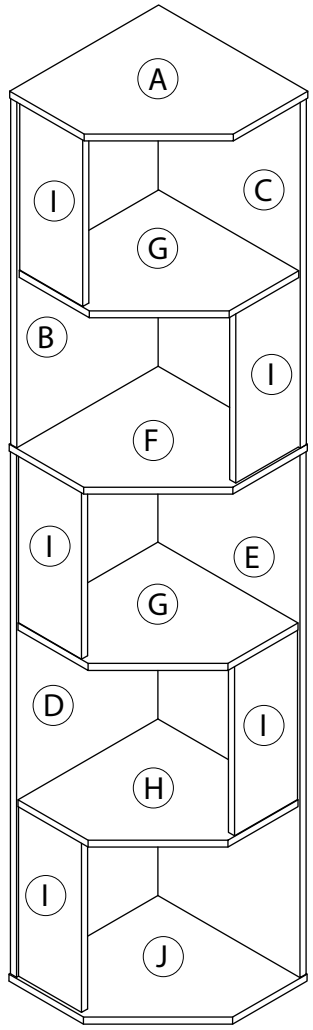

1 x 31  M4 x 32mm	**2** x 8  15mm	**3** x 8 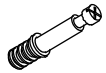 8 x 24mm
4 x 30  M6 x 20mm	**5** x 4  M5 x 40mm	**6** x 2 6a  16 x 28mm 6b  1 1/4” 6c  #8 x 1” 6d  4 x 11mm

8

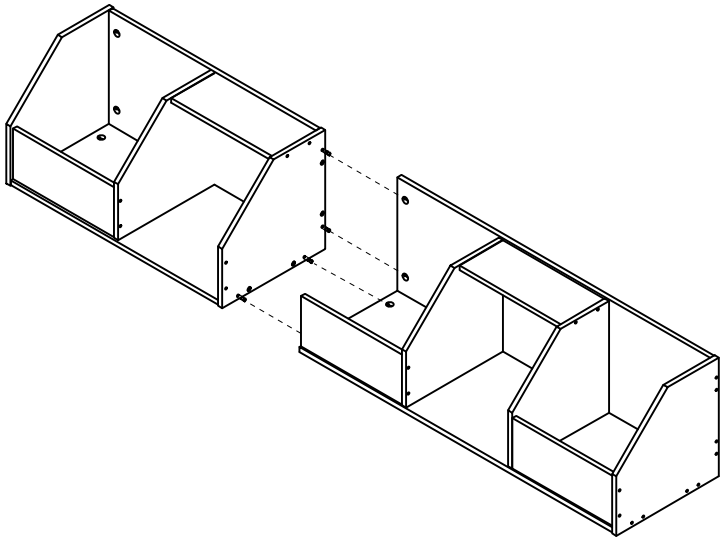

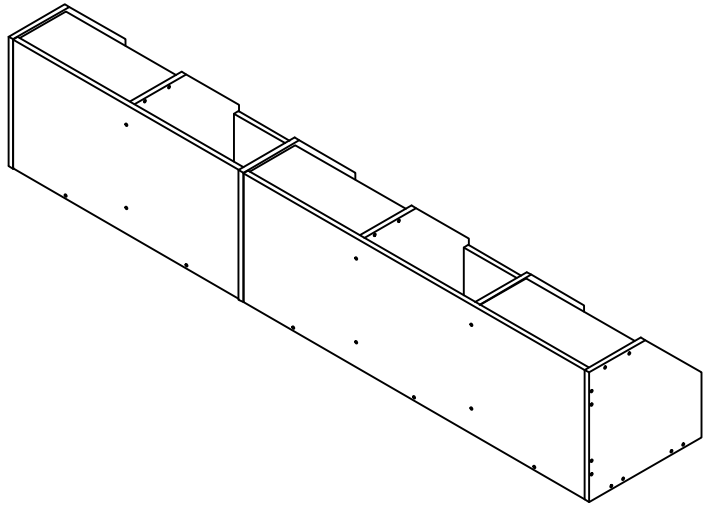

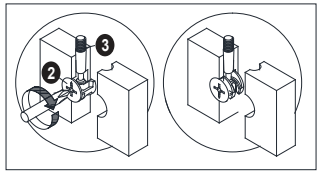

7

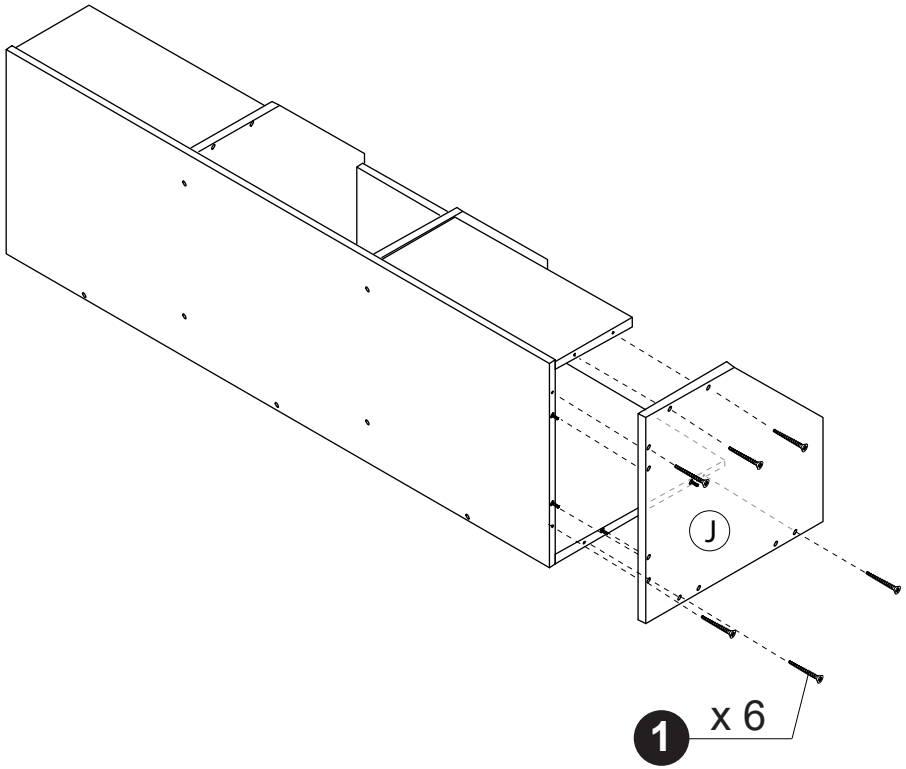
J
1 x 6

1

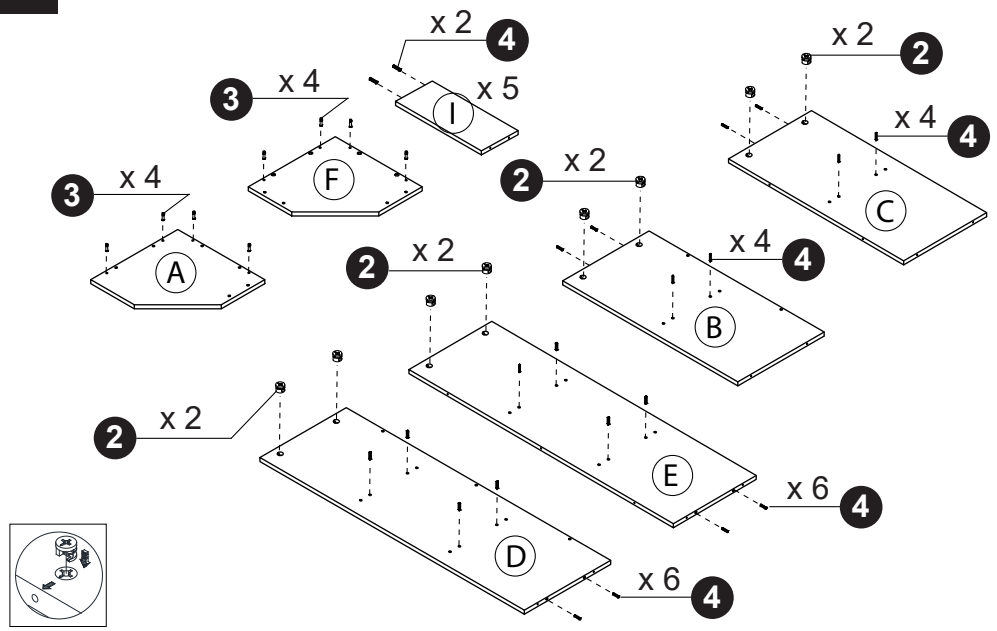
x 2
4
I
x 5
3 x 4
F
x 2
2
x 4
4
C
3 x 4
A
2 x 2
x 4
4
B
2 x 2
E
x 6
4
2 x 2
D
x 6
4

2

2.1

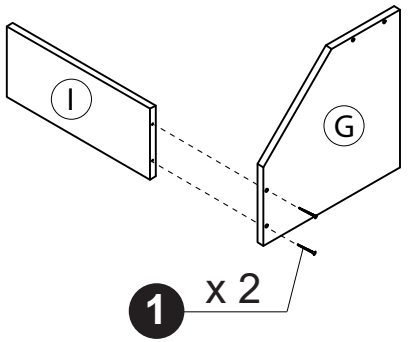
I
G
1 x 2

2.2

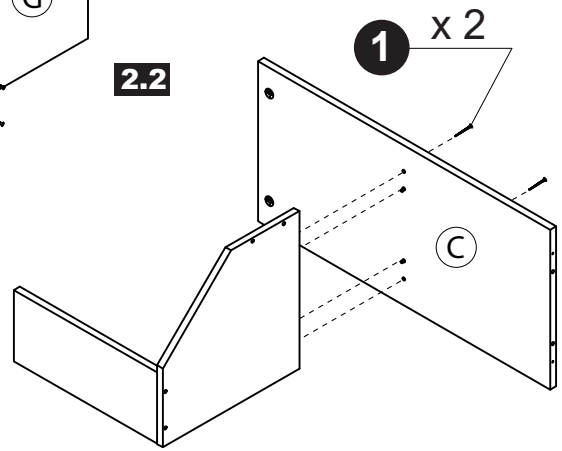
1 x 2
C

3

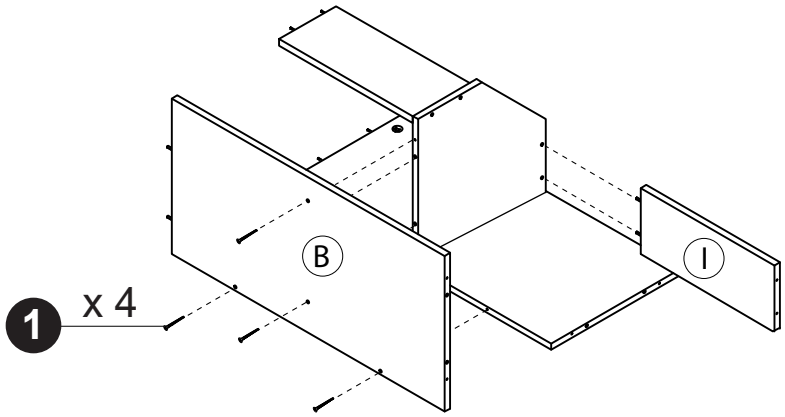

4

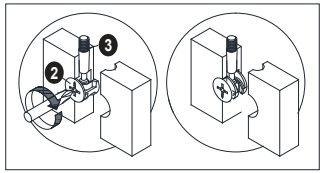

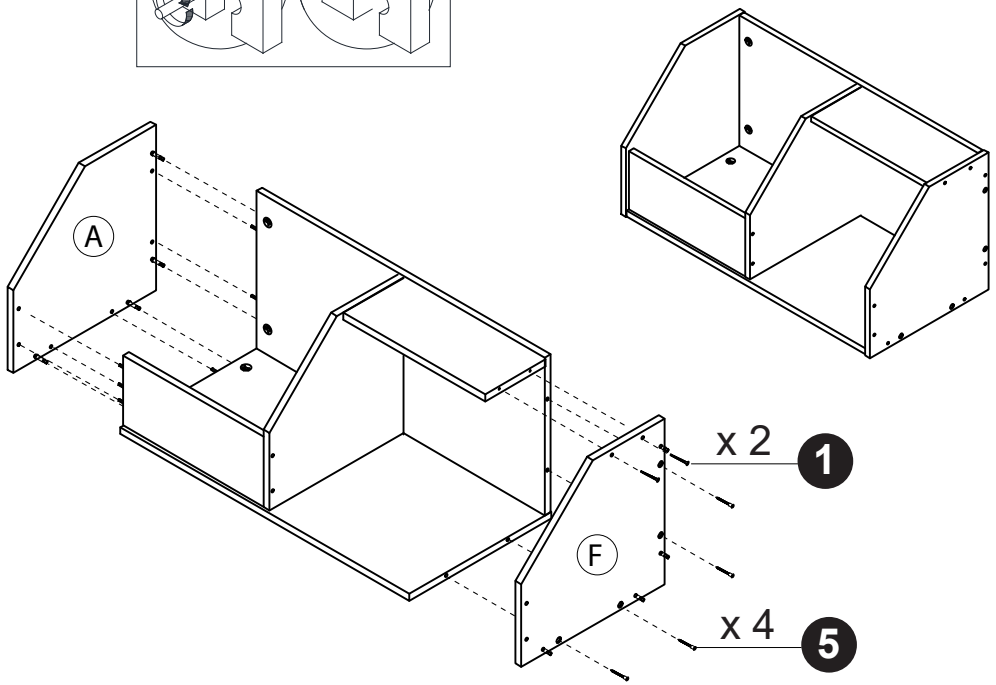

5

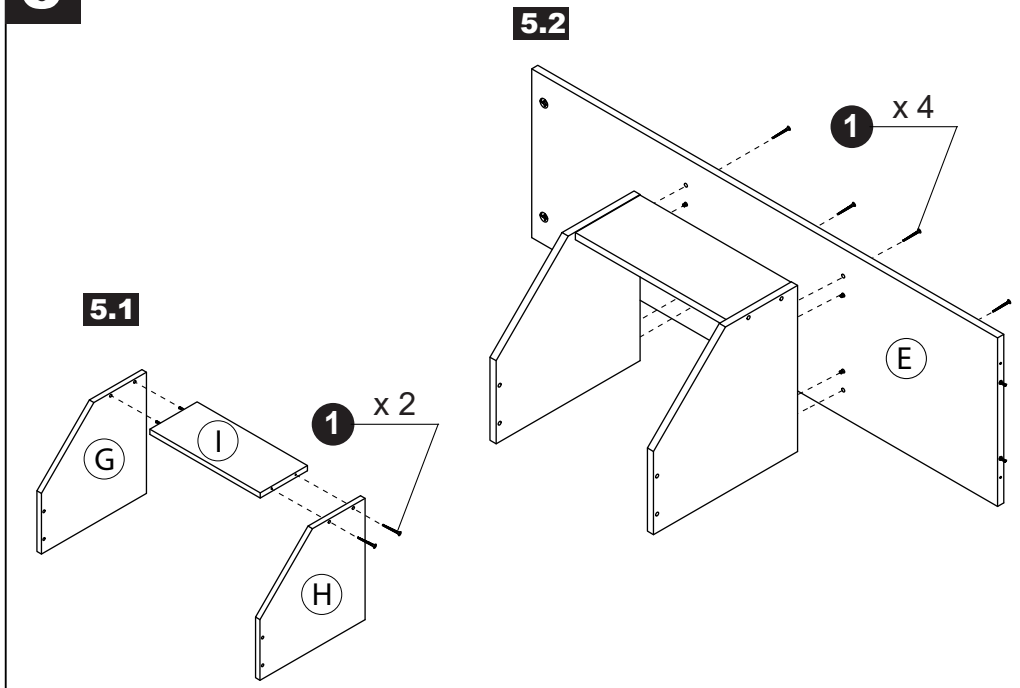

6

