# ASSEMBLY AND INSTALLATION INSTRUCTIONS

**WARNING:** TO AVOID RISK OF ELECTRICAL SHOCK, BE SURE TO SHUT OFF POWER BEFORE INSTALLING OR SERVICING THIS FIXTURE.

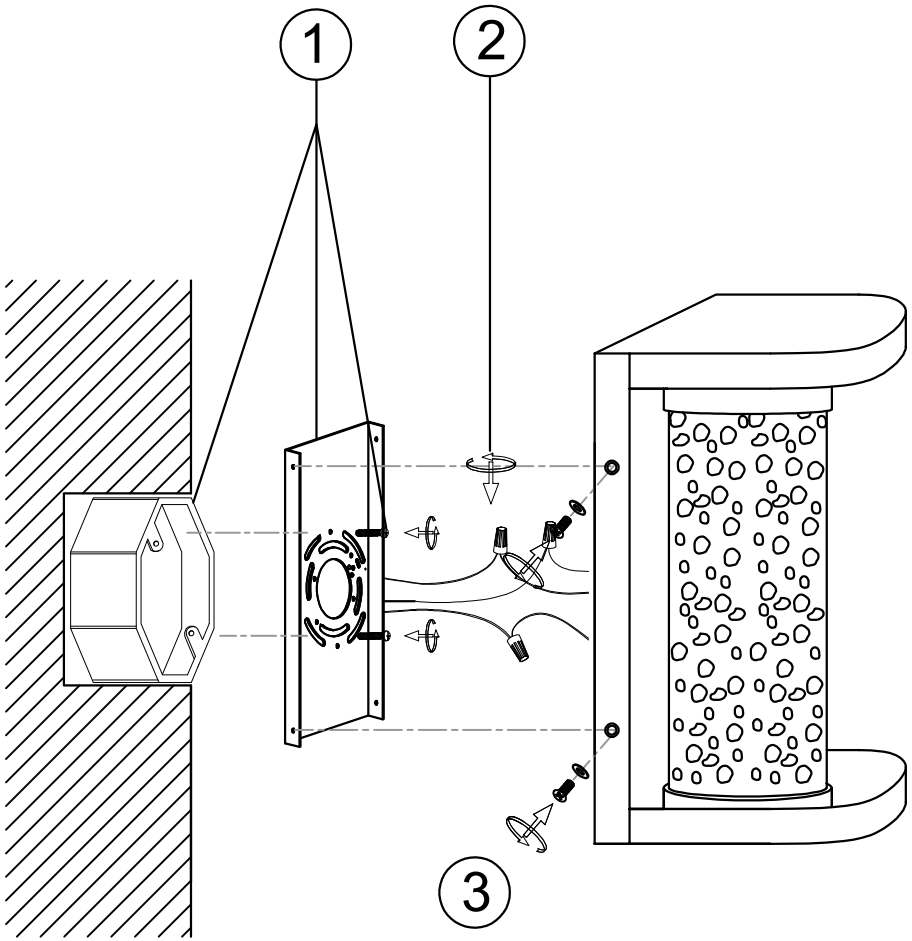


## Before You Begin:

- Ensure power is turned off at the circuit breaker before installation.
- Read all instructions carefully.
- Installation should be performed by a qualified electrician if you are unfamiliar with wiring.

## Step-by-Step Installation:

1.Secure the mounting plate inside the junction box using the mounting screws.
2.Wiring Connections
·Use wire connectors to connect the black (hot) wire to the black wire, the white (neutral) wire to the white wire, and the ground wire to the grounding terminal.
·Ensure no exposed conductors remain outside wire connectors or outside the junction box.
3.Attach the fixture body to the mounting plate with the screws.
4.Turn on the power and verify that the light is working normally.
Installation is complete.

## Safety Instructions:

**To avoid fire, shock, and serious personal injury, follow all instructions carefully.**
1. Do not install or use the light fixture if any part is missing or damaged.
2. To avoid possible electrical shock, be sure electricity is turned off at the main fuse or circuit breaker box before wiring.
3. Make certain no bare wires are exposed outside the wire connectors.
4. All wiring must conform to national and local electrical codes.
5. Follow the recommended instructions for the proper method of wiring your new light fixture. If you feel you do not have enough electrical wiring knowledge or experience, have your light fixture installed by a licensed electrician. Any electrical work not described in this manual should be performed by a licensed electrician.