# ASSEMBLY INSTRUCTION

ITEM NUMBER:M479
SIZE: KING

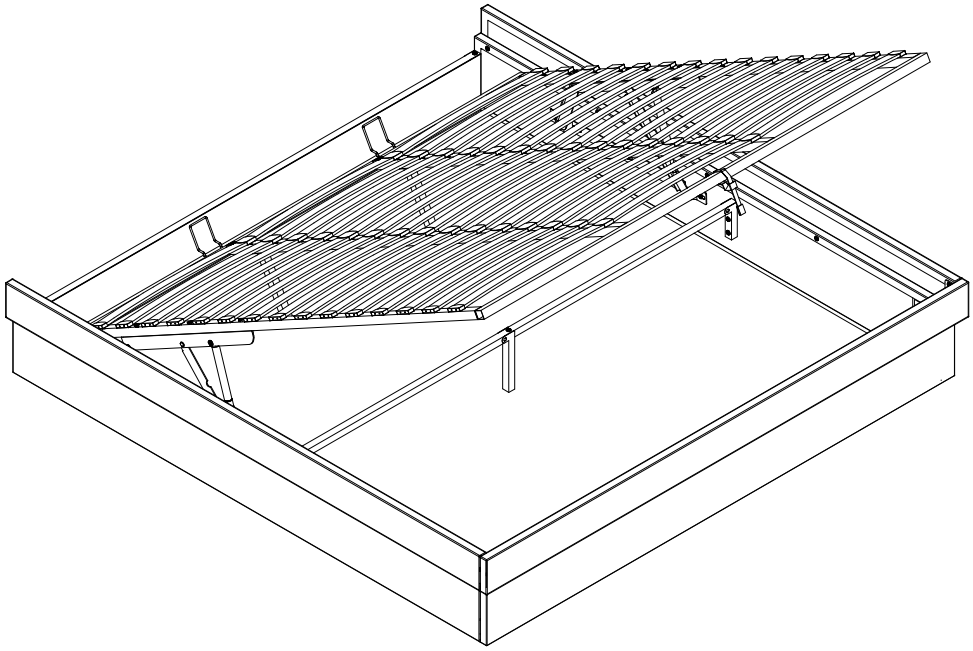

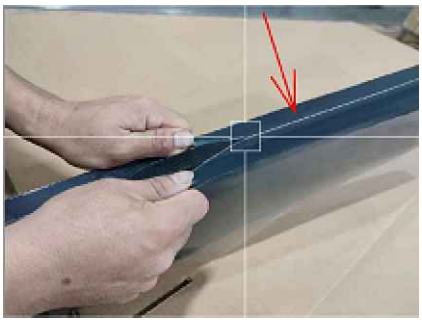

Please TEAR OFF this shrink film from side!
DO NOT USE CUTTER!

## IMPORTANT NOTE

1. FOR THE PROTECTION OF YOUR FURNITURE, PLACE ALL PARTS ON A CLEAN AND SMOOTH SURFACE TO PREVENT ANY DAMAGE.
2. DO NOT USE POWER TOOLS TO ASSEMBLE THE BEDSIDE TABLE.
3. PLEASE PERIODICALLY CHECK ALL FITTINGS AND RE-TIGHTEN AS NECESSARY.
4. DO NOT USE THE BEDSIDE TABLE UNLESS ALL BOLTS AND SCREWS ARE FIRMLY SECURED.
5. NEED PARTS OR ASSISTANCE? EMAIL US AT kjbed@outlook.com
6. YOU CAN ASSEMBLE IT WITH OUR PACKAGING TOOLS OR WITH A.

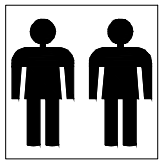

Minimum two person assembly

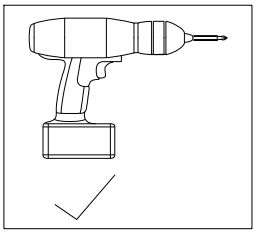

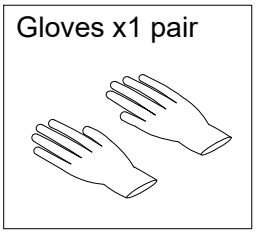


Please note gloves.
This fabric is very light colour.
So when assembling bed,
please wear them.

PART LIST

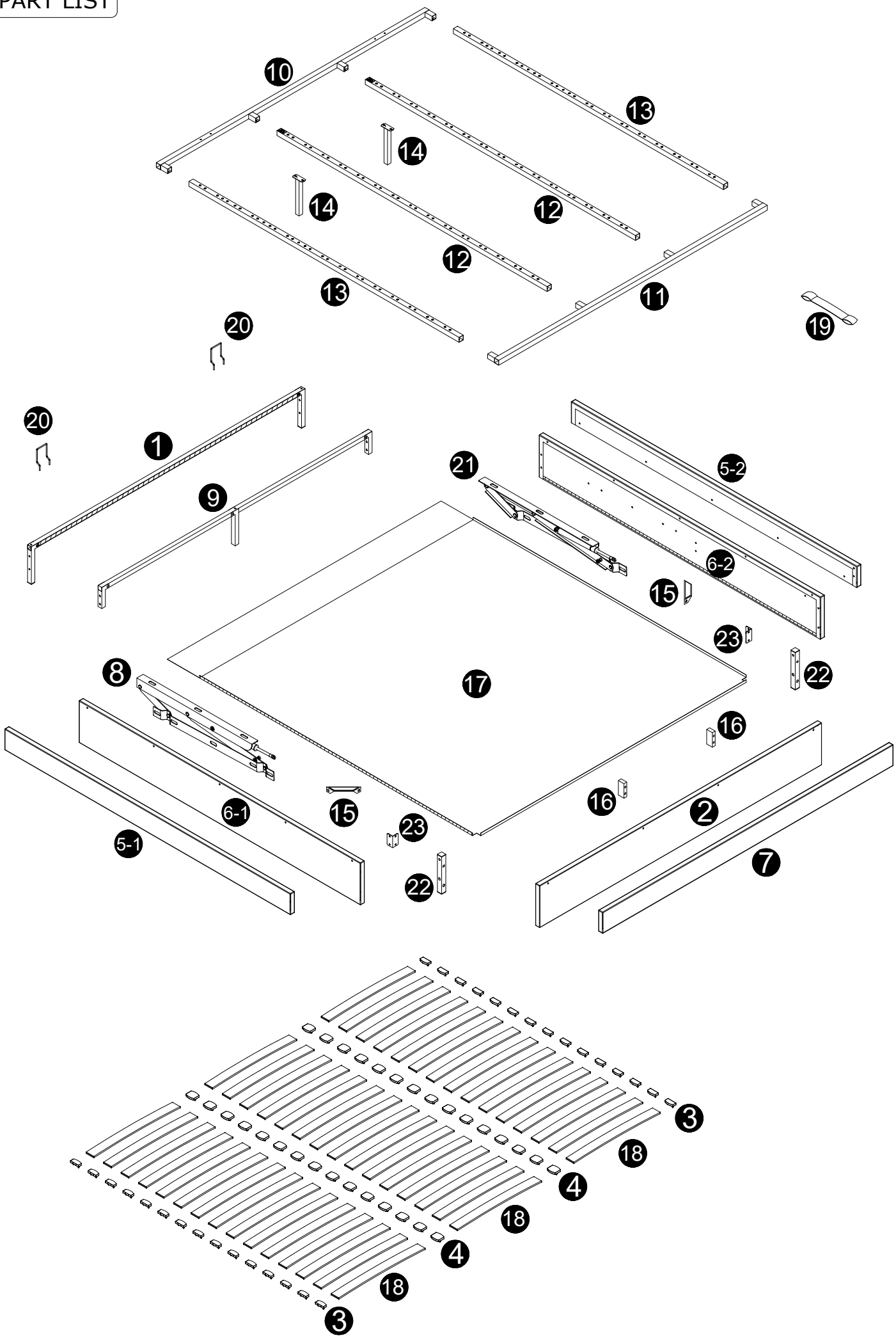
10
13
14
14
12
12
13
11
19
20
20
1
9
21
5-2
6-2
15
23
22
8
17
16
16
6-1
15
23
22
5-1
2
7
3
18
4
18
4
18
3

## PART LIST

| | | | | |
|---|---|---|---|---|
| ❶ X 1PC 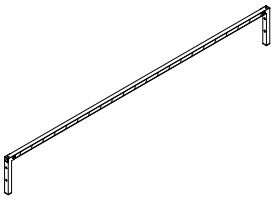 | ❷ X 1PC 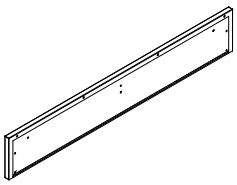 | ❸ X 30PCS 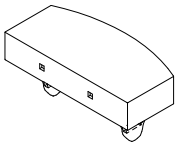 | ❹ X 30PCS 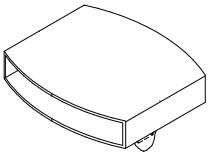 | ❺-❶ X 1PC 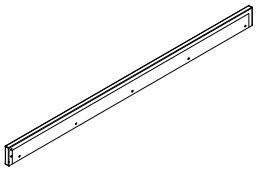 |
| ❺-❷ X 1PC 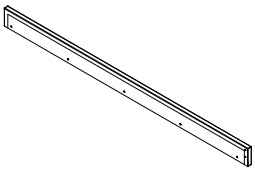 | ❻-❶ X 1PC 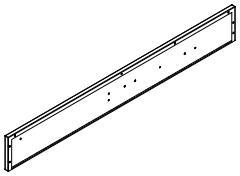 | ❻-❷ X 1PC 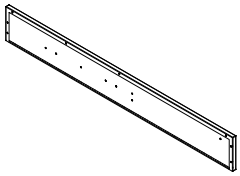 | ❼ X 1PC 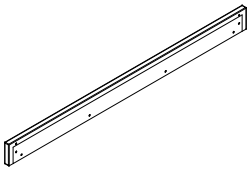 | ❽ X 1PC 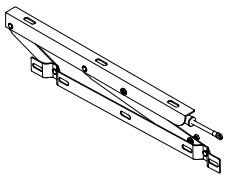 |
| ❾ X 1PC 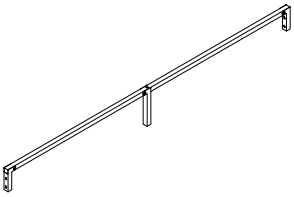 | ❿ X 1PC 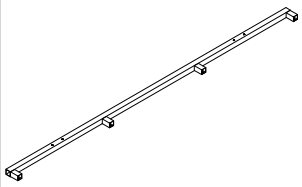 | ⓫ X 1PC 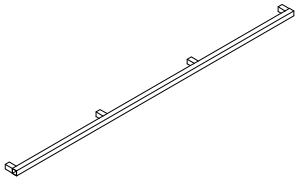 | ⓬ X 2PCS 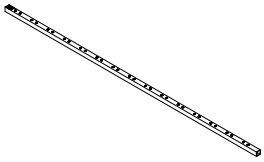 | ⓭ X 2PCS 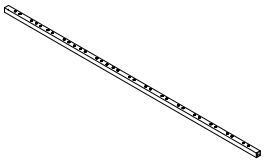 |
| ⓮ X 2PCS 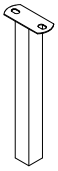 | ⓯ X 2PCS  | ⓰ X 2PCS 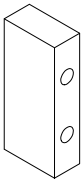 | ⓱ X 1PC 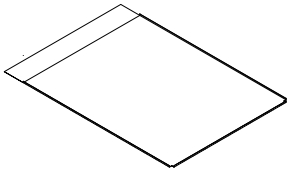 | ⓲ X 45PCS 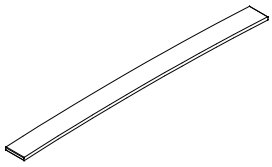 |
| ⓳ X 1PC 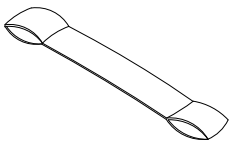 | ⓴ X 2PCS 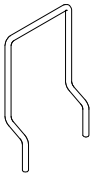 | ㉑ X 1PC 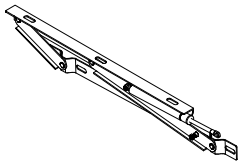 | ㉒ X 2PCS 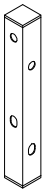 | ㉓ X 2PCS 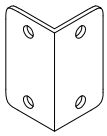 |

## HARDWARE LIST

| | | | | |
|---|---|---|---|---|
| H1 M5 X 1PC  | H2 M8 X 20mm X 20PCS 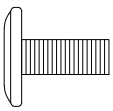 | H3 M8 X 25mm X 22PCS 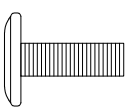 | H4 M8 X 40mm X 8PCS 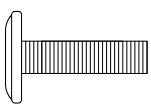 | H5 M8 X 50mm X 30PCS 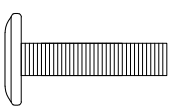 |
| H6 M14 X 1PC  | H7 M8 X 22mm X 14PCS 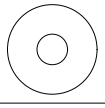 | H8 M8 X 6PCS 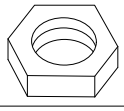 | H9 M8 X 45mm X 5PCS  | |

**Please ensure to thoroughly inspect the small inner cardboard box containing the hardware, which are tied with a red string, before disposing of the box. If you have any assembly issues, missing or wrong parts, or need help,please contact us first via messages. We will solve it for you within 24 hours.**

1

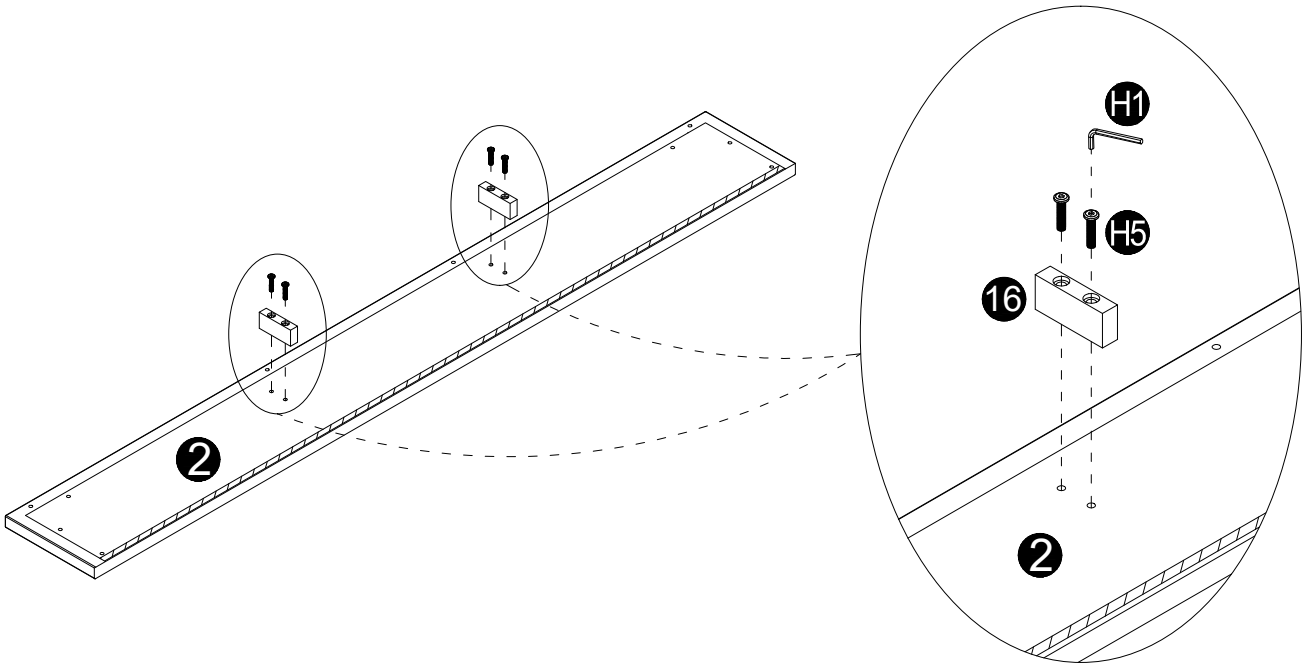


2

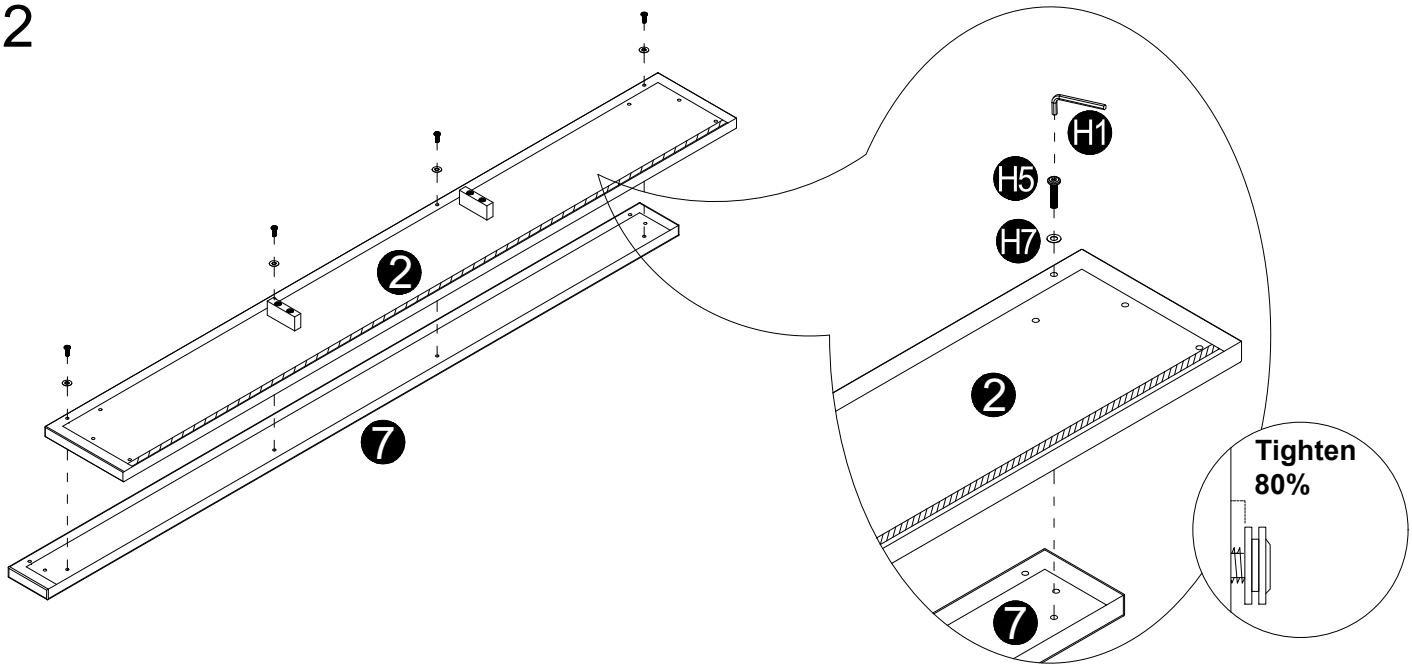


3

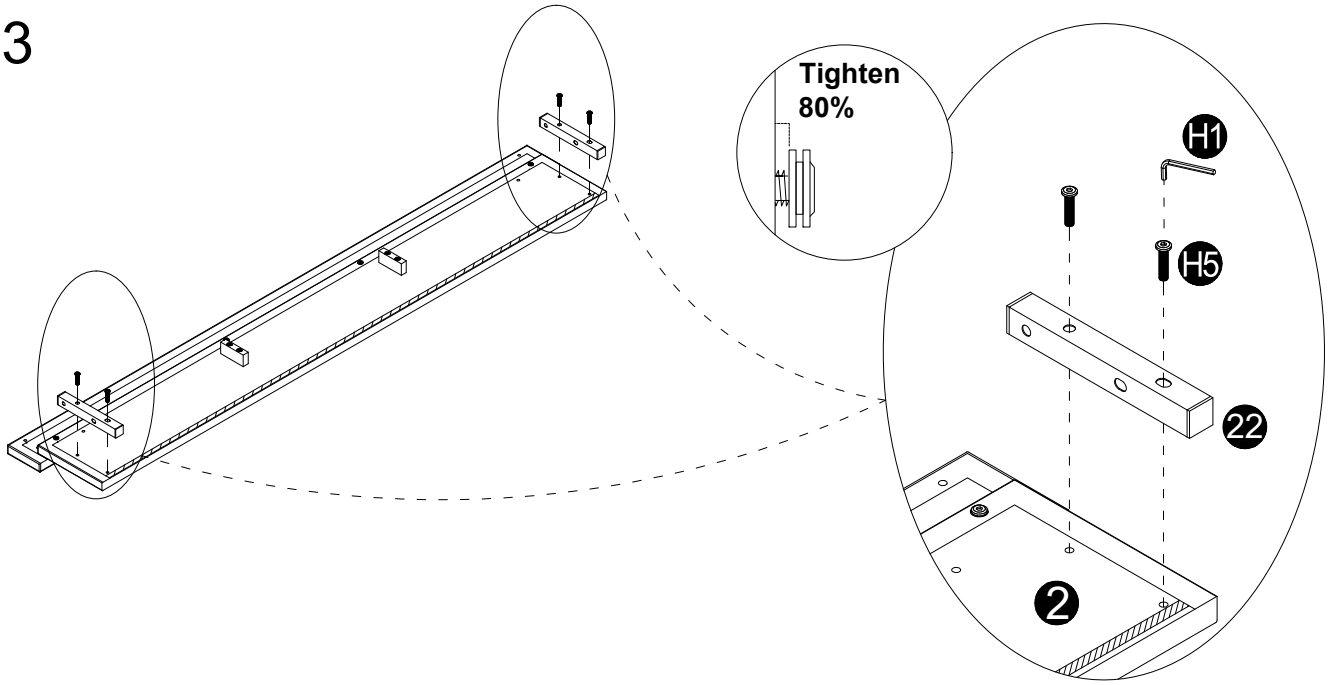

4

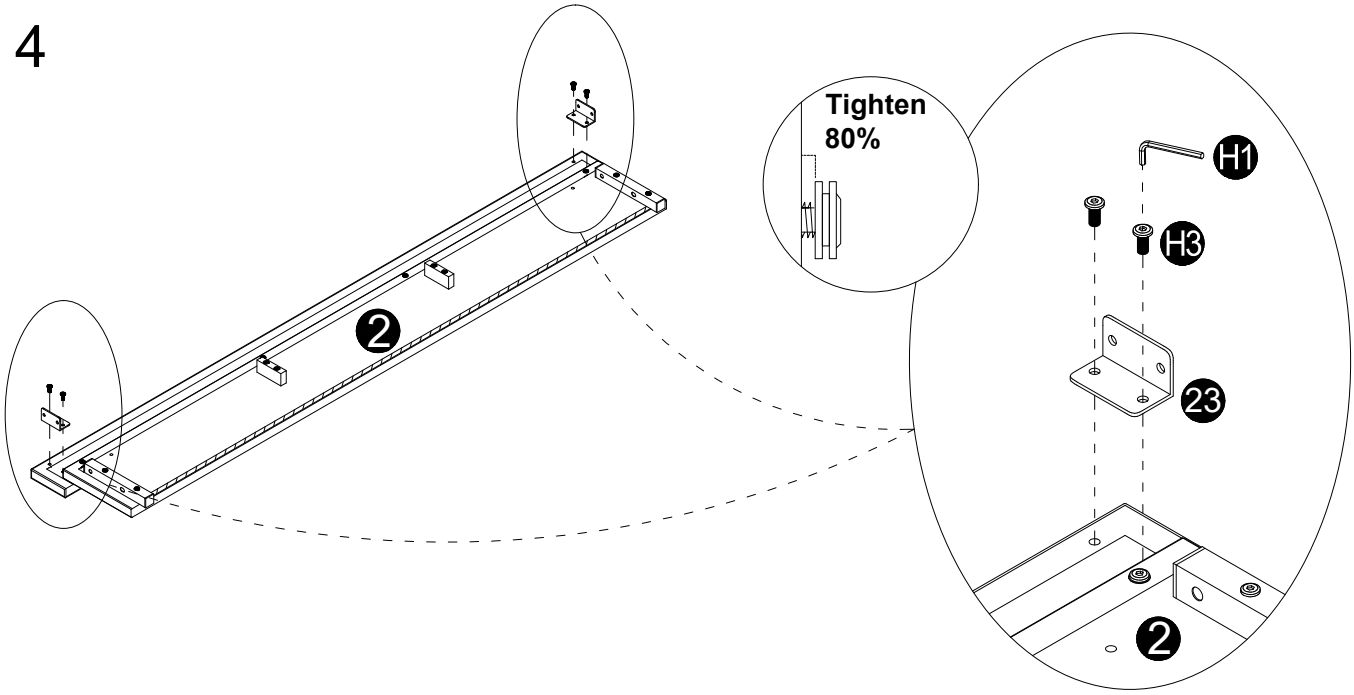
Tighten
80%
H1
H3
23
2
2

5

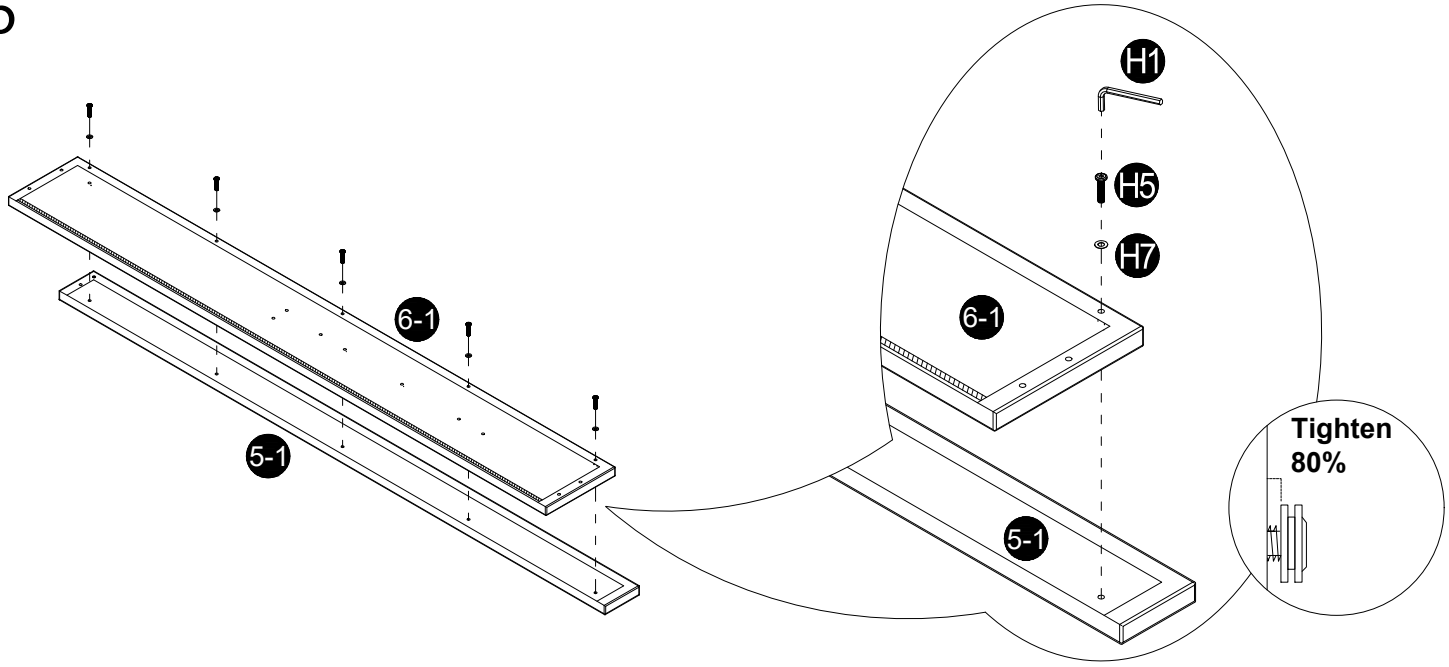
H1
H5
H7
6-1
6-1
5-1
5-1
Tighten
80%

6

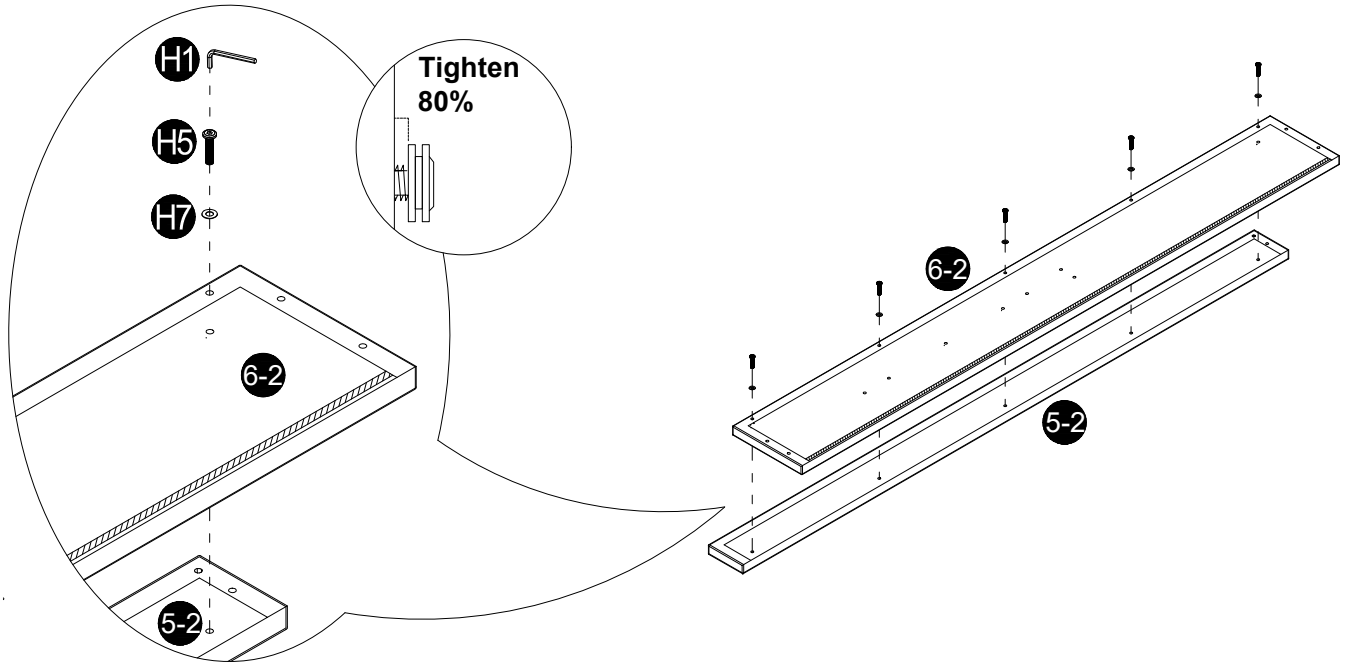
H1
H5
H7
Tighten
80%
6-2
6-2
5-2
5-2

7

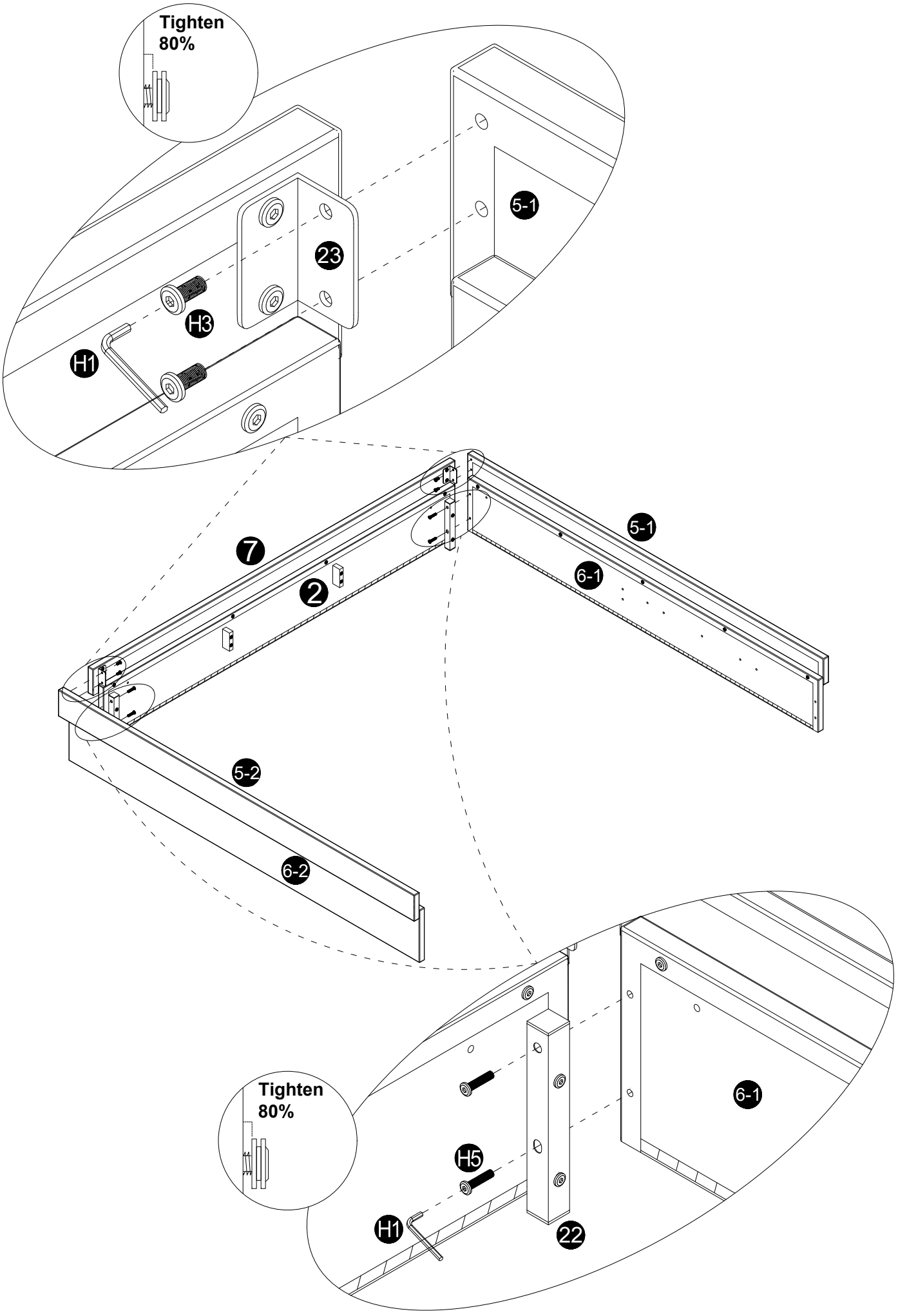

8

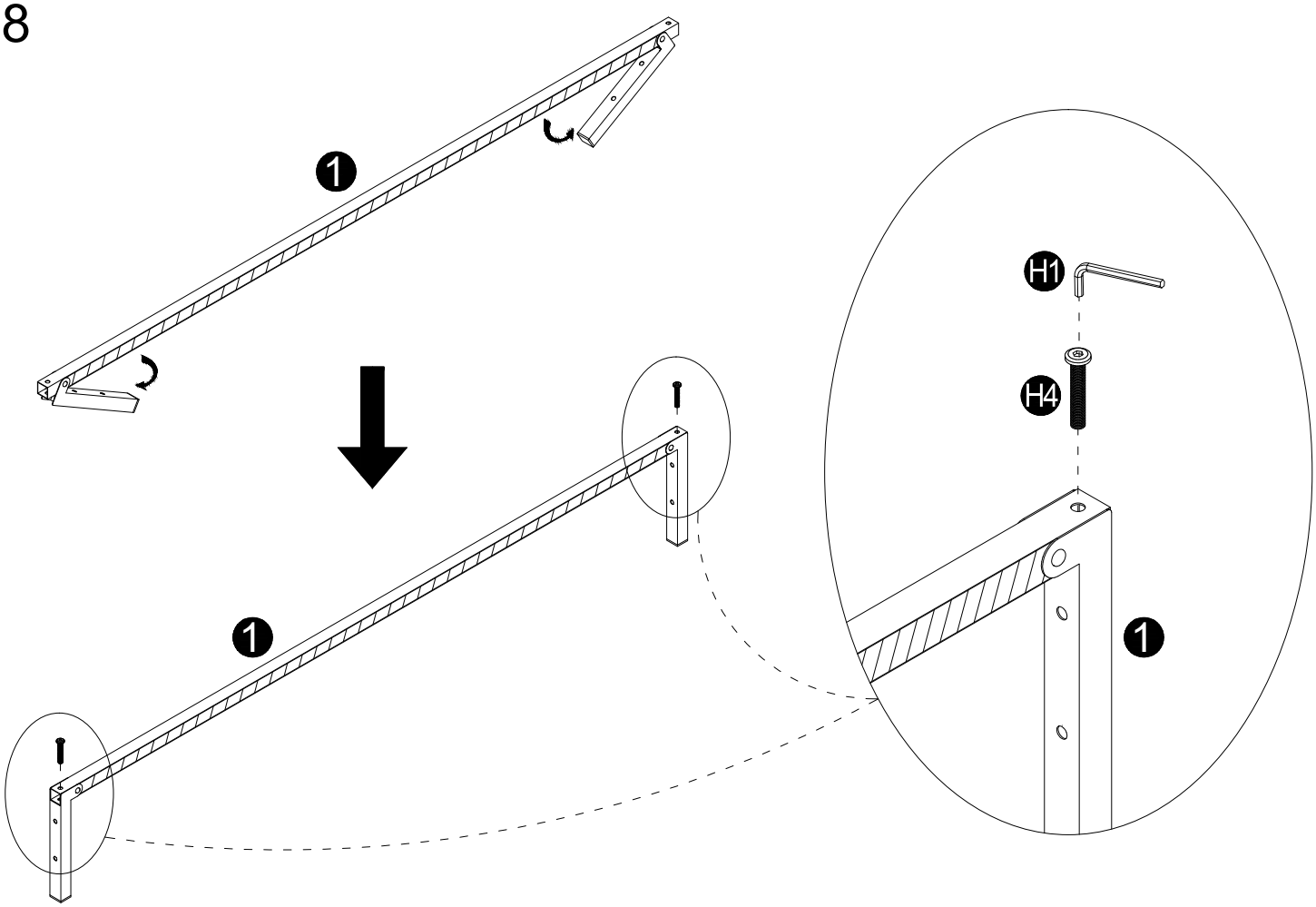


9

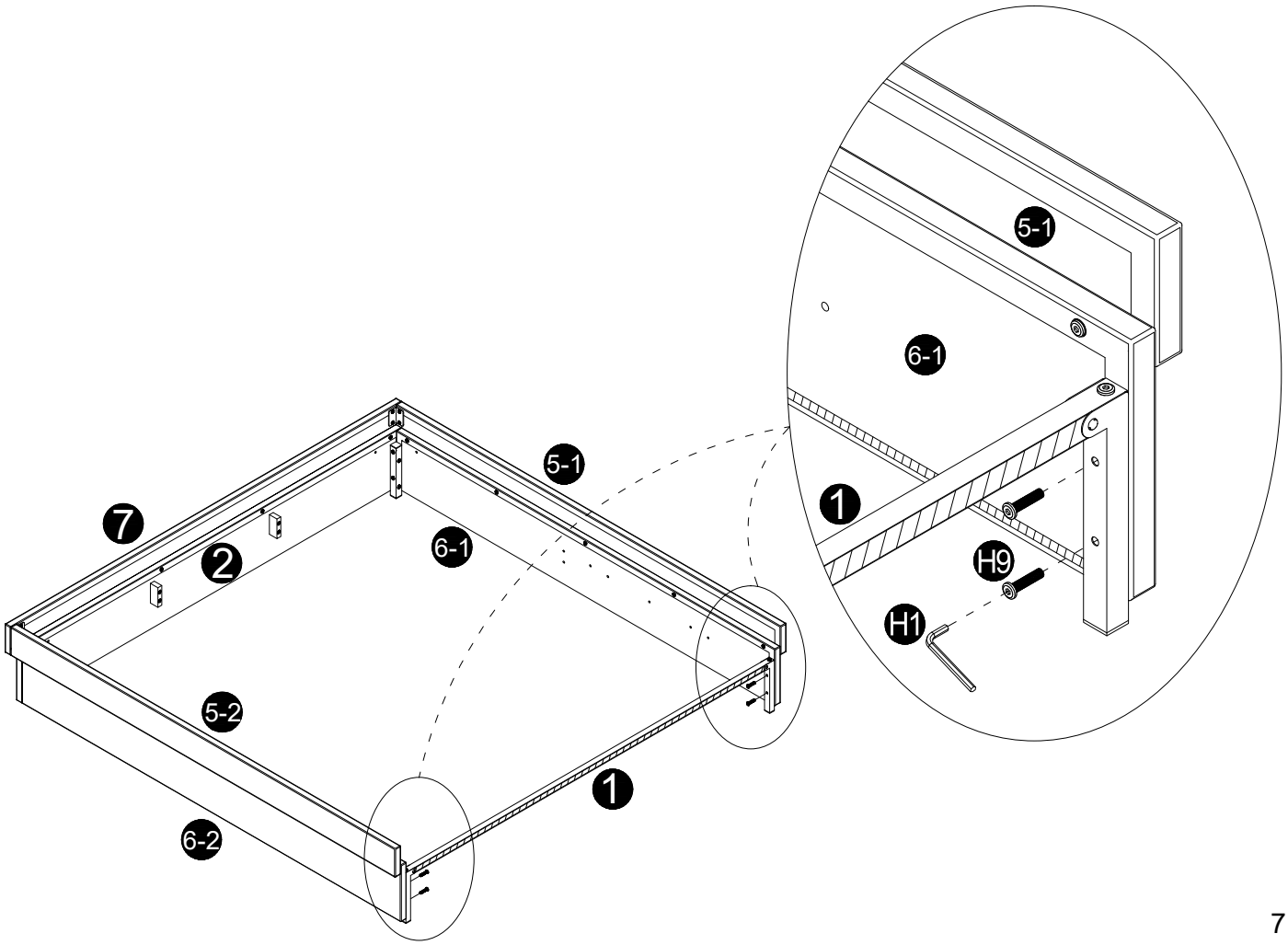

10

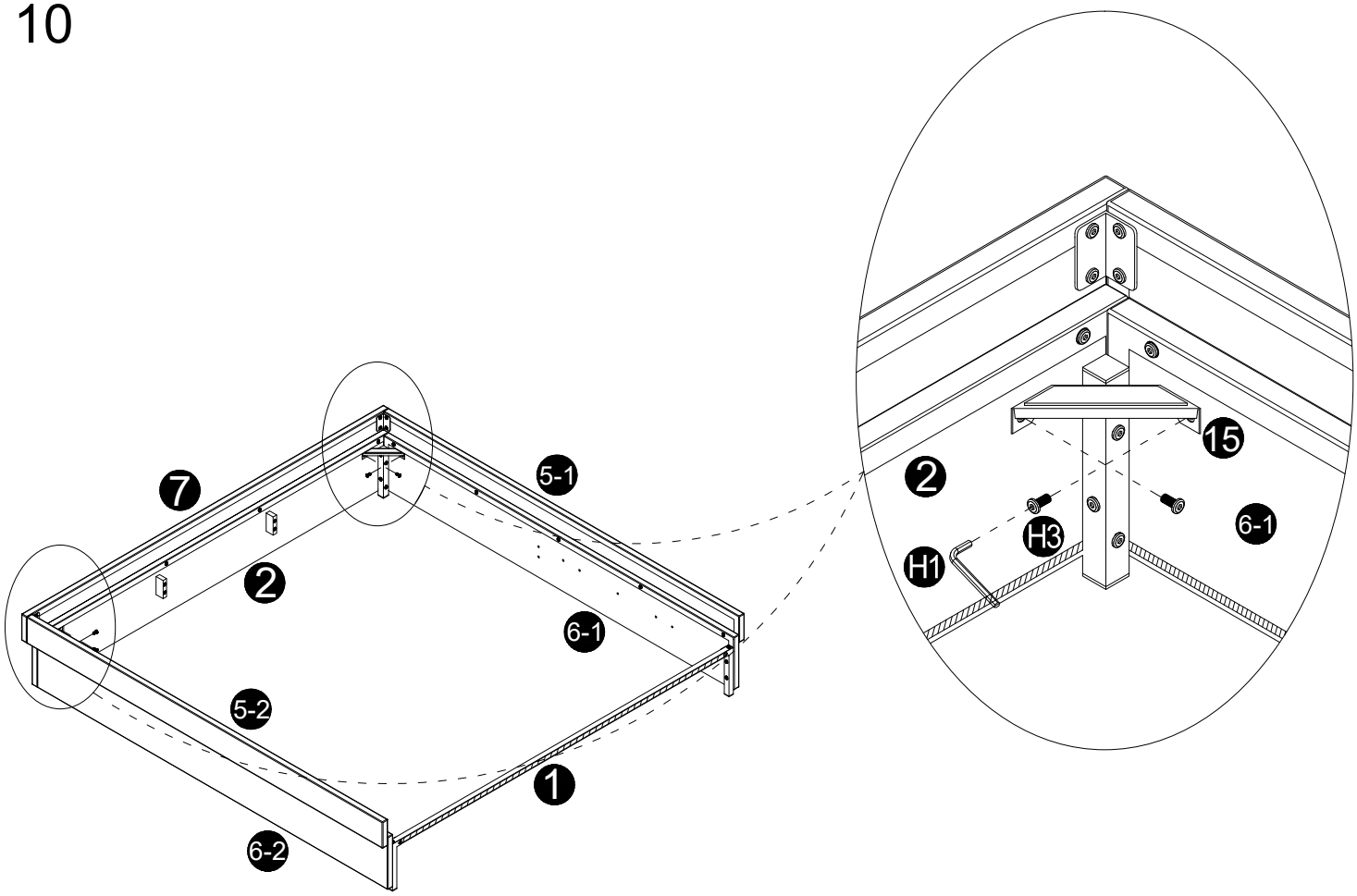


11

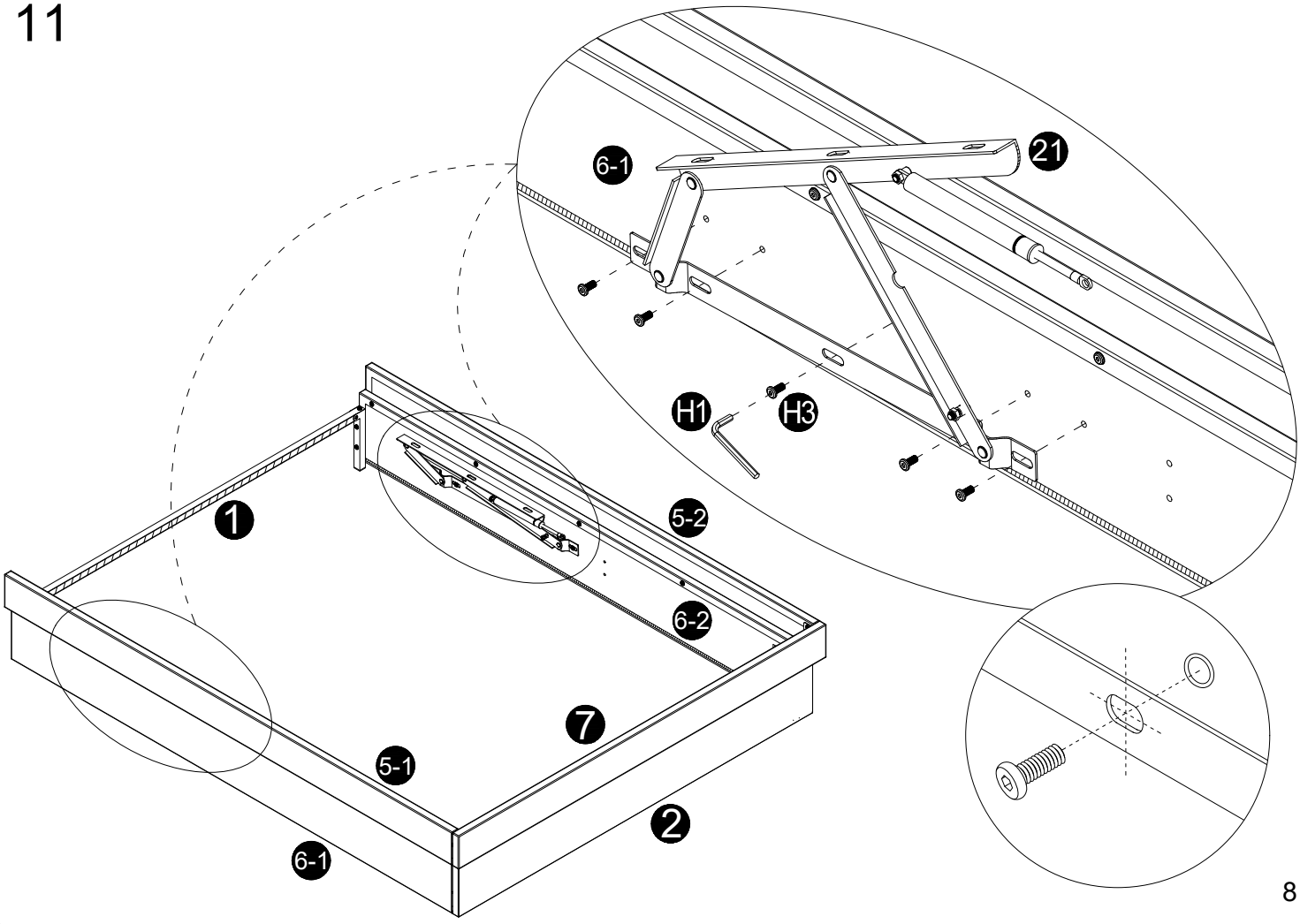

12

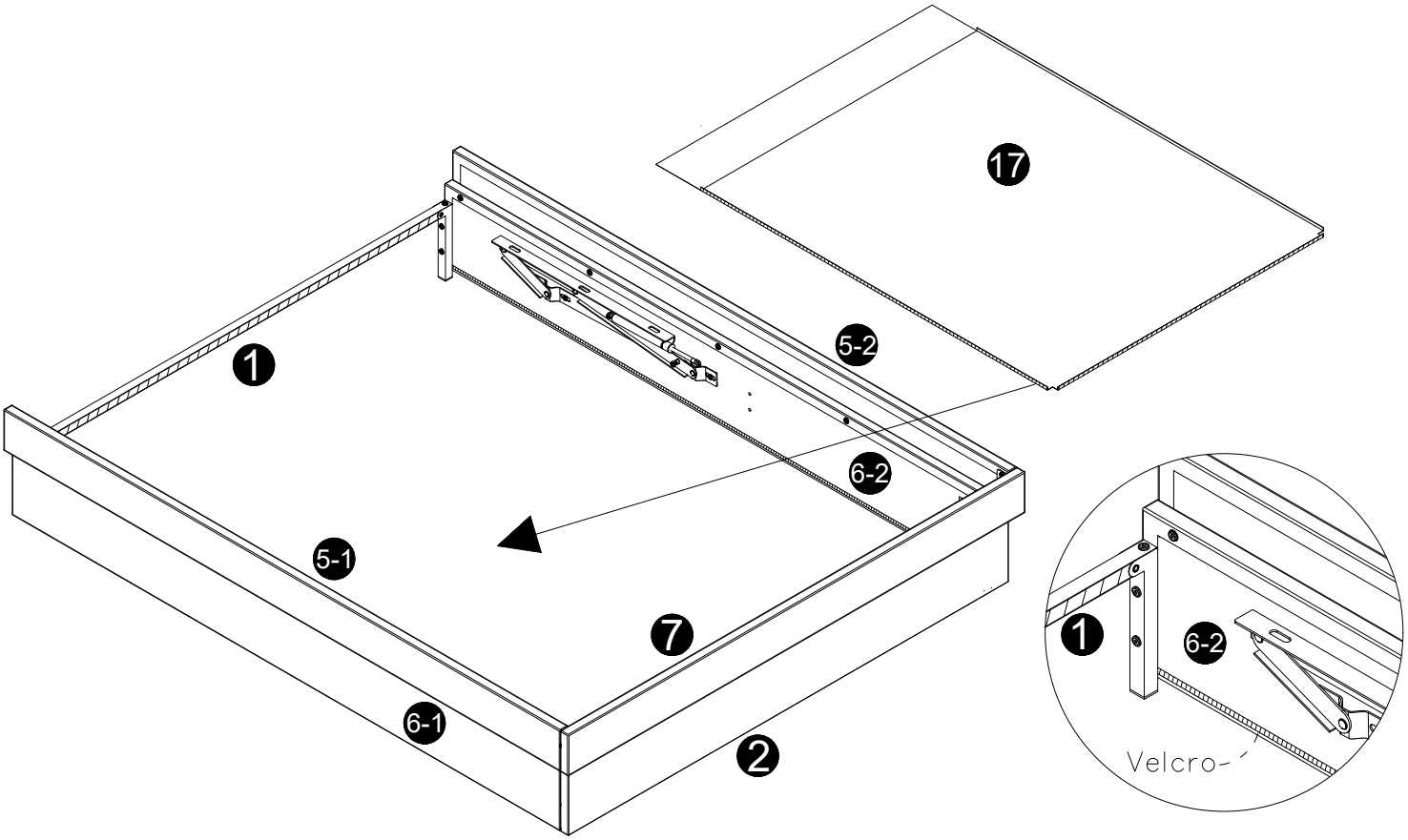


13

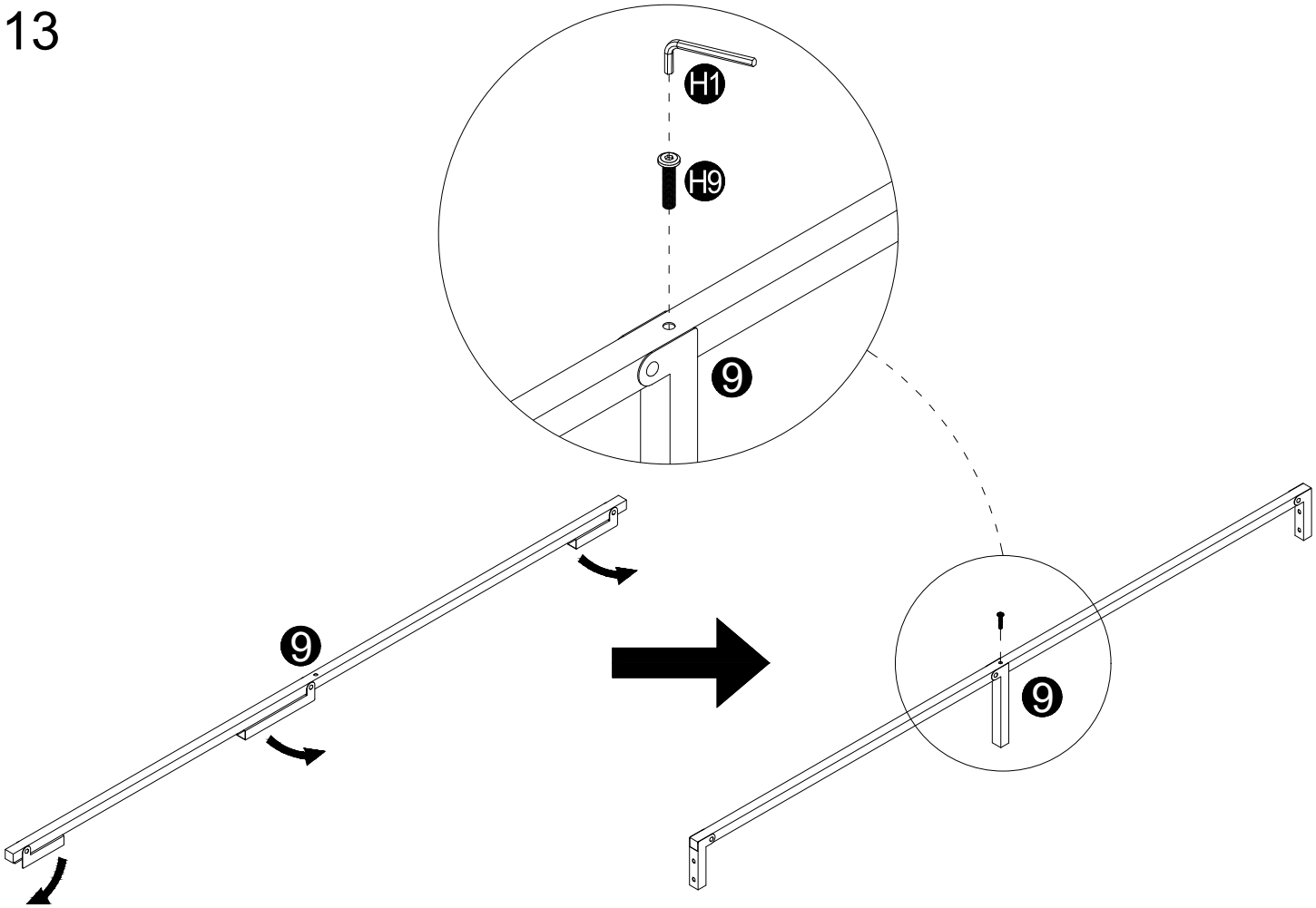

14

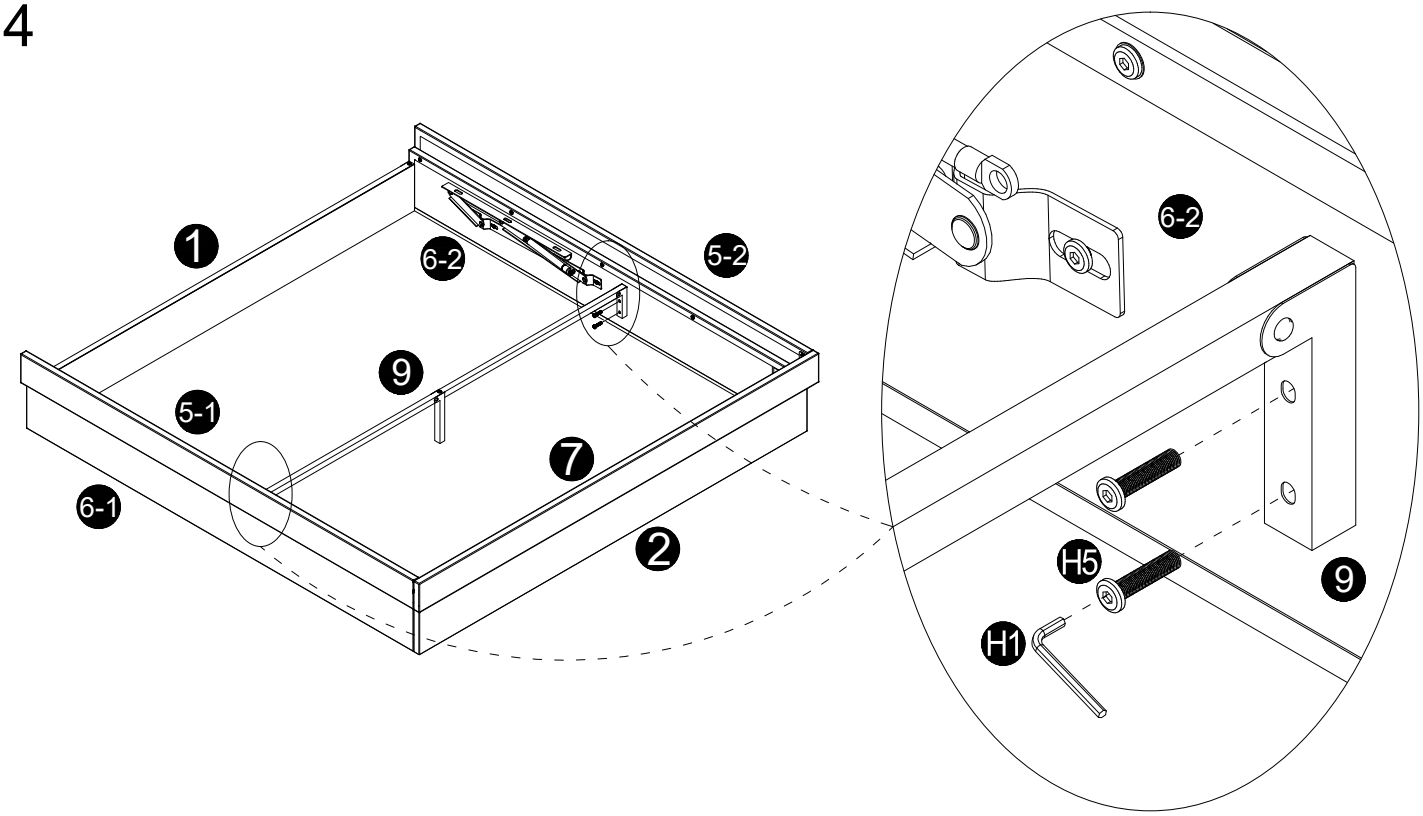


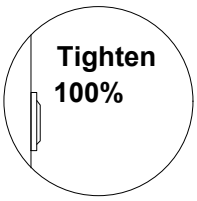


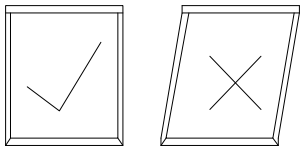

Ensure frame is square

Make certain the bed is squared up as shown in the diagram then tighten all bed assembly bolts 100%.

15

Shown upside down

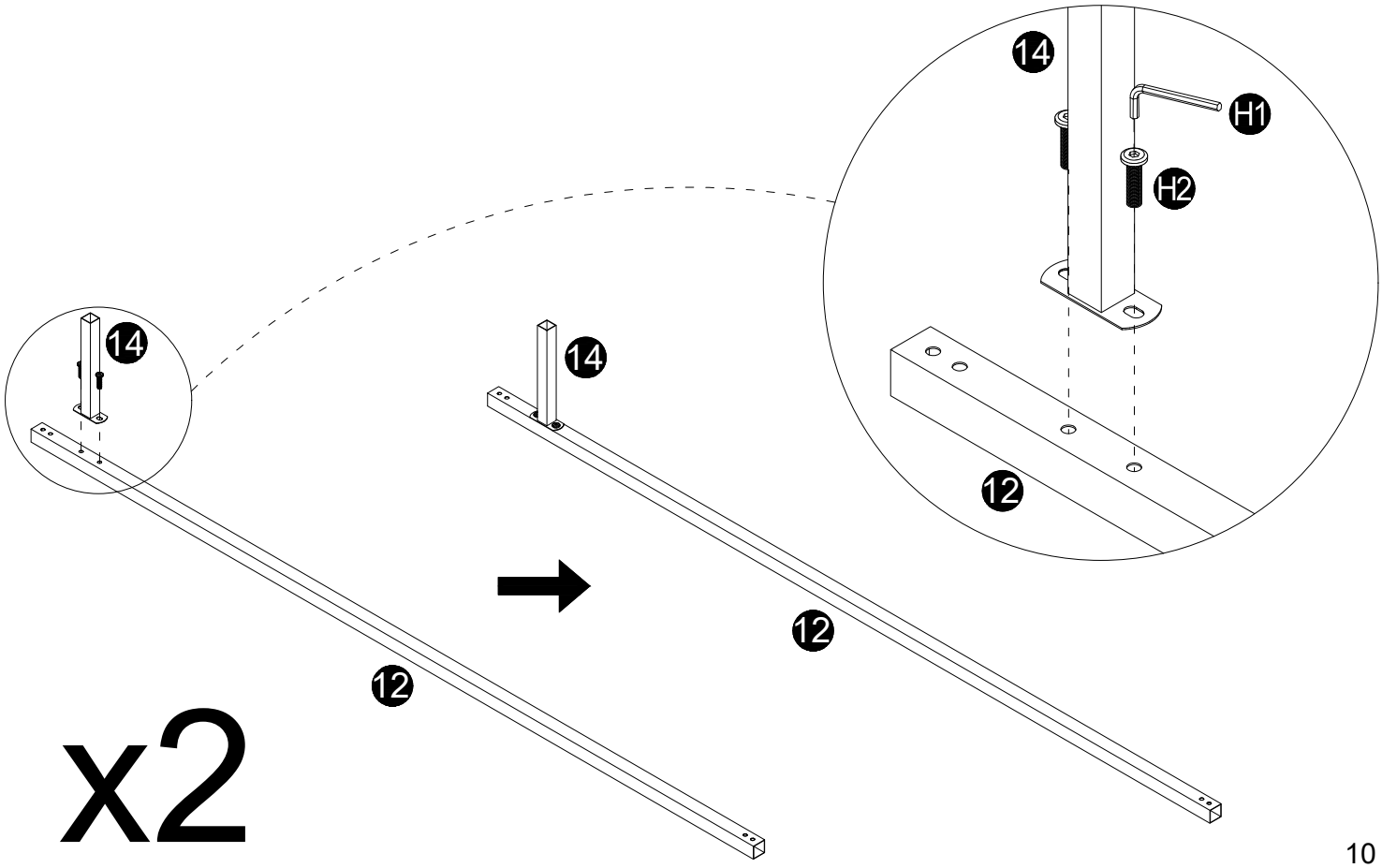


x2

16

Shown upside down

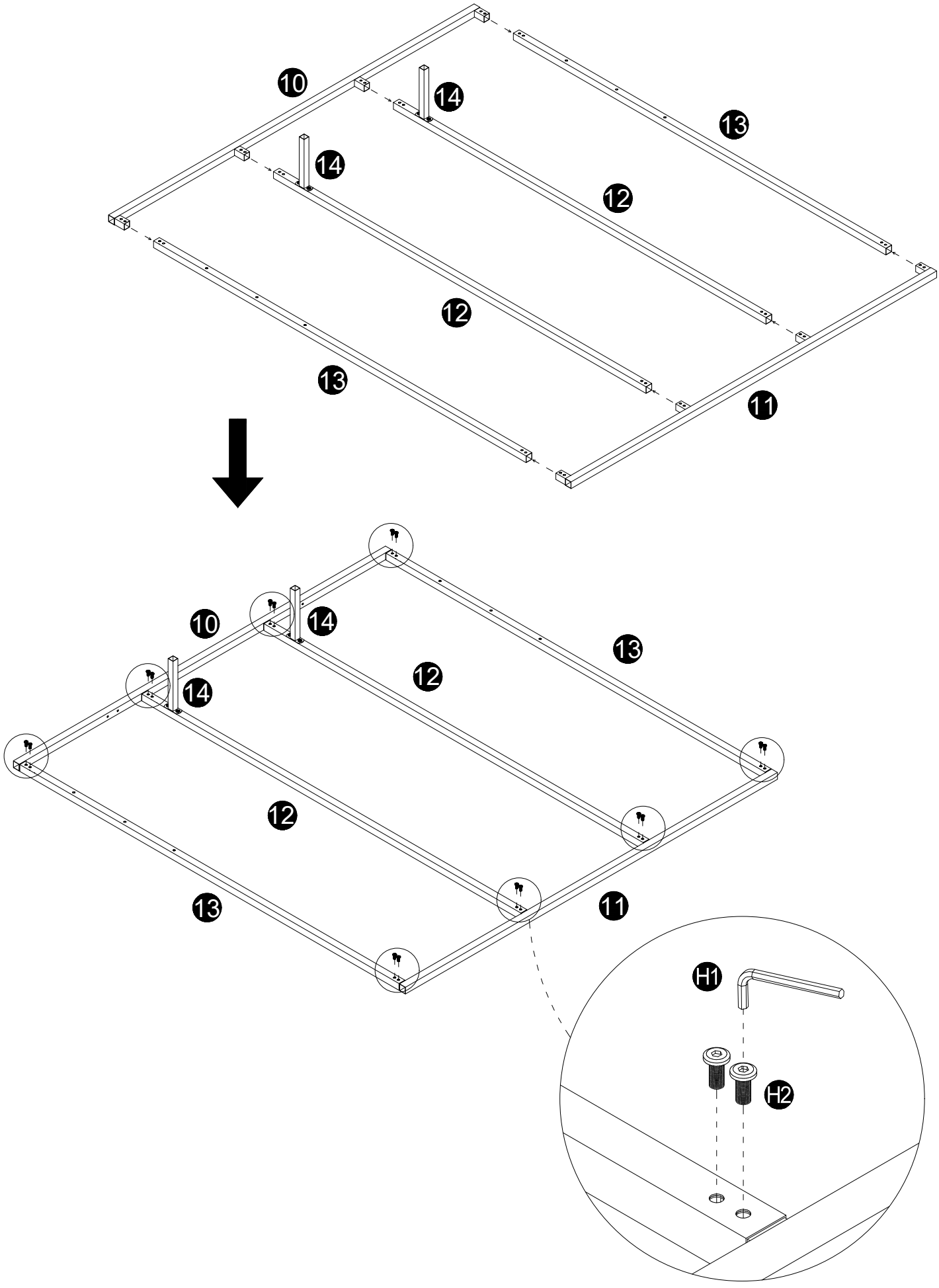

17

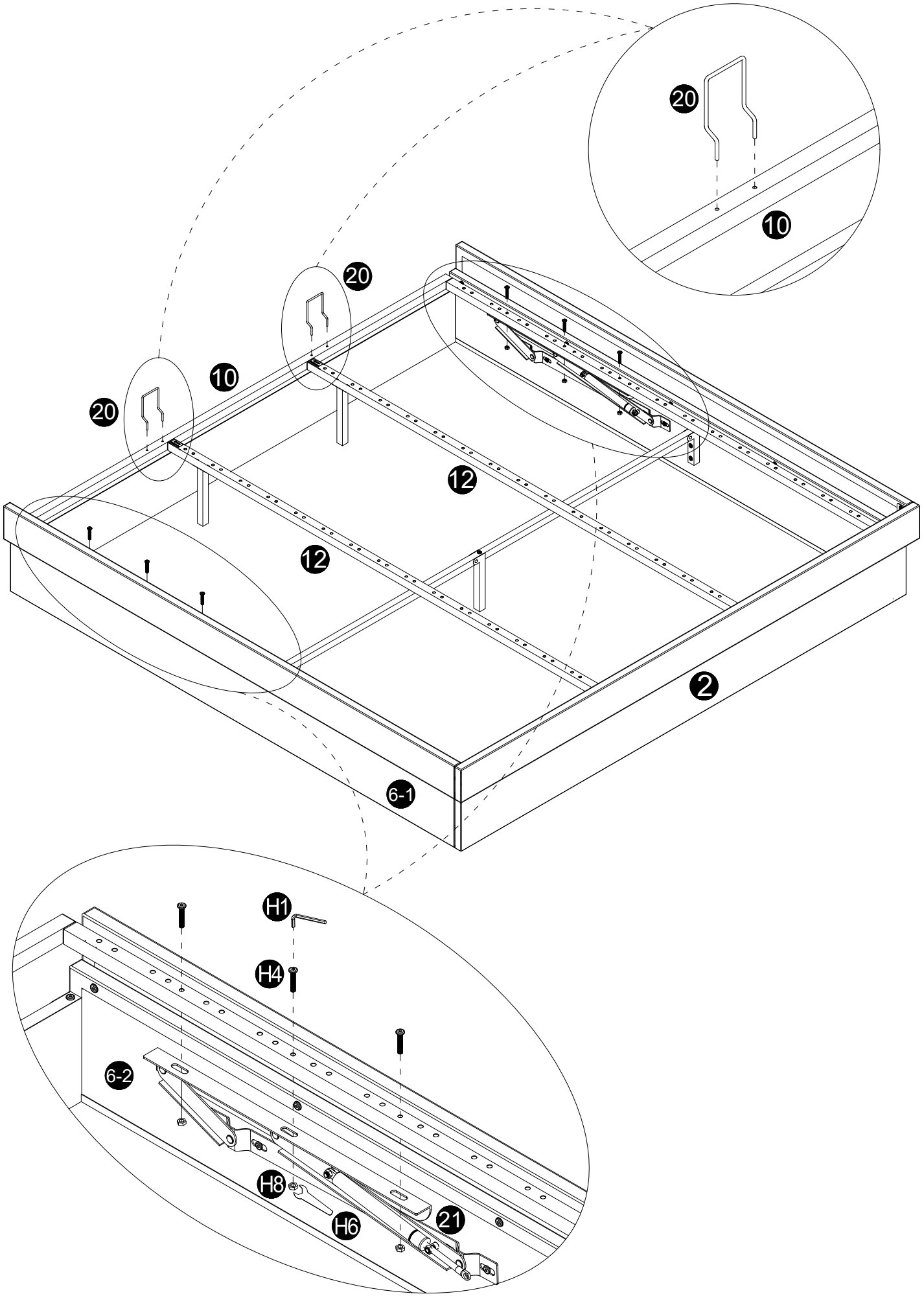

18

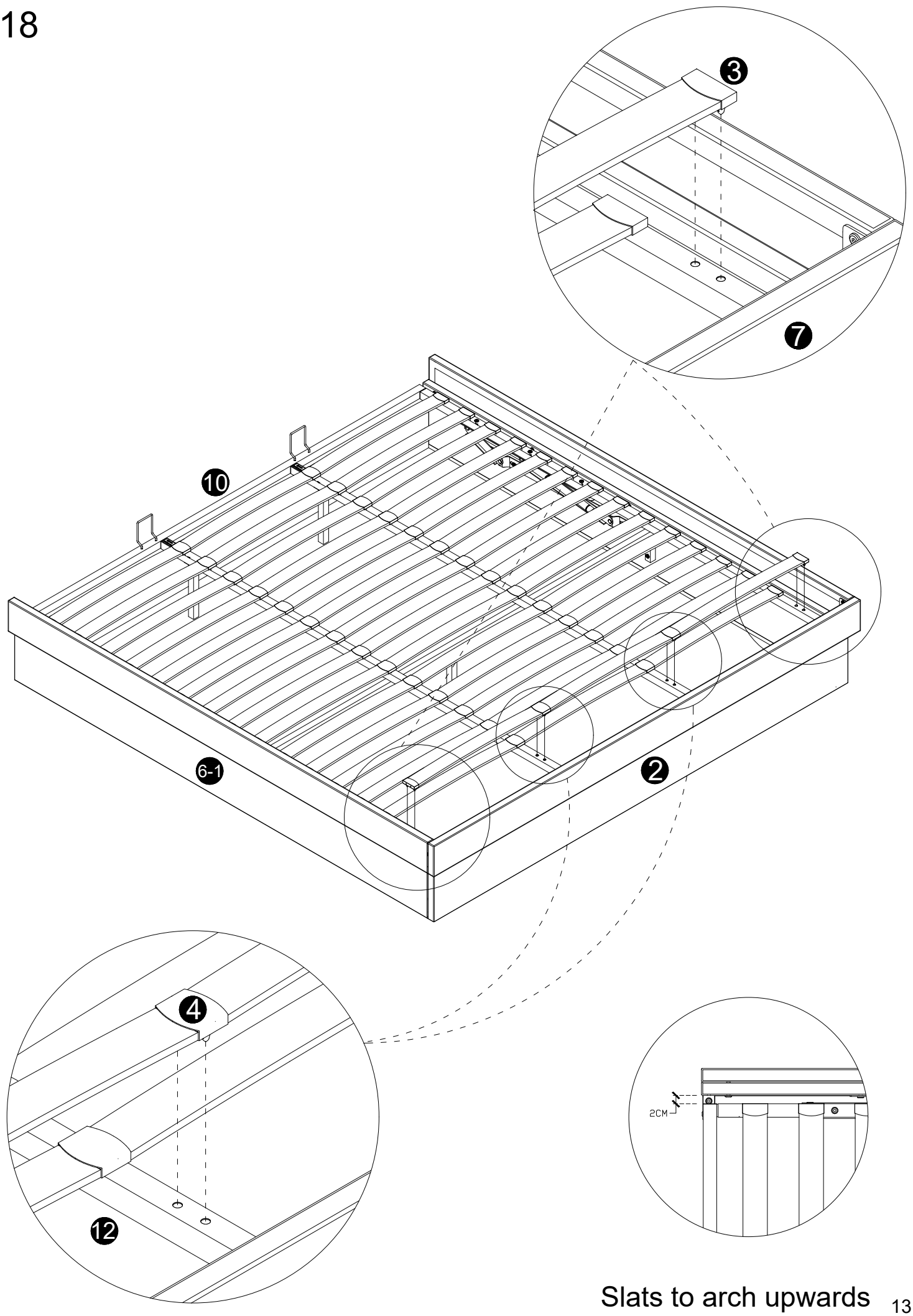


Slats to arch upwards

# 19

Warning: Two people required.
Frame to be fully supported at all times!

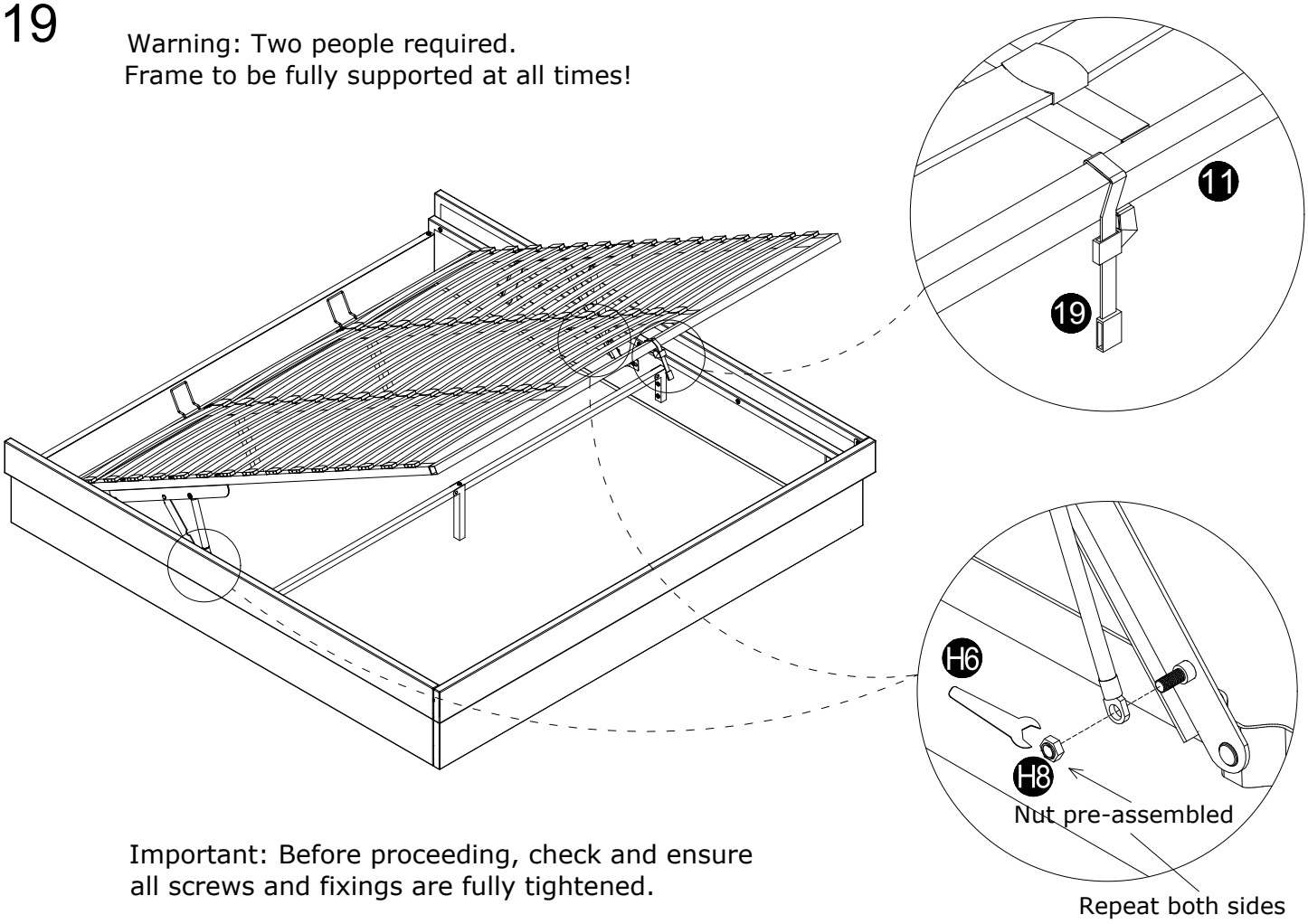


Important: Before proceeding, check and ensure all screws and fixings are fully tightened.

# 20

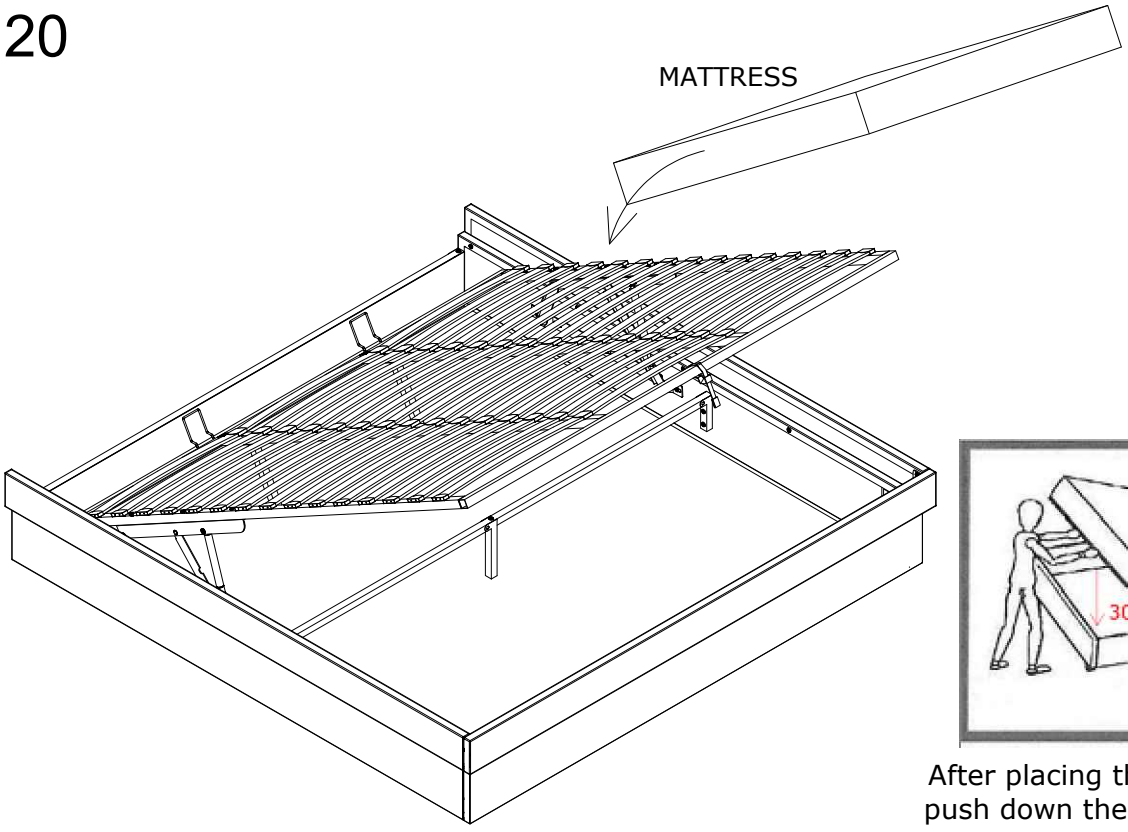


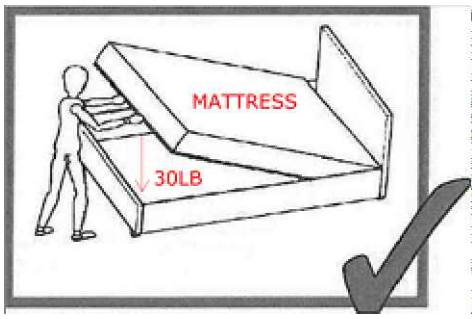


After placing the mattress on frame, push down the frame with 30lbs force.

⚠ Place the mattress on frame & Carefully lower the frame down.
Keep objects/body part & children away from moving parts.

## *Job Complete !*

*In the interest of our environment please dispose of all packaging thoughtfully.*