GREAT NORTHERN POPCORN COMPANY™

POPCORN MAKER

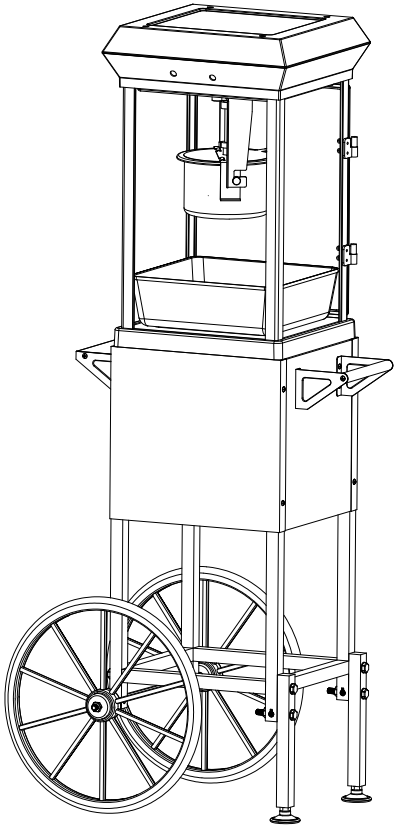

INSTRUCTION MANUAL

ALWAYS READ ALL INSTRUCTIONS BEFORE USING

IMPORTANT SAFEGUARDS

When using any electrical appliance, basic safety precautions should always be followed, including the following:

1. READ ALL INSTRUCTIONS BEFORE USING YOUR POPCORN MACHINE.
2. Keep door closed while operating. Do not touch kettle while operating ?this area gets **HOT.**
3. Do not touch hot surfaces. Always use handles or knobs to operate.
4. To avoid any risk of electrical shock, do not immerse cord or plug into water or other liquid.
5. Close supervision is necessary when it is being used by or near children.
6. Unplug main power cord from outlet while not in use and before cleaning.
7. Allow HOT pa rts to cool down before moving.
8. DO NOT operate the appliance with damaged cord or plug, malfunction or with any mechanical damages. Send the unit to the nearest authorized service center for examination and repairs. (ONLY technicians should open up the unit)
9. It may cause injury by using any accessory or attachment not provided or recommended by manufacturer.
10. Do not pop the kernel with a dry pot (without oil).
11. Do not immerse popping kettle set into water.
12. Kettle surface is HOT and should NOT be touched during popping or immediately after use.

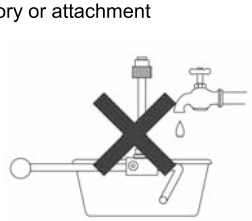



13. Unplug, clean and cover the unit and store into dry and safe place if not being used for long time.
14. Do not leave power cord hanging over edge of table or counter or come in contact with any hot surfaces.
15. Do not place the unit on or near a hot gas or electric burner or in a heated oven.
16. Extreme caution must be paid when moving the appliance containing hot oil or other hot liquids.
17. Always connect the plug to the popping kettle first, and then the main power cord into the wall outlet.
18. Turn ALL switches to "OFF" position before disconnect power plug from the wall supply outlet.
19. Always position appliance close to a power outlet to avoid tripping over power cord.
20. Not recommended for use outdoors.
21. Do not use appliance for other than indicated usage.
22. The popping kettle should NOT be connected with ANY plug and socket system out of this unit.
23. To avoid overheating, always add oil and then kernels before operating.
24. Extreme caution must be paid when emptying popcorn from the kettle. Always place the kettle over a counter-top so the residual oil or condensation will not cause burns.
25. KEEP OUT OF REACH OF CHILDREN.
26. DO NOT CLEAN USING ANY ABRASIVE MATERIAL.
27. NEVER LEAVE UNATTENDED WHILE IN USE.
28. NEVER FORCE ANY PARTS OR BRACKETS INTO POSITION.
29. NO PARTS ARE INTENDED FOR THE DISHWASHER.

SAVE THESE INSTRUCTIONS

FOR HOUSEHOLD USE ONLY

INTRODUCTION:

Thank you for purchasing the old fashioned popcorn maker. This is a great item to have around any fun household or atmosphere. It will add a touch of nostalgic delight to any recreation room with its great turn of the century vendor style design.
Although the popcorn maker may look old fashioned, rest assure that the appliance uses the latest technological advances in kettle popcorn operation. You never have to go without the old fashioned taste of delicious freshly popped popcorn when watching a movie right at home with your family. It is a great way to spend some fun and quality time with the loved ones.
Here are some great recipe tips to use with your popcorn maker.

Regular Theater Style Popcorn - Simply add butter and salt to your liking.
Southwestern Flare - Add a teaspoon of powdered ranch dressing in a packet mixed with some cayenne pepper.
Garlic Gourmet - 1/4 teaspoon of garlic powder and garlic salt and shake it up.
Cheesy Cheddar - 1/2 teaspoon of powdered cheddar cheese.
Muy Caliente - A touch of cayenne pepper, 1/2 teaspoon of powdered cheddar cheese, and 1/2 a cup of jalapeno peppers that have been pat dried.
The Worx - 1/4 teaspoon of garlic powder, powdered cheese, onion powder, cayenne pepper, and salt and pepper.

* Make sure to shake or toss well in order to cover all the popcorn with the seasonings from above.
* All the above are just references and can be adjusted to your own taste.

The popcorn maker is a great excuse to have celebrations or gatherings for no particular reason at all. Simply invite your neighbors or your friends, or gather around with the family.

Here are a few fun ideas for when to use your popcorn maker:

MOVIES:

A night of Cowboys and Indians movies with Southwestern Flare flavored popcorn.
An evening of sappy romantic comedies accompanied with Regular flavor or Cheddar flavor. Avoid the Garlic Gourmet or The Works for any romance.

PARTIES & GET-TOGETHERS:

Birthdays
50s, 60s, 70s or 80s music theme night
Board Games
Sports Night
Poker Night
Karaoke Night

WHERE TO USE YOUR POPCORN MAKER:

Always make sure the popcorn maker is set on a flat and level surface before operating.
Office
Recreation Room
Family Room
Club House

You are now ready to use your popcorn maker. Have fun and enjoy!

Specifications:

Voltage: AC120V~60Hz

Input Power: 480W

Please read this user manual carefully before assembling and using.

Assembly for Tabletop Models:

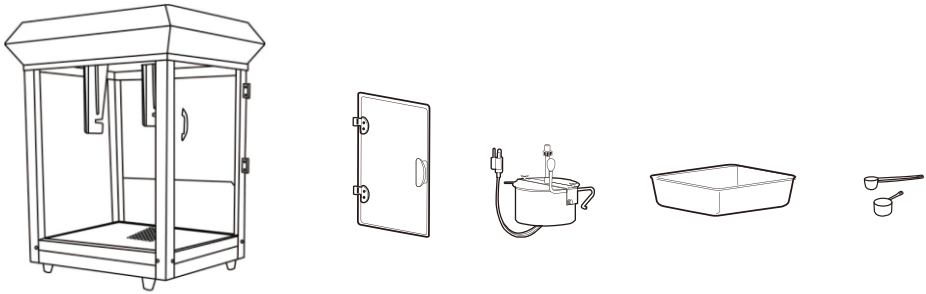

Ⅰ Ⅱ Ⅲ Ⅳ Ⅴ

Ⅰ: Main Unit
Ⅱ: Plastic Door
Ⅲ: Kettle
Ⅳ: Serving Tray
Ⅴ: Kernel Scoop + Oil Scoop set

Assembly for Tabletop Models:

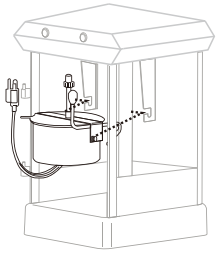

1. Hook the kettle onto the hangar of the main housing.

2. Insert the inside kettle plug into its socket located on the inside top of the housing.

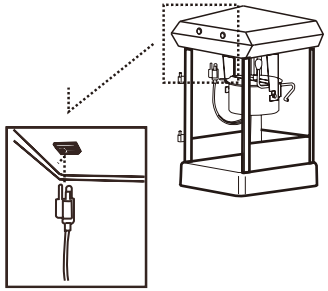

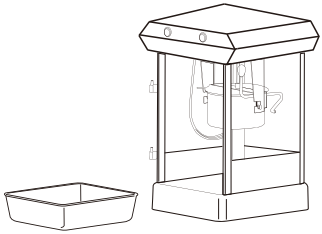

3. Place the removable tray into the housing.

4. Hang the door onto the hinges.

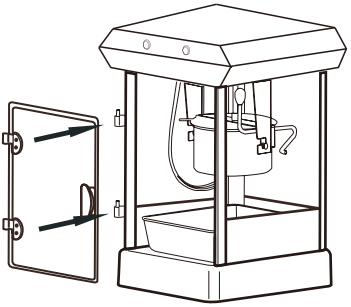

Parts List for Cart Models:

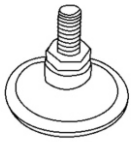		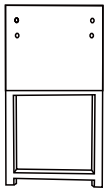	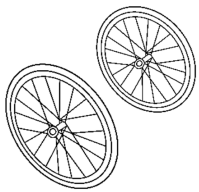
Rubber Feet (A) - 2pc	Support Legs (B) - 2pc	Support Stand (C) - 2pc	Wheels (D) - 2pc
	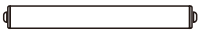	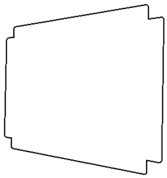	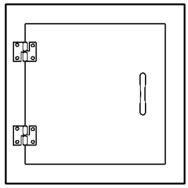
Horizonal Supports Base (E) - 2pc	Horizonal Supports with Screws (F) - 2pc	Cabinet Base (G) - 1pc	Cabinet Front with Door (H) - 1pc

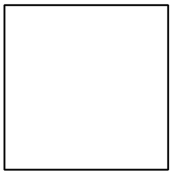	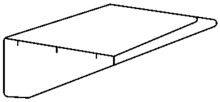	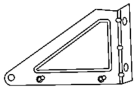
Cabinet Back (I) - 1pc	Working Platform (J) - 1pc	Working Platform Brackets (Large) (K) - 2pc
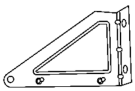	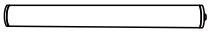	
Handrail Brackets (Small) (M) - 2pc (Options)	Handrail (N) - 1pc	

Hardware for Cart Models:

Screwdriver (1 pc) and Wrench (2 pcs) are also included.

			
Wheel Bolt M8x75(O) x 2 pcs	Nylon Nut M8 (P) x 2 pcs	Nut M8(Q) x 4pcs	Washer M8（R）x 10 pcs
			
Bolt M8x65 (S) x 4 pcs	Bolt M8x40 (T) x 2 pcs	Screw M4x8(V) x 8pcs	Long Spacer(W) x 2 pcs
			
Bolt M6x16 (X) x 8 pcs	Nut M6(Y) x 8pcs	Washer M6（Z）x 8pcs	

EXPLODED VIEW OF THE CART

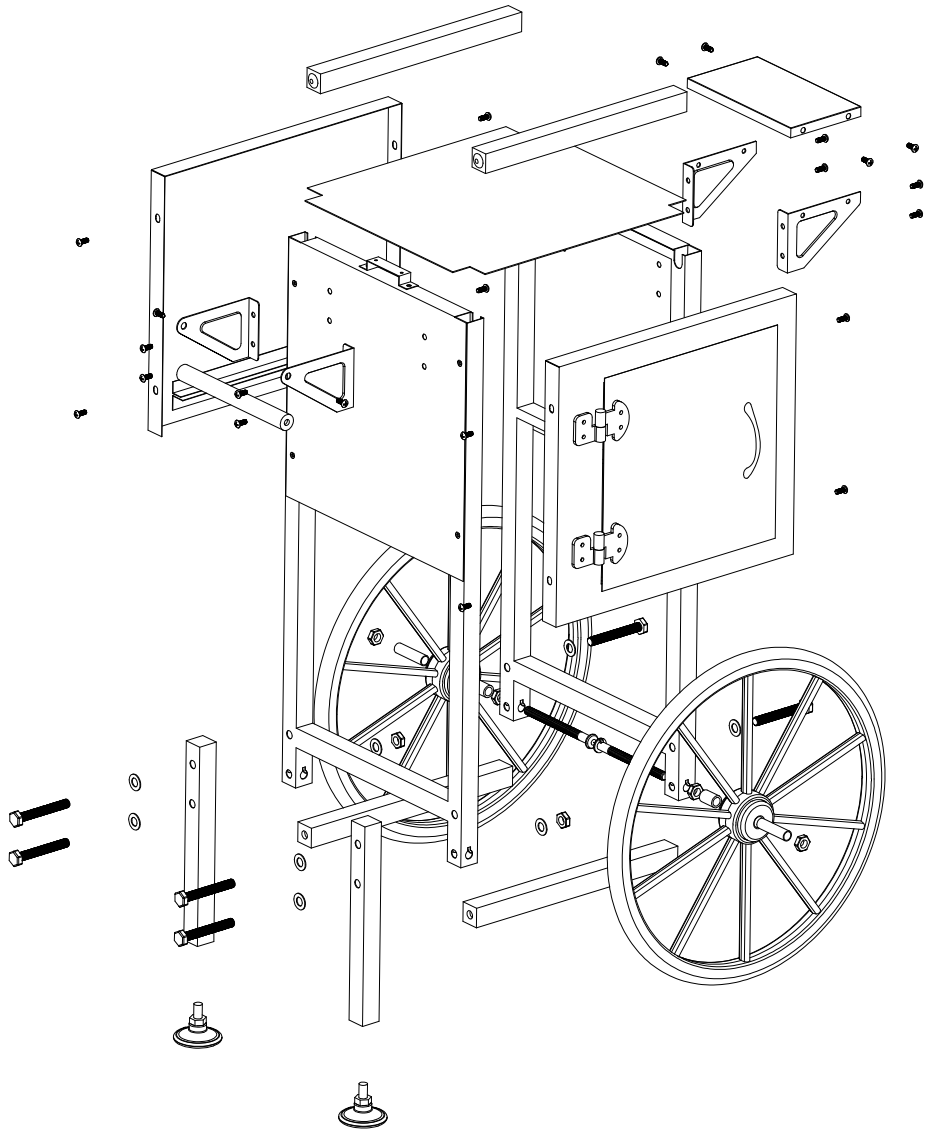

Assembly for Cart Models:

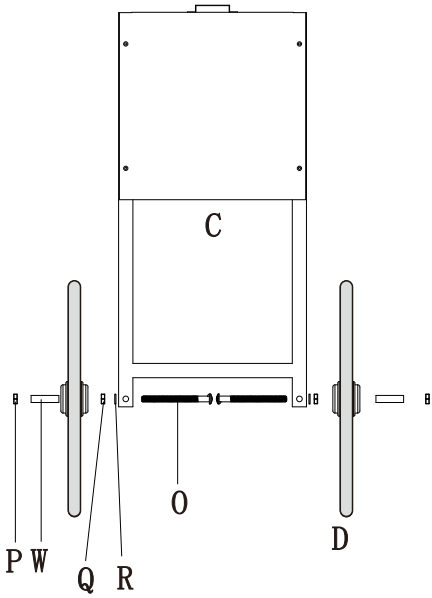

◄ STEP1

Insert one **WHEEL BOLT**(O)into the bottom holes located on each side of the **SUPPORT STAND**.（C）
NOTE: Insert the bolt from the inside out, then secure the wheel bolts with one **NUT**(Q) and **WASHER**(R) on each side and tighten them with the wrench.

Hang **SPACER**(W) and one **WHEEL** (D) onto one **WHEEL BOLT**(O) and secure it with one **NYLON NUT**(P). Tighten them with the wrench. Then , repeat this step for the other wheel.
NOTE: Do not over tighten. Make sure both wheels can spin freely.

STEP2 ►

Screw one of the **RUBBER FEET**(A) into the bottom of each **SUPPORT LEG**(B). Tighten both rubber feet.

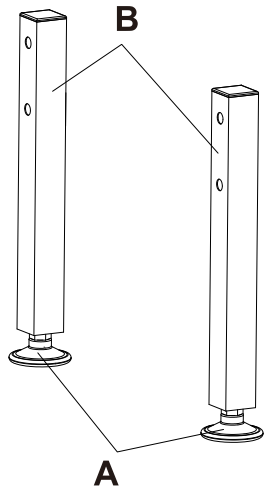

Assembly for Cart Models:

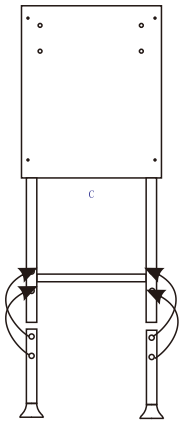

◀ STEP3

Put the assembled **SUPPORT LEG**(B) together with the **SUPPORT STAND**（C）. The holes should be aligned.

STEP4 ▶

Insert the **BOLTS**(S) into the holes of stand, secure them with **NUT**(Q).

Attach both **HORIZONTAL SUPPORTS-BASE**(E) to the assembled stand. The other side connect with other support stand. Secure them with two **BOLTS**(T) and one **WASHER** （R）each.

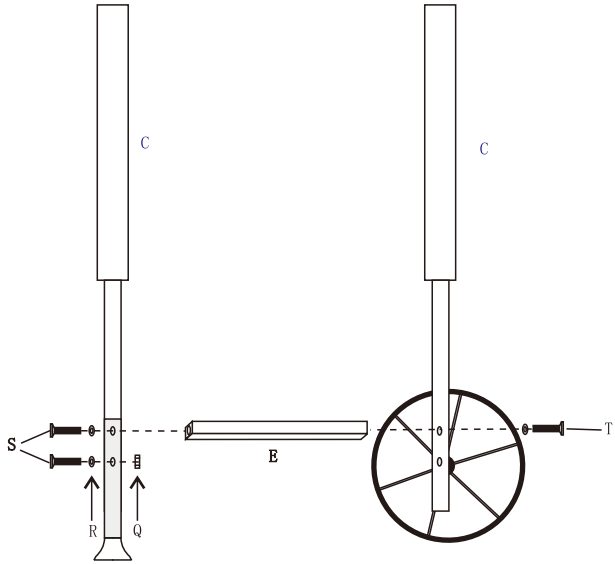

Assembly for Cart Models:

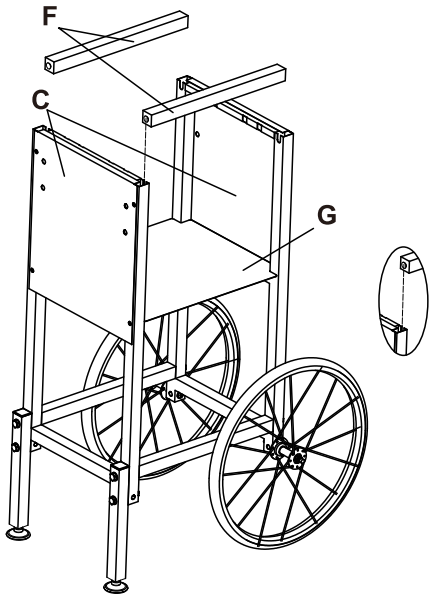

◀ STEP5

Insert boh **HORIZONTAL SUPPORTS –WITH SCREWS**（F）in the grooves at the ends of each **SUPPORT STAND**(C), as shown

Insert the **CABINET BASE**(G).
NOTE: Place the lipped side facing down and line the cabinet base up between the **SUPPORT STANDS**（C）.

STEP6 ▶

NOTE: Before assembling the front and back panels, determine which side you want the cabinet door facing outward.
Insert the **CABINET BACK**(I). Secure the panel to the support stands with **SCREWS**(V) as shown in the figure.
Tighten the screws with the screwdriver.

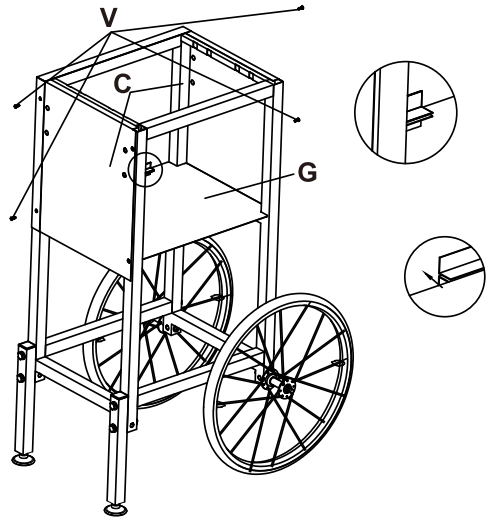

Assembly for Cart Models:

STEP7 ▶

Insert the **CABINET FRONT**(H). Secure the panel to the support stands with **SCREWS**(V) as shown in the figure.
Tighten the screws with the screwdriver.

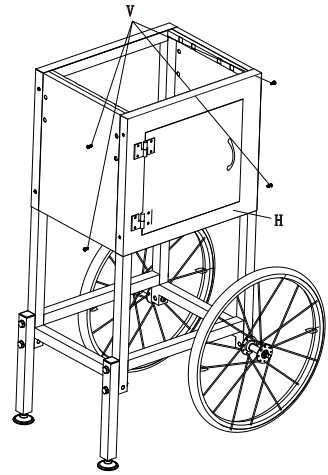

STEP8 ▶

Attach one of the **WORKING PLATFORM BRACKETS** (K)to one end of the handle.
Insert the **WORKING PLATFORM**(J) to the same bracket using the pre-assembled screws.Repeat the steps above to attach the remaining bracket on the other side.

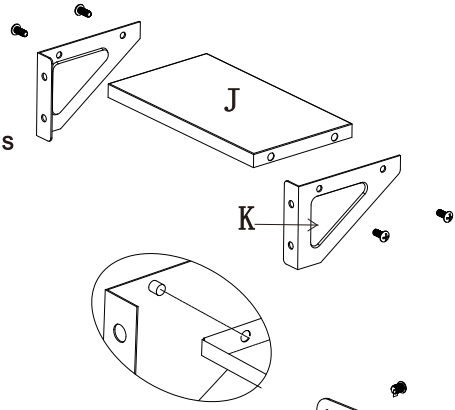

STEP 9 ▶

Remove the pre-assembled screws from the **HANDRAIL** (N).
Attach one of the **HANDRAIL BRACKETS** (M)to one end of the handle. Insert screw and tighten them.
Repeat the steps above to attach the remaining bracket on the other side.
.

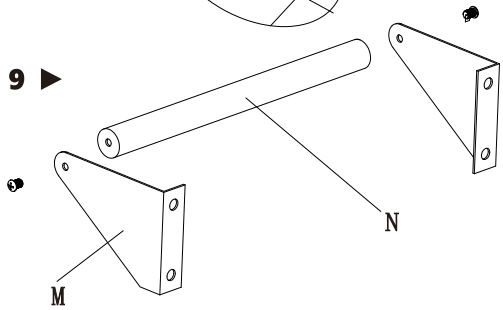

Assembly for Cart Models:

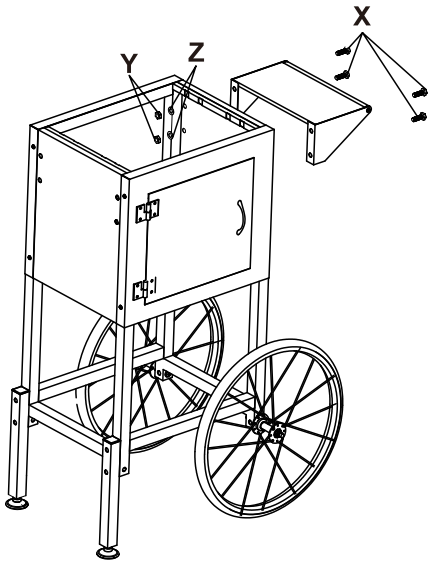

◄ STEP10

Using four **BOLTS (X)**, **WASHERS (Z)** and **NUTS (Y)**, install the assembled **WORKING PLATFORM** on the right side of the cart (same side as wheels).

STEP11 ►

Using four **BOLTS (X)**, **WASHERS (Z)** and **NUTS (Y)**, Install the assembled **HANDRAIL** on the left side of the cart (opposite the wheels).

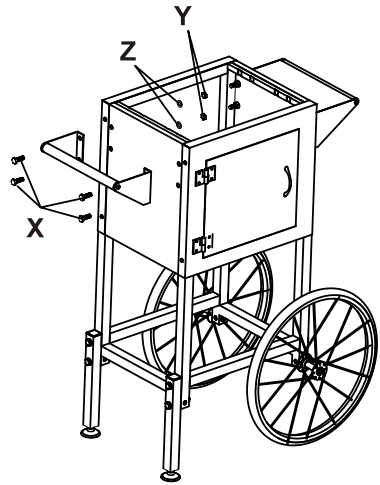

ROTATION TYPE KETTLE LID ASSEMBLY

Refer to the picture below, install the kettle lid onto the kettle. (The handle of the kettle lid should be face to the handle of the kettle.) And than tighten the two screws on the kettle lid.

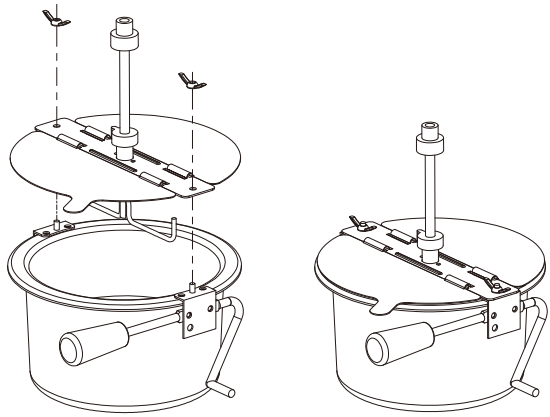

USING YOUR POPCORN MAKER

1) Make sure the popcorn maker is unplugged before you do any of the following.
2) Before using the unit, please check carefully if voltage is suitable to the country. (Please check if the voltage matches with rating label specified next to the power cord).
3) Clean the internal surface of the kettle pot and main unit surfaces.
4) Main unit has 2 function switches as follows:

Light	Spot light	(I)
POP	Stirrer and Pot heater	(II)

5) Hook up the kettle onto the hanger of the main unit.
6) Make sure internal plug is connecting socket and then plug in the power supply cord to the popcorn maker.

7) Switch on the Spot light (I), and then fill in suitable amount of butter or oil (Fig. 1-next page). Consumer could fill amount of oil subject to your own choice.
8) Popping pot should be pre-heat for 3 to 4 minutes with oil (until steam comes out from the pot). Please prepare kernels.
9) Take the lid onto the magnet and then pour in kernels (Fig. 2)
Caution: Lid might be hot and recommend contacting with oven mitten.
10) Switch ON the pot heater (II) so that it starts stirring. (Fig. 3)
11) Close the door carefully.
12) Popcorn starts popping out through the lid after about 2 to 3 minutes. (Fig. 4)
13) Switch OFF the Heater (II) when popping completed (No more popping sound from pot). Rotate the roller bar of the pot and pour out all remaining popcorn from pot.
14) Keep Pot heater switch (II) OFF if the unit is not continuously using. Remain only the spot light ON, thus could keep the popcorn warm, dry and tasty.
15) Serve your popcorn with popcorn scoop provided.
16) Remove plug from power supply if the unit is not being used for long time.
17) Repeat step 7 to 10 for continuous popping.

OIL	POPCORN
1 Tbsp	1/2 Cup
1.5 Tbsp	3/4 Cup

Fig. 1



Fig. 2



Fig. 3



Fig. 4



Cleaning and Maintenance

"Any other servicing should be performed by an authorized service representative."
To avoid burning of excess amount of sugar stays onto bottom of the inner pot, it is strongly recommended to clean the popping pot after using 3 to 4 times.

After using the popcorn machine, users should use wet towel to clean up the main unit, main body and glasses; rubbish tray is strongly recommended to tidy up frequently so that there is no bacteria.

Quick Cleaning Procedure:

Switch OFF (II). Pour 150 to 250 ml of water (NO detergent is necessary) into inner pot. Switch ON the stirrer and heater (II) again to boil the water and let the stirrer to turn in order to remove excess amount of sugar stuck on the surface. Pour out the water after about 1 to 2 minutes of boiling. **Caution: Hot kettle!**
Repeat the same procedure 2 to 3 times to get better result.

Standard cleaning procedure:

1. Repeat the above "Quick cleaning procedure" until it's relatively cleans.
2. Switch off the machine and wait for the popping pot becomes cold. Clean the inside and outside of the pot by brush and wet towel. (NEVER immerse the pot into water.)