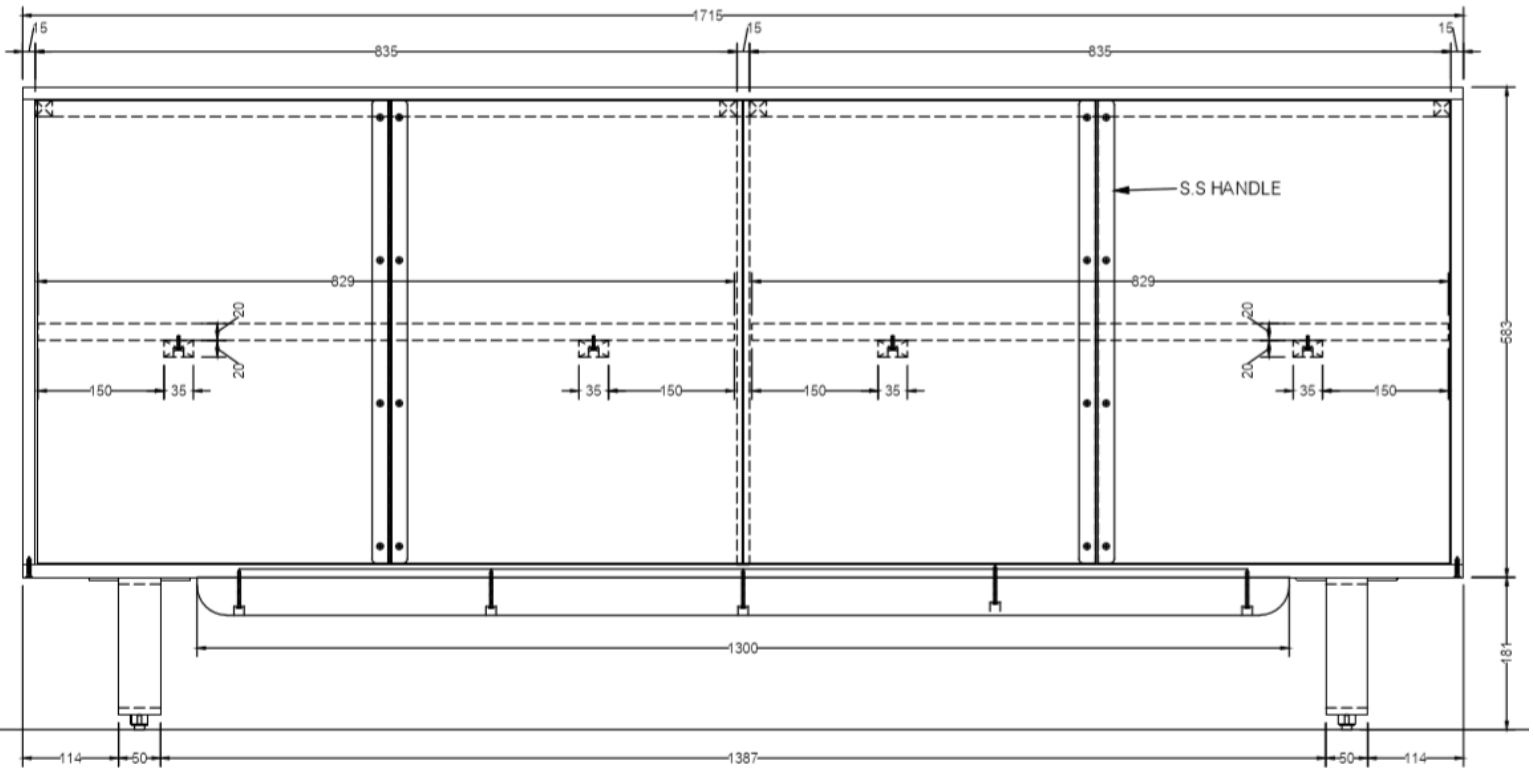
1715
15
835
S.S HANDLE
829
20
150
35
583
181
1300
114
50
1387

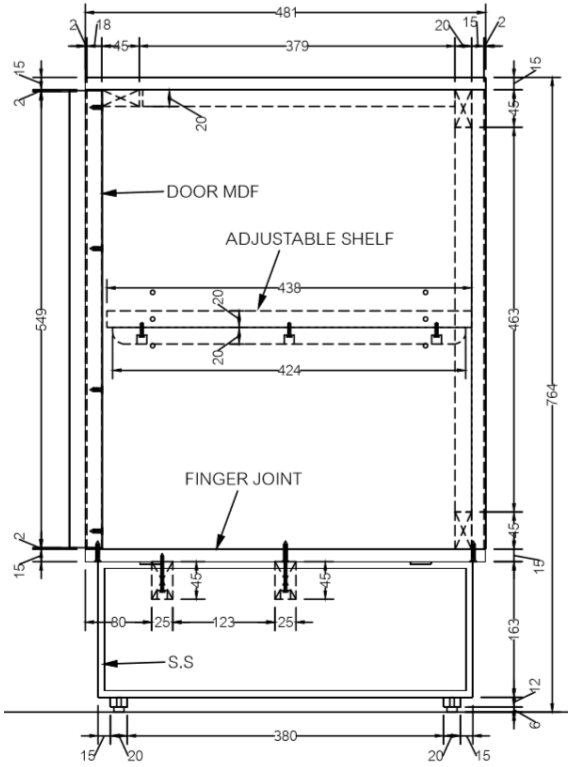
481
2
18
45
379
20
15
DOOR MDF
ADJUSTABLE SHELF
438
424
549
463
764
FINGER JOINT
80
25
123
S.S
163
12
380

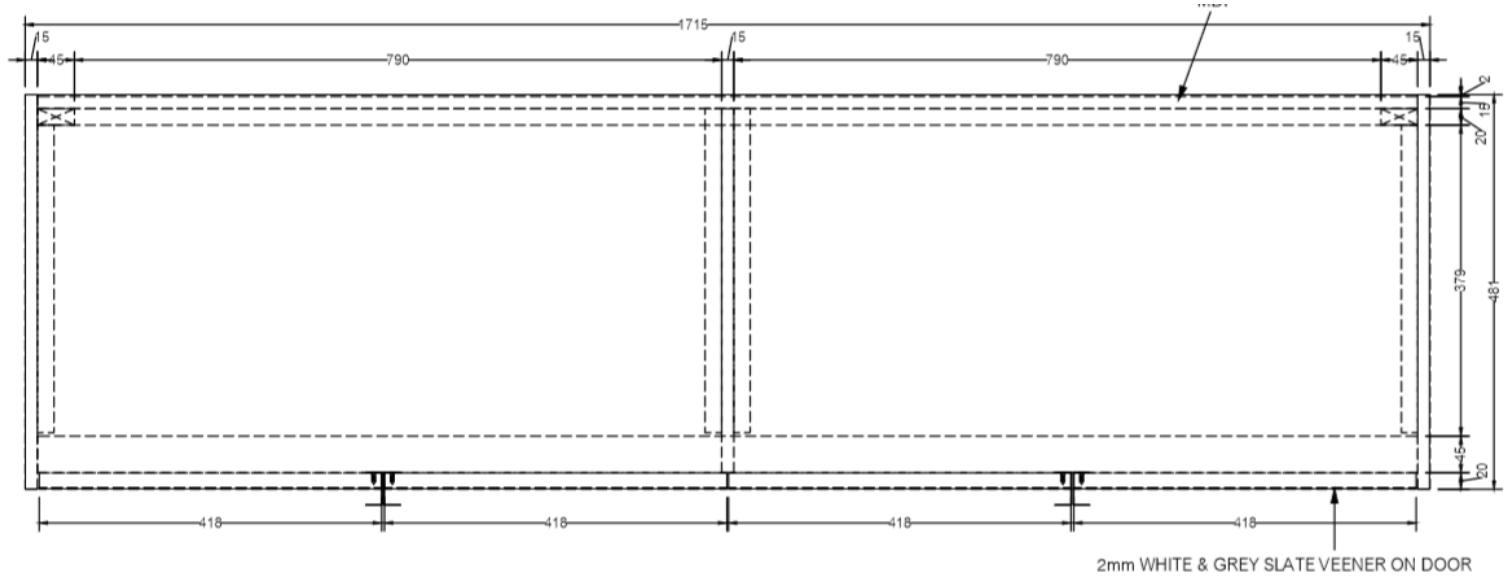
1715
15
45
790
2
20
379
481
418
2mm WHITE & GREY SLATE VEENER ON DOOR