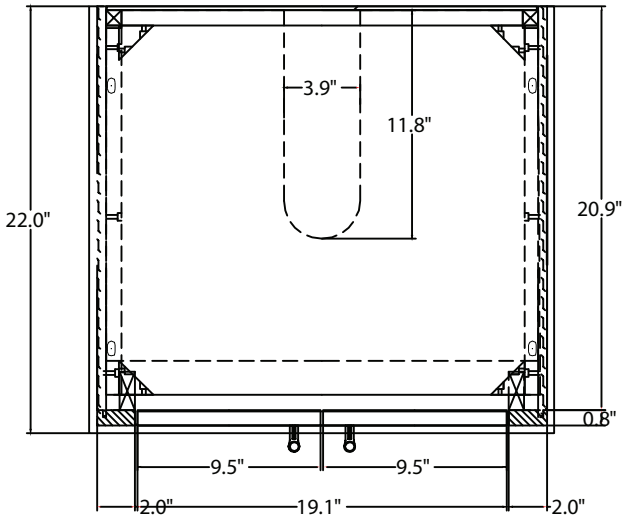
3.9"
11.8"
22.0"
20.9"
0.8"
9.5"
9.5"
2.0"
19.1"
2.0"

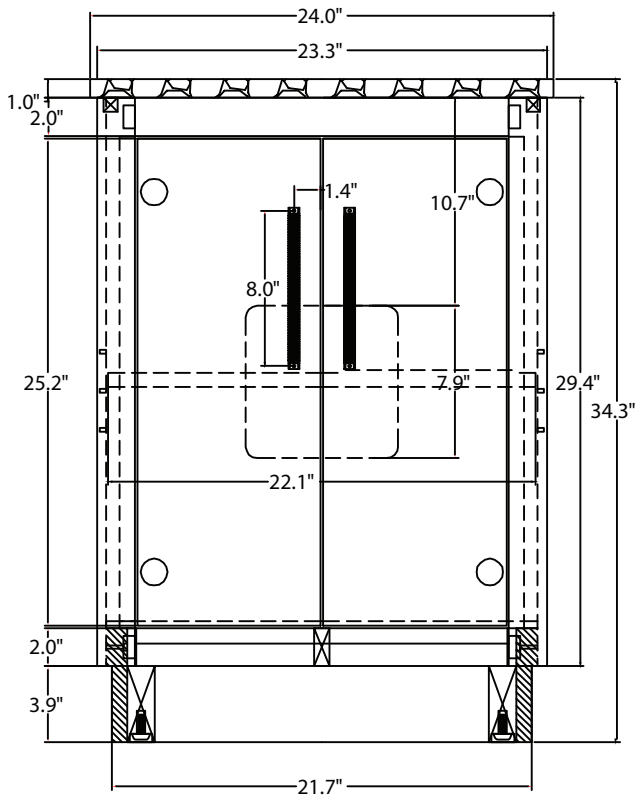
24.0"
23.3"
1.0"
2.0"
1.4"
10.7"
8.0"
25.2"
7.9"
29.4"
34.3"
22.1"
2.0"
3.9"
21.7"

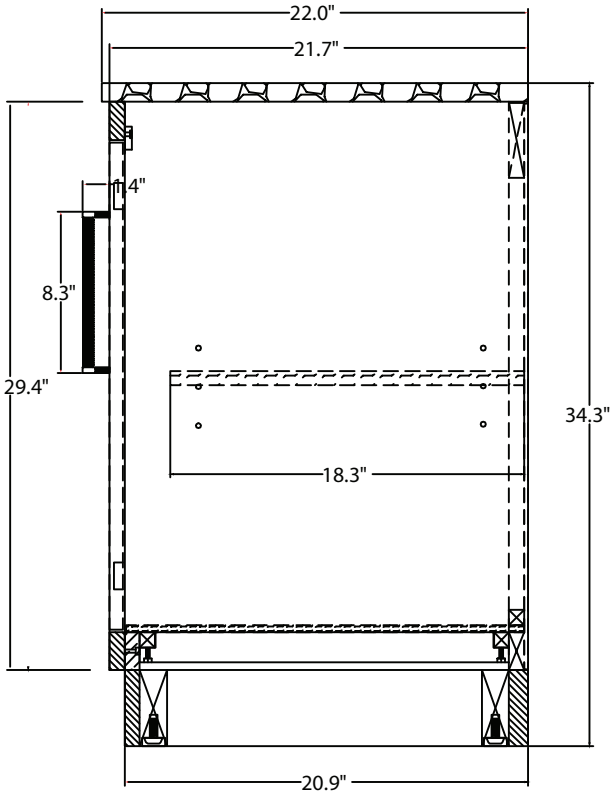
22.0"
21.7"
1.4"
8.3"
29.4"
34.3"
18.3"
20.9"

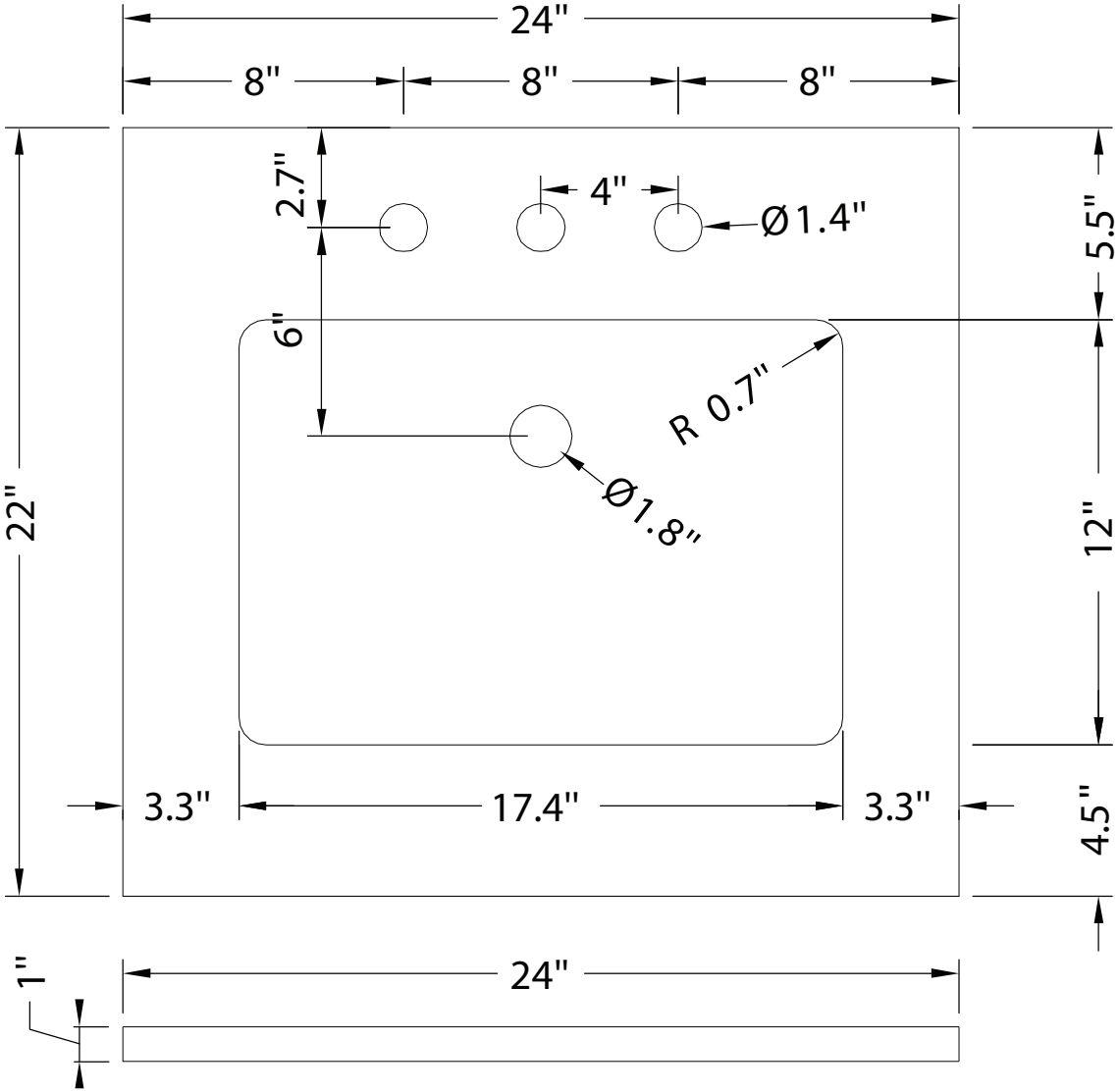
24"
8"
8"
8"
2.7"
4"
Ø1.4"
5.5"
6"
R 0.7"
22"
Ø1.8"
12"
3.3"
17.4"
3.3"
4.5"
1"
24"

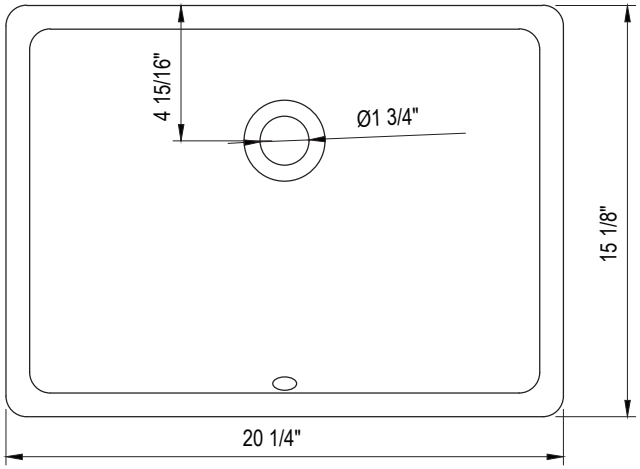
4 15/16"
Ø1 3/4"
15 1/8"
20 1/4"

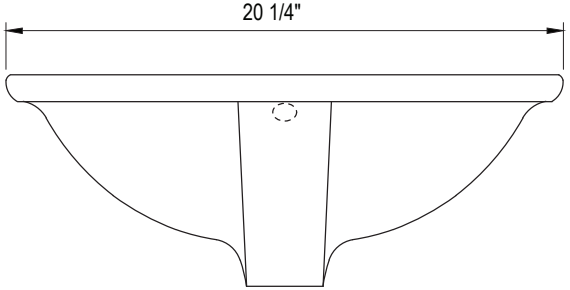
20 1/4"

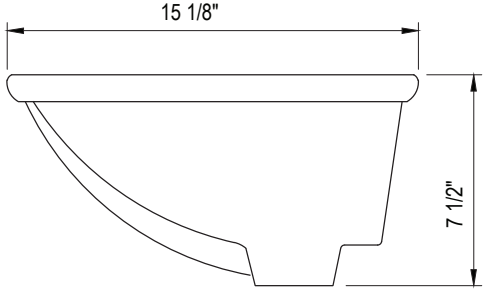
15 1/8"
7 1/2"

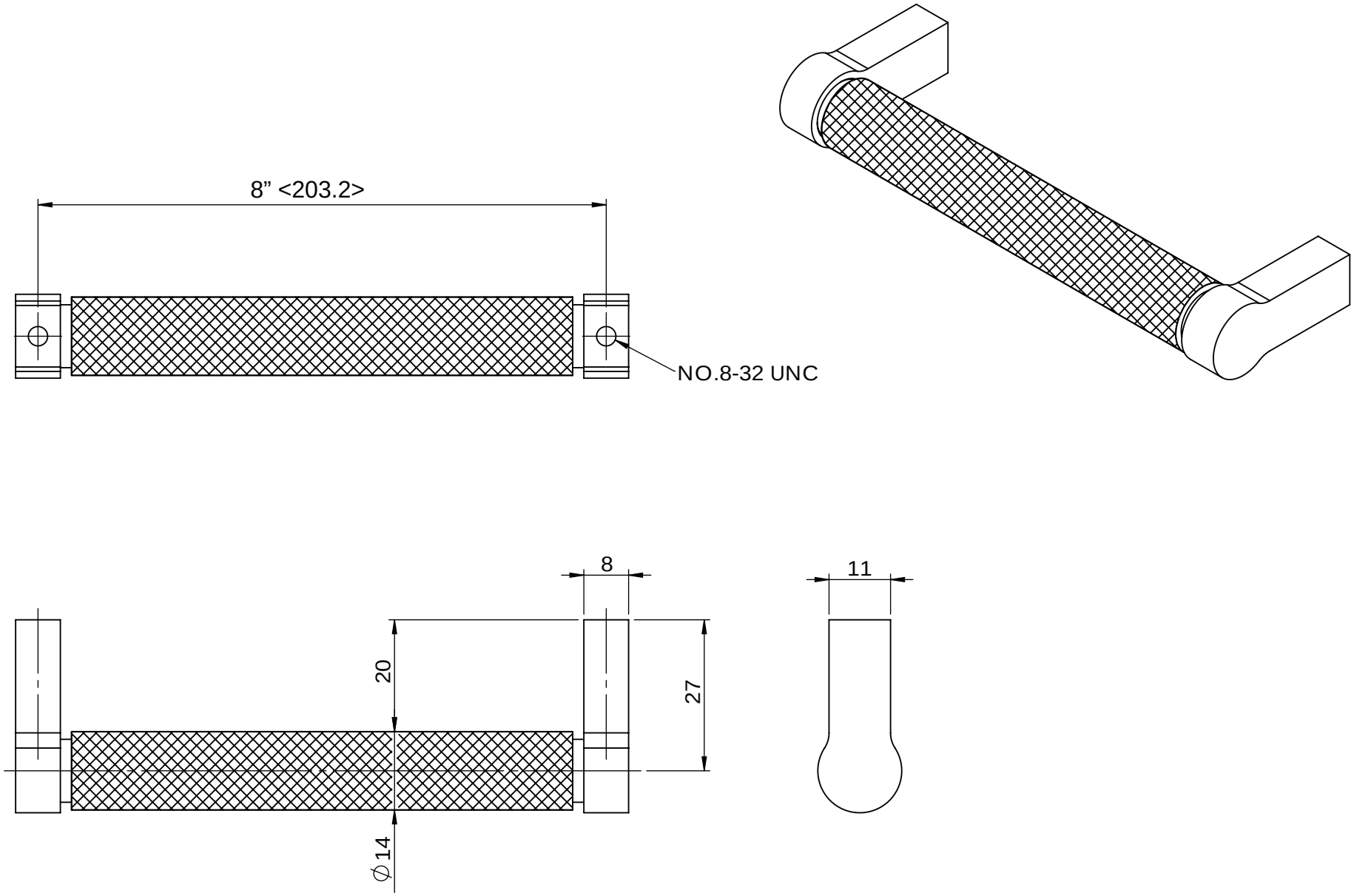
8” <203.2>
NO.8-32 UNC
8
11
20
27
Ø14

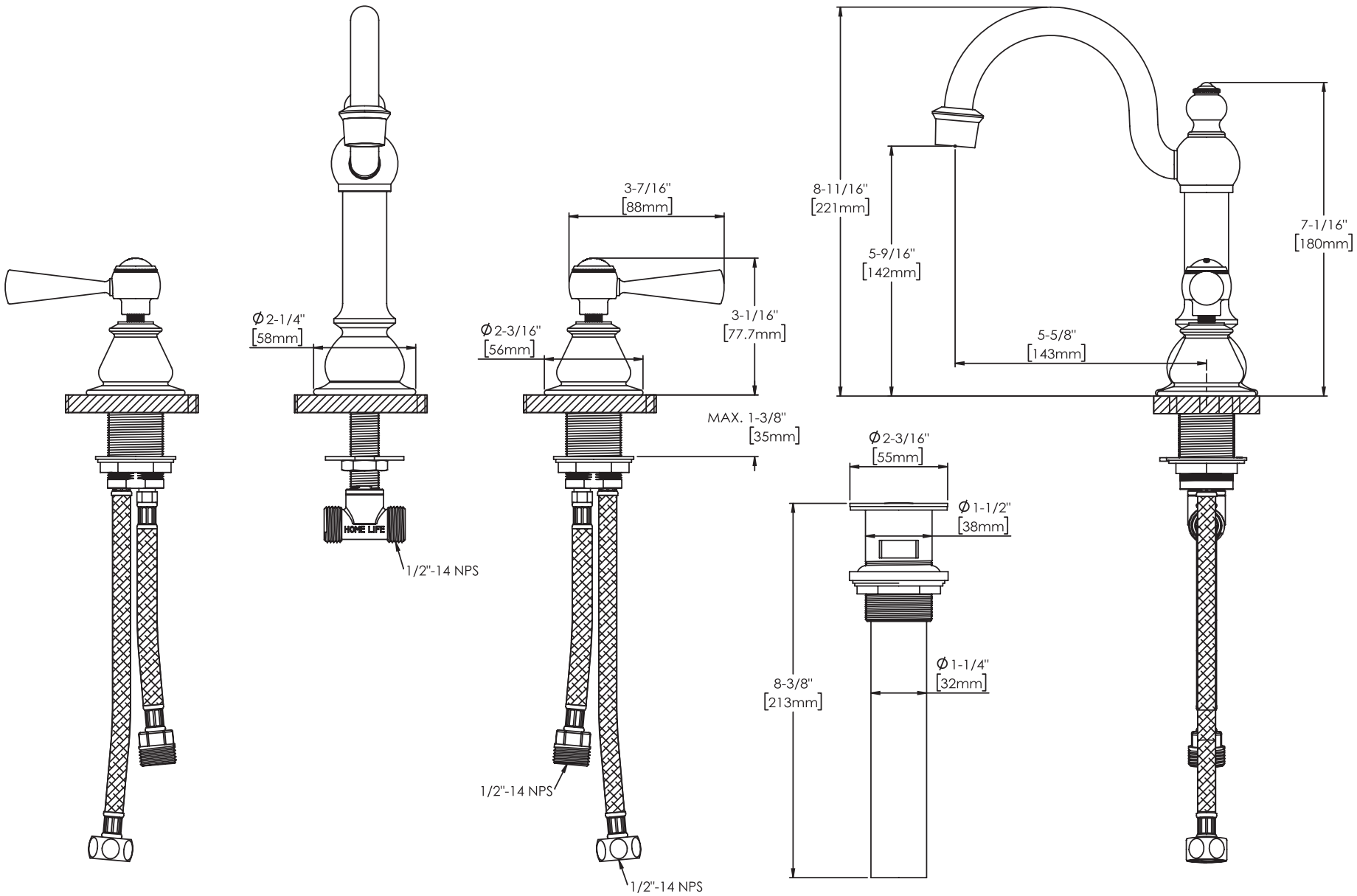
Ø2-1/4"
[58mm]
HOME LIFE
1/2"-14 NPS
3-7/16"
[88mm]
Ø2-3/16"
[56mm]
3-1/16"
[77.7mm]
MAX. 1-3/8"
[35mm]
1/2"-14 NPS
1/2"-14 NPS
8-11/16"
[221mm]
5-9/16"
[142mm]
5-5/8"
[143mm]
7-1/16"
[180mm]
Ø2-3/16"
[55mm]
Ø1-1/2"
[38mm]
Ø1-1/4"
[32mm]
8-3/8"
[213mm]

2024-12-19