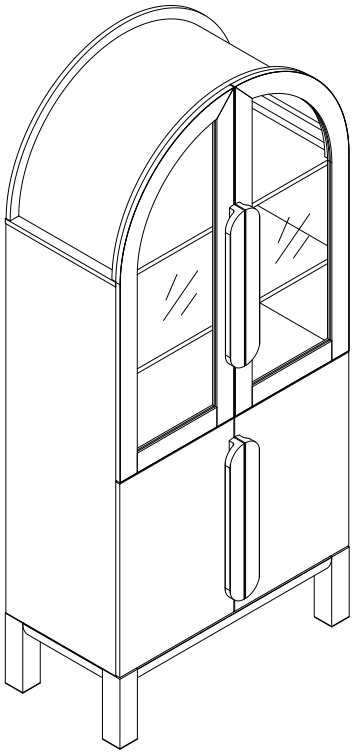

ASSEMBLY INSTRUCTIONS

IMPORTANT : please read this manual carefully before beginning assembly of this product.keep this manual for future reference.

1

★ **Thank you for choosing our products please read the instructions carefully before installation,and please keep the instructions properly**

Tips and tricks

1.Do not attempt to move this furniture without first removing all equipment
2.Death or serious injury may occur when children climb on audio and/or video equipment furniture. A remote control or toys placed on the furnishing may encourage a child to climb on the furnishing and as a result the furnishing may tip over onto the child.
3.Please contact us using the details shown for further advice

⚠ **WARNING** If any parts are missing or damaged, do not return the damaged item to your dealer; contact Customer Service. Never use damaged parts!

2

★ **¡Gracias por elegir nuestros productos, por favor lea las instrucciones cuidadosamente antes de la instalación, y guárdelas correctamente!**

Consejos y truco

1.Si no quita todos los equipos en el primer lugar, no intente mover este mueble
2. Cuando los niños suben a los muebles con el equipo de audio y / o video, la muerte o las lesiones graves podrían ocurrir.El control remoto o los juguetes colocados en el mueble pueden estimar a un niño a subir en el él y el mueble podría volcarse sobre el niño.
3.Póngase en contacto con nosotros utilizando los detalles mostrados para obtener más sugerencias.

⚠ **ADVERTENCIA** Si las piezas faltan o están dañadas, no devuelva el producto dañado a su distribuidor; póngase en contacto con los Servicios al Cliente. ¡Nunca utilice las piezas dañadas!

3

★ **Vielen Dank für Ihre Auswahl für unsere Produkte, lesen Sie bitte die Anweisungen sorgfältig vor Ihrer Installation und halten Sie bitte die Anweisungen richtig!**

Tipps und tricks

1.Versuchen Sie bitte nicht, diese Möbel zu bewegen, ohne zuerst alle Geräte zu entfernen
2.Wenn die Kinder auf Audio und / oder Videogerätemöbel klettern, kann Tod oder schwere Verletzungen kommen. Eine Fernbedienung oder Spielzeug kann die Kinder ermutigen, die auf die Einrichtung gestellt wird, sich auf die Einrichtung zu klettern. Dies bewirkt, dass die Möbel auf Ihre Kinder umfallen könnte.
3.Bitte kontaktieren Sie uns mit den Details für weitere Beratung

⚠ **WARNING** Wenn irgendwelche Teile fehlen oder beschädigt sind, geben Sie bitte den beschädigten Artikel nicht an Ihren Händler zurück; Kontaktieren Sie bitte mit dem Kundendienst. Verwenden Sie bitte niemals beschädigte Teile!

4

★ **弊社の製品を選んでくれてありがとうございます。インストールする前に説明書をご覧にいただき、それに当説明書を適切に保存してください。**

提示と技巧

1.設備を全て開かない場合、当設備を移動することはできません。
2.子どもがステレオまたはビデオの設備の上に登ると、体を壊したり、ひどく傷ついたりする恐れがある。設備のリモコンと玩具によって、子ども が設備の上に登りたがっているかも知れないので、設備は子どもの身にに倒れる危険がある。
3.設備の使用に関わる詳細な情報を弊社にご連絡してください。

⚠ **警告** どんな部品が紛失したり壊れたりする場合でも、そのままディーラーのところへ返送しないでくだい、顧客サービスセンターに連絡してください。壊れた部品を使用しないてください。

5

★ **Nous vous remercions d'avoir sélectionné nos produits, lisez les instructions attentivement avant l'installation, et gardez les instructions correctement s'il vous plaît!**

Conseils et astuces

1.Ne tentez pas de déplacer ce mobilier sans enlever tout l'équipement.
2. Des dégâts ou des blessures graves pourraient survenir lorsque les enfants grimpent sur des meubles audio et / ou vidéo. Une télécommande ou des jouets places sur le meuble pourraient encourager un enfant à grimper sur le meuble, il en résulte que le meuble pourrait basculer sur l'enfant.
3.Contactez-nous en utilisant les détails affichés pour obtenir les conseils s'il vous plaît

▲ **AVERTISSEMENT** S'ily a des pièces manquantes ou endommagées, ne renvoyez pas l'article endommagé à votre vendeur; Contactez le service clientèle. Ne jamais utiliser de pièces endommagées!

6

★ **Grazie per aver scelto i nostri prodotti, si prega di leggere attentamente le istruzioni prima dell'installazione e rispettare le istruzioni corrette!**

Suggerimenti e trucchi

1.Non tentare di spostare questo mobile senza prima rimuovere tutte le apparecchiature
2. Possono verificarsi morti o gravi lesioni quando i bambini salgono su mobili per arredamento audio e/o video. Un telecomando o i giocattoli messi sull'arredamento possono incoraggiare un bambino ad arrampicarsi sull'arredamento, e di conseguenza l'arredamento può piegarsi sul bambino.
3.Vi preghiamo di contattarci utilizzando i dettagli mostrati per ulteriori consigli

⚠ **AVVERTENZA:** Sse mancano o sono danneggiate parti, non restituire l'elemento danneggiato al rivenditore; Contattare il Servizio Clienti. Non utilizzare mai parti danneggiate!

WHAT'S IN THE BOX

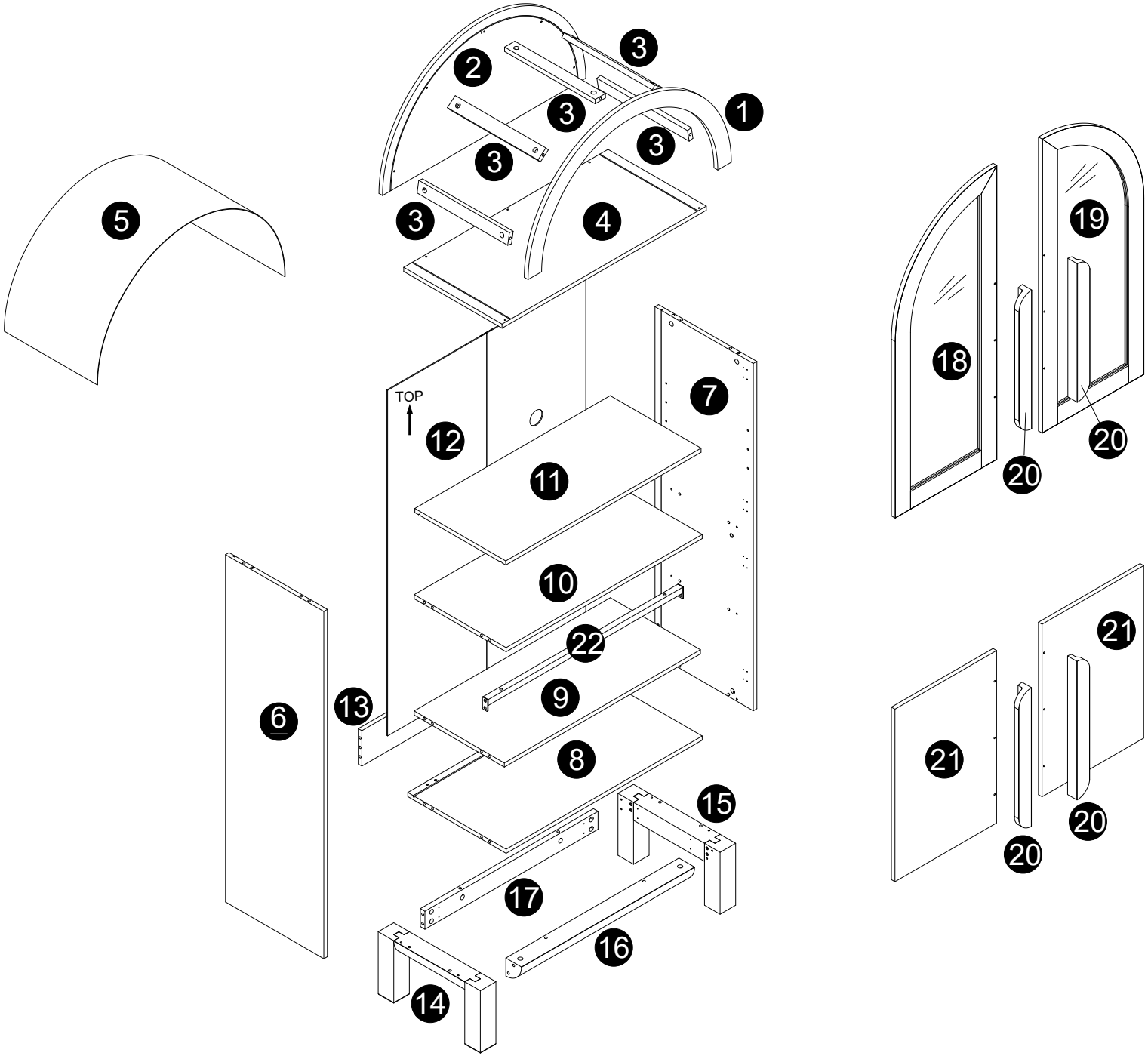

WHAT'S IN THE BOX

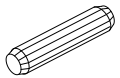

Wooden dowel
Ø8x30mm
A x 24

Cam bolt
Ø6x35mm
B x 49

Cam lock
Ø15x9mm
C x 49

Bolt
Ø1/4*30mm
D x 3

Hex key
M4
E x 1

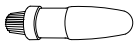

Glue tube
F x 1

Bolt
Ø1/4*12mm
G x 2

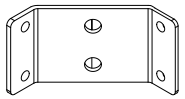

Metal piece
H x 4

Screw
Ø4x15mm
I x 16

Footpads
J x 4

Screw
Ø5x50mm
K x 5

Wood Screw
Ø3 x 16mm
L x 8

Plastic Wedge
M x 8

Screw
Ø3.5*14
N x 4

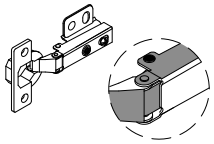

Hinge
Ø35mm
O x 8

Screw
Ø3.5x14mm
P x 48

WHAT'S IN THE BOX

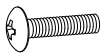

Handle bolt
Ø5/32*25mm

Q x 12

Shelf support pin

R x 4

Screw
Ø4*12

S x 2

Screw
Ø4*25

T x 2

Plastic strap

U x 2

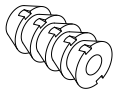

Nut

V x 2

Hex key
M3

W x 1

●The provided glue(F) is to secure wood dowels(A) in place .
When first inserting dowels, locate the appropriate hole for the dowel , place a small amount of glue in the hole and insert the dowel .
Wipe away excess glue immediately.

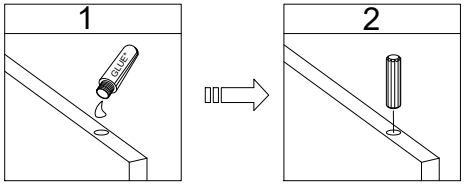

● In future assembly steps when dowels are necessary to attach assembly parts together, place a small amount of glue on the end of the dowel before attaching parts together.
Wipe away excess glue immediately.

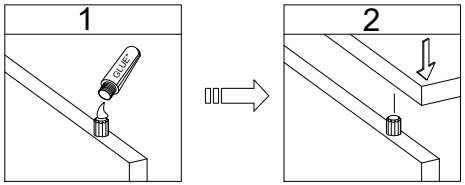

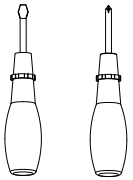

Tools Required
(Not included)

1

INSTALLATION STEPS

●Unpack the unit and confirm that you have all the hardware and required parts.
Assemble the unit on a carpeted floor or the empty carton to avoid any scratches.

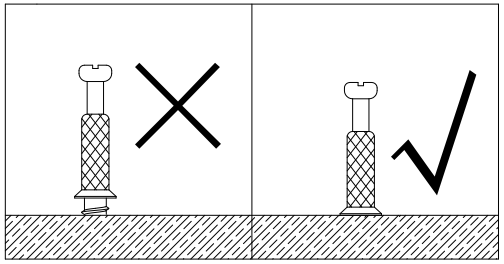

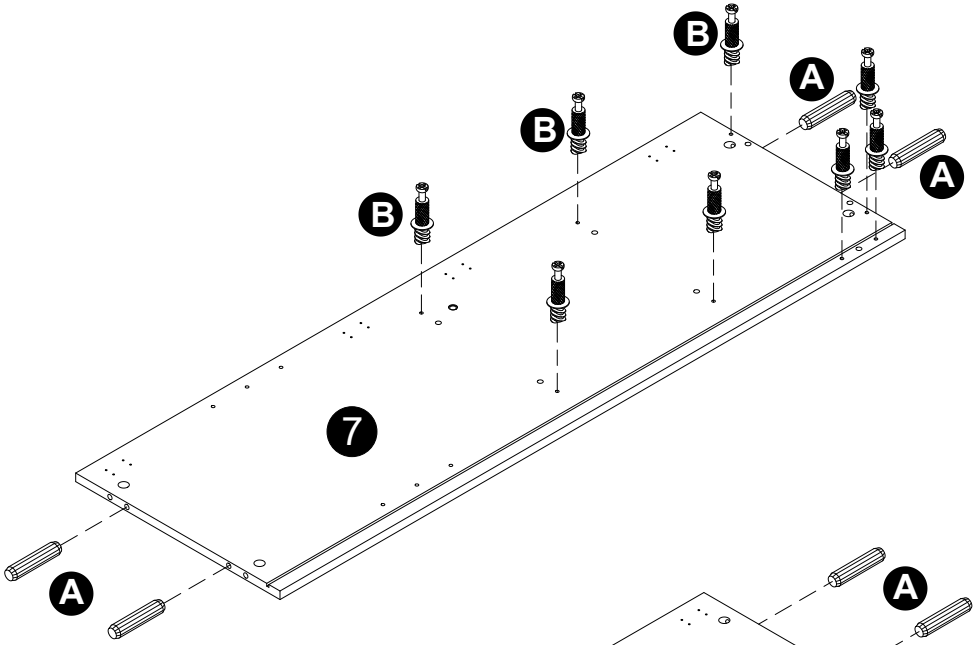

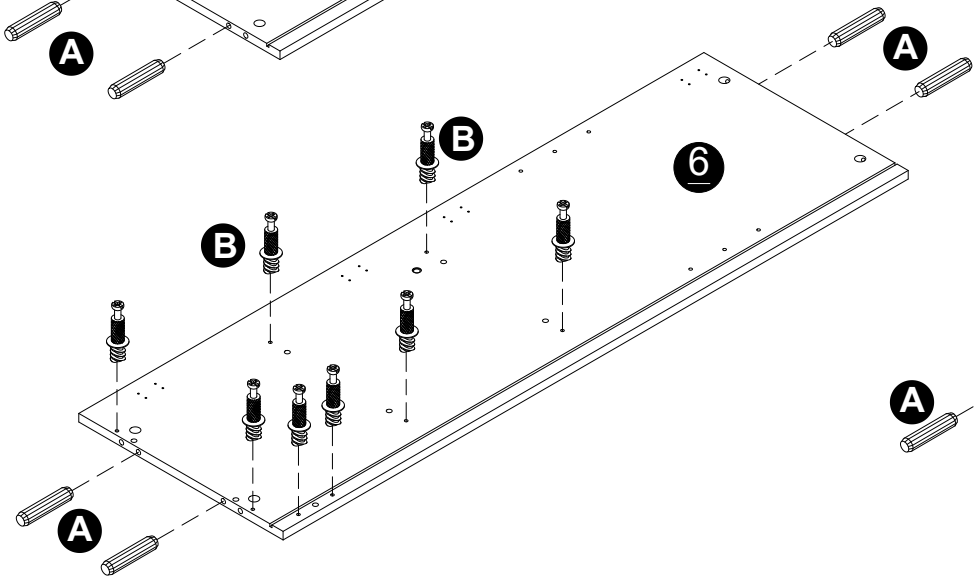

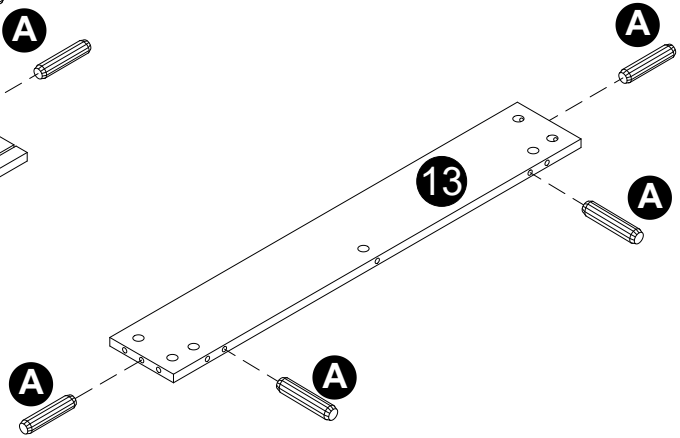

· Screw cam bolts (B) into panels (6,7).
· Insert dowels (A) into panels (6,7,13).

B x 16	A x 12	F
	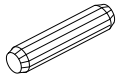	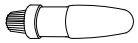

2

INSTALLATION STEPS

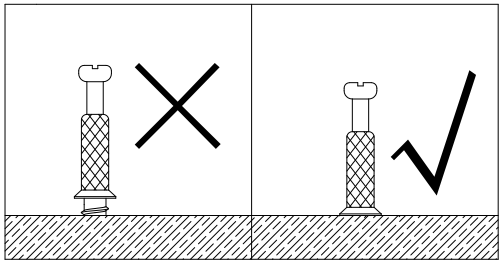

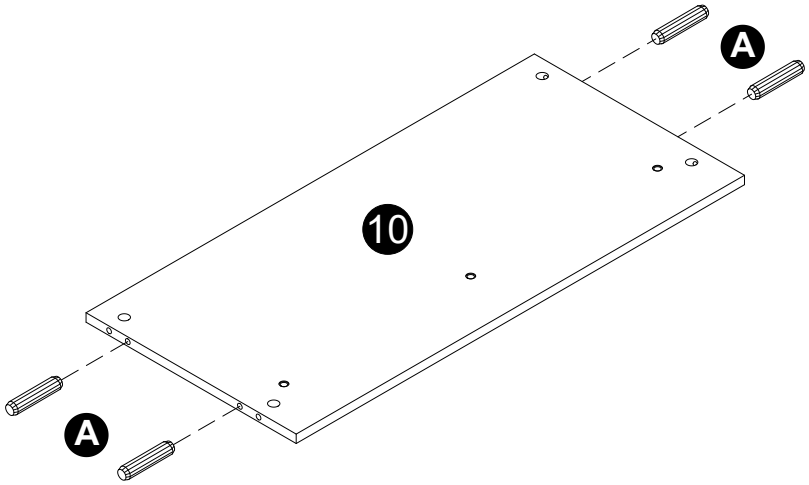

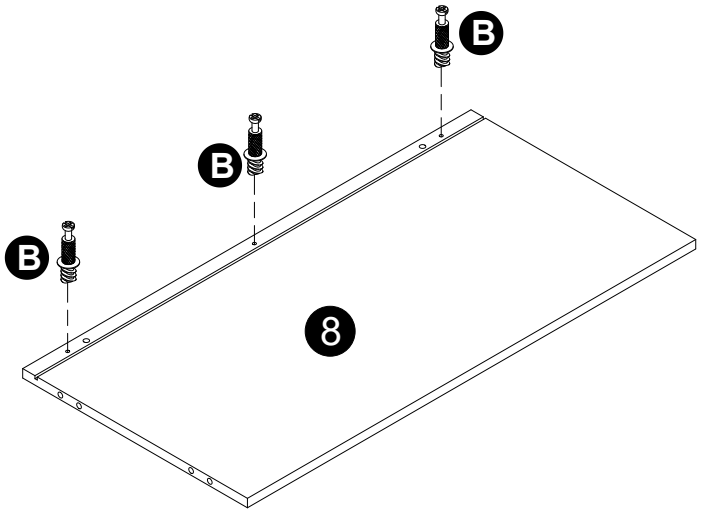

Turn the panel over

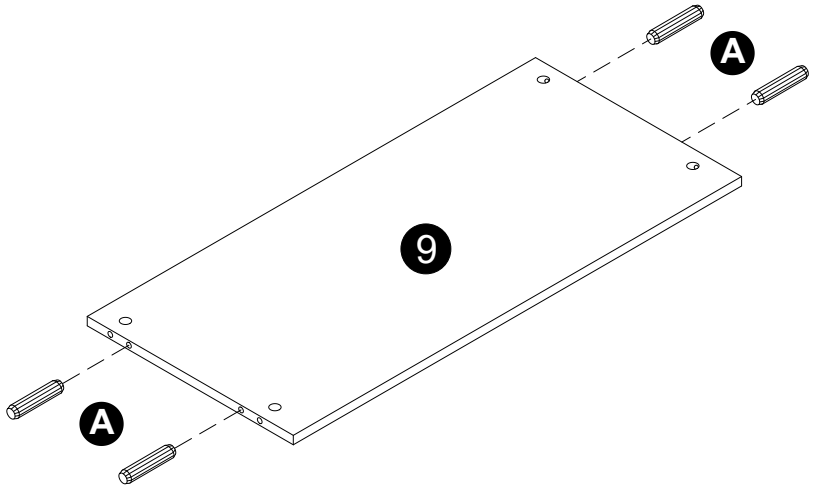

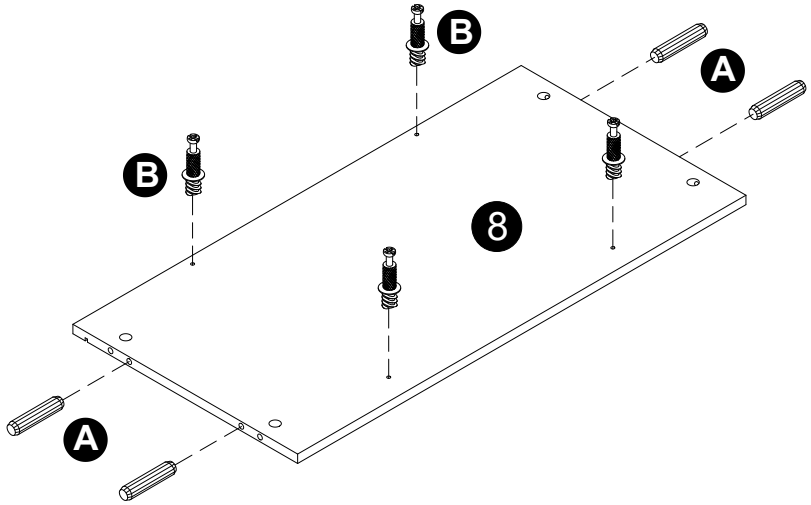

· Screw cam bolts (B) into panel (8).
· Insert dowels (A) into panels (8,9,10).

B x 7	A x 12	F
	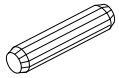	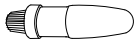

3

INSTALLATION STEPS

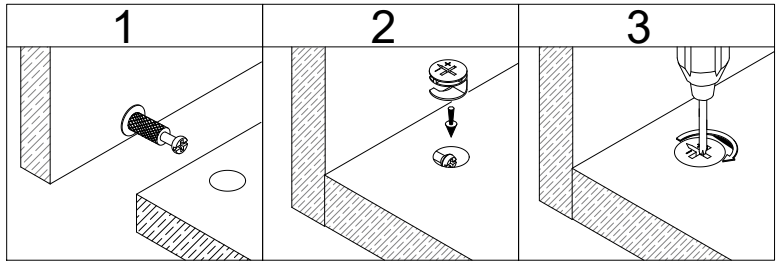

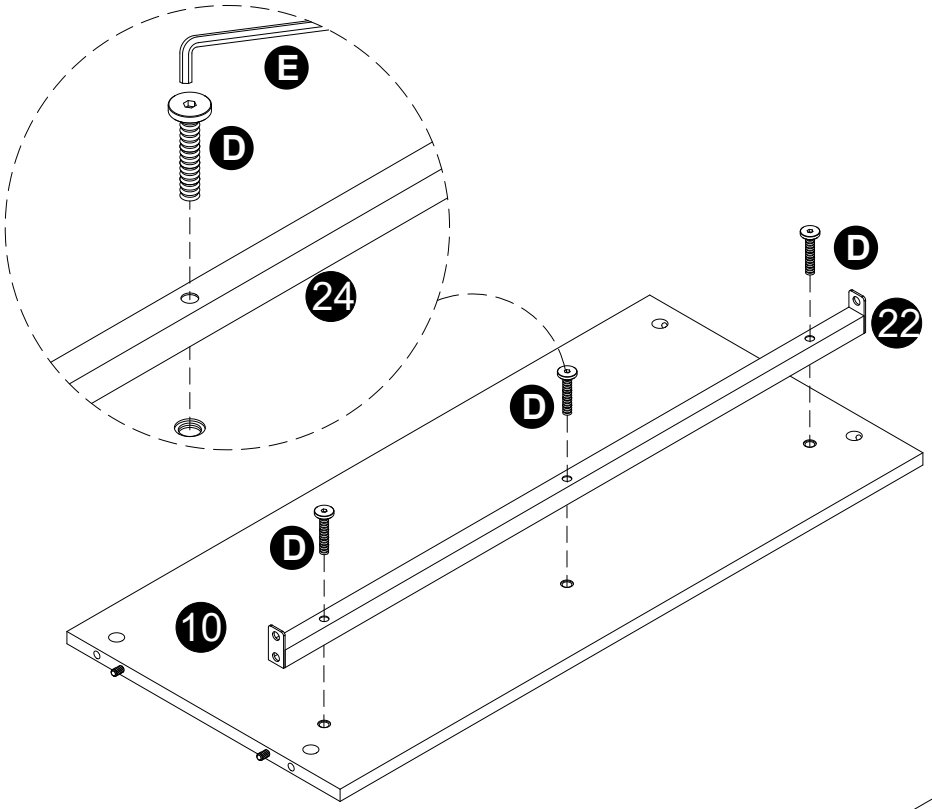

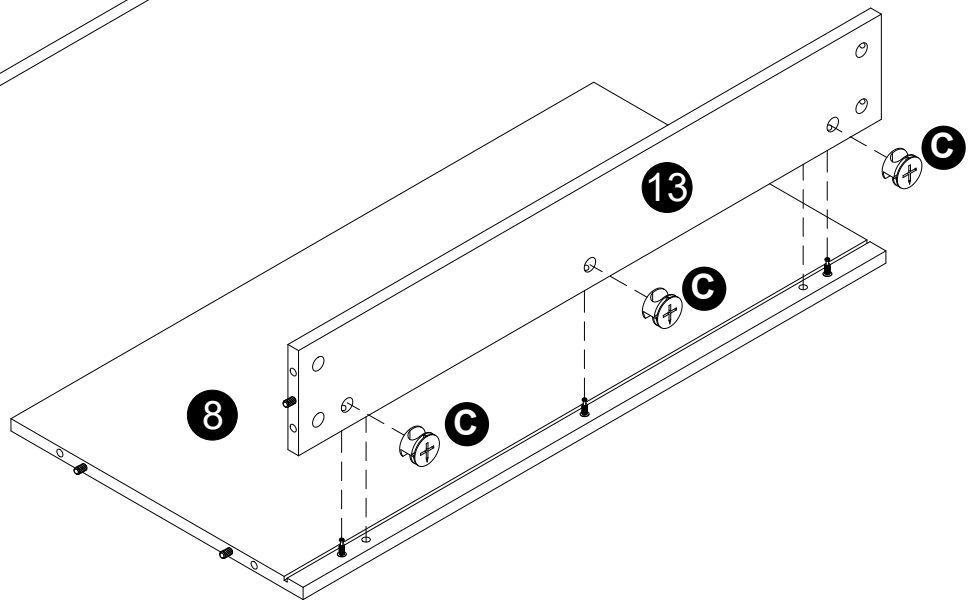

· Attach part (22) to panel (10) with parts (D,E).
· Attach panel (13) to panel (8).
· Insert and secure cam locks (C) to panel (13) to lock it.

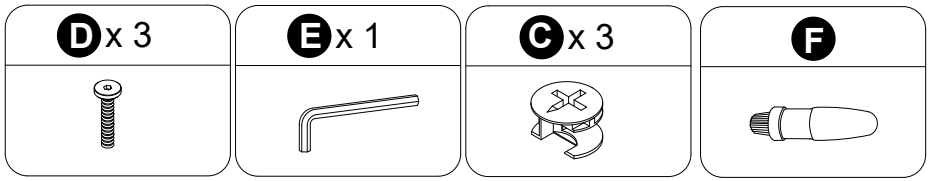

4

INSTALLATION STEPS

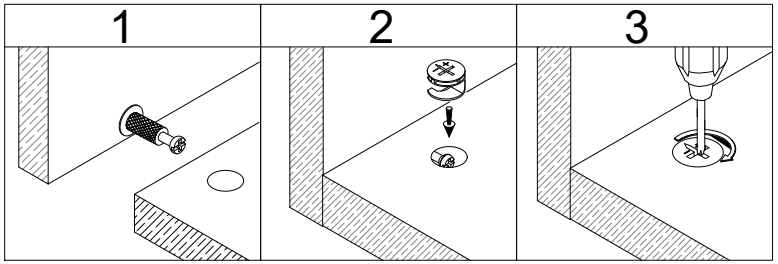

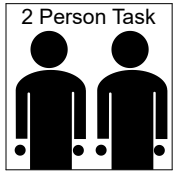

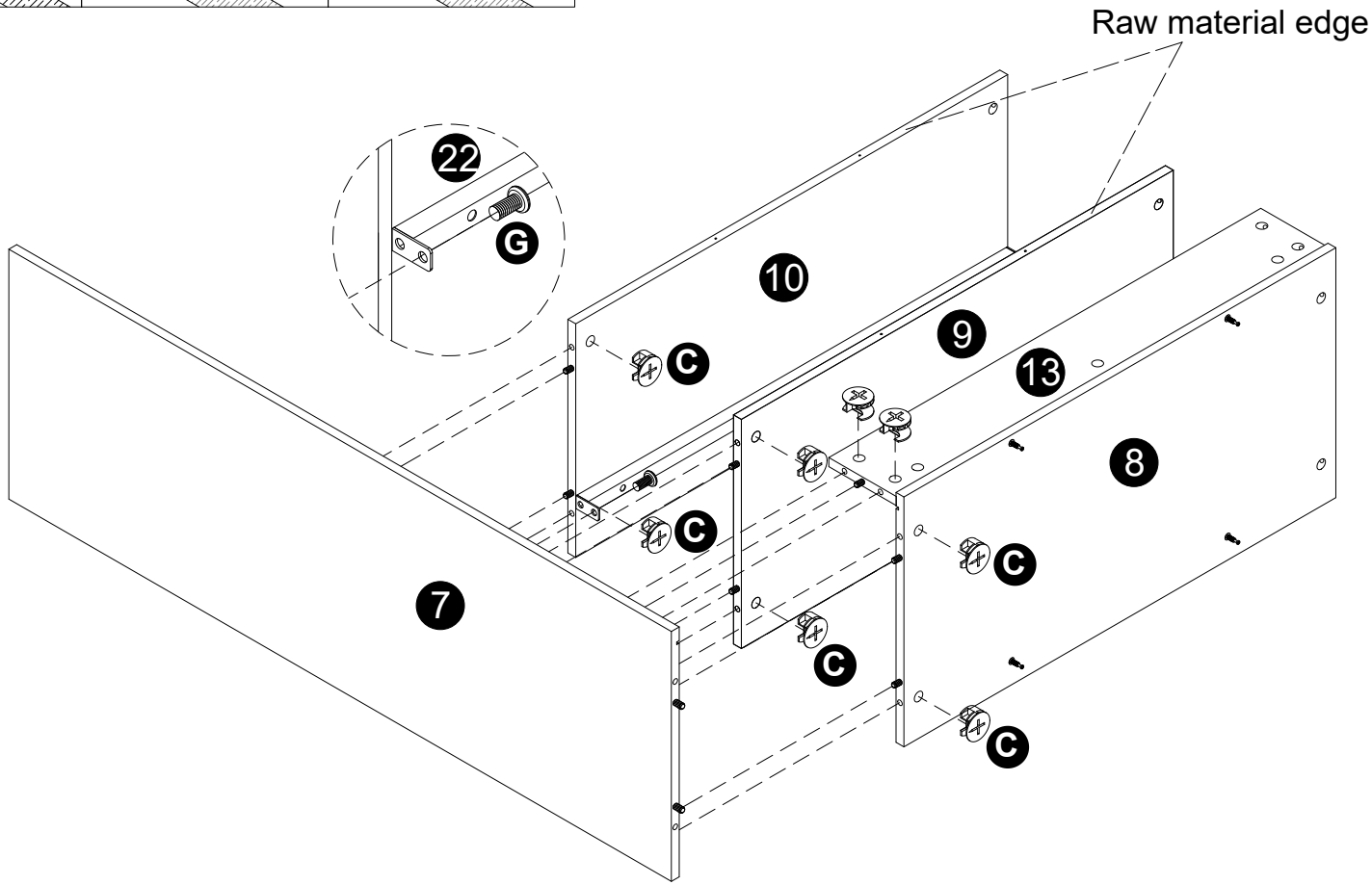

· Attach panel (7) to panels (8,9,10,13).
· Insert and secure cam locks (C) to panels (8,9,10,13) to lock it.
· Attach part (22) to panel (7) with parts (G,E).

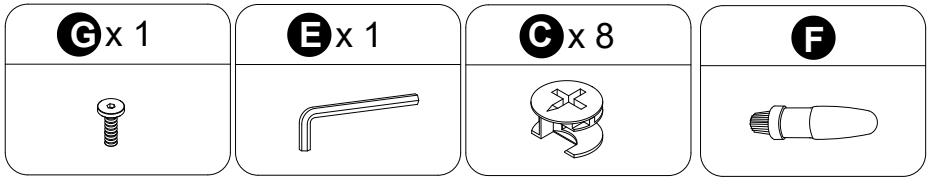

5

INSTALLATION STEPS

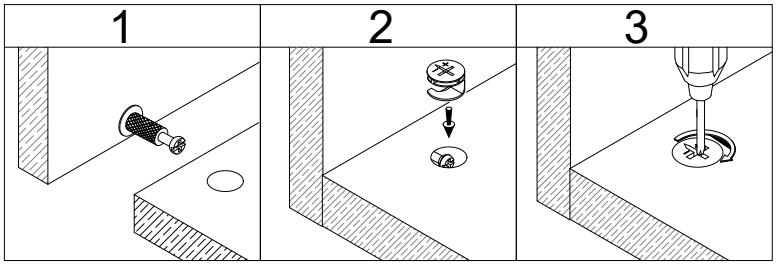

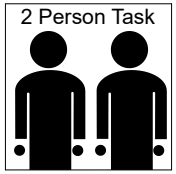

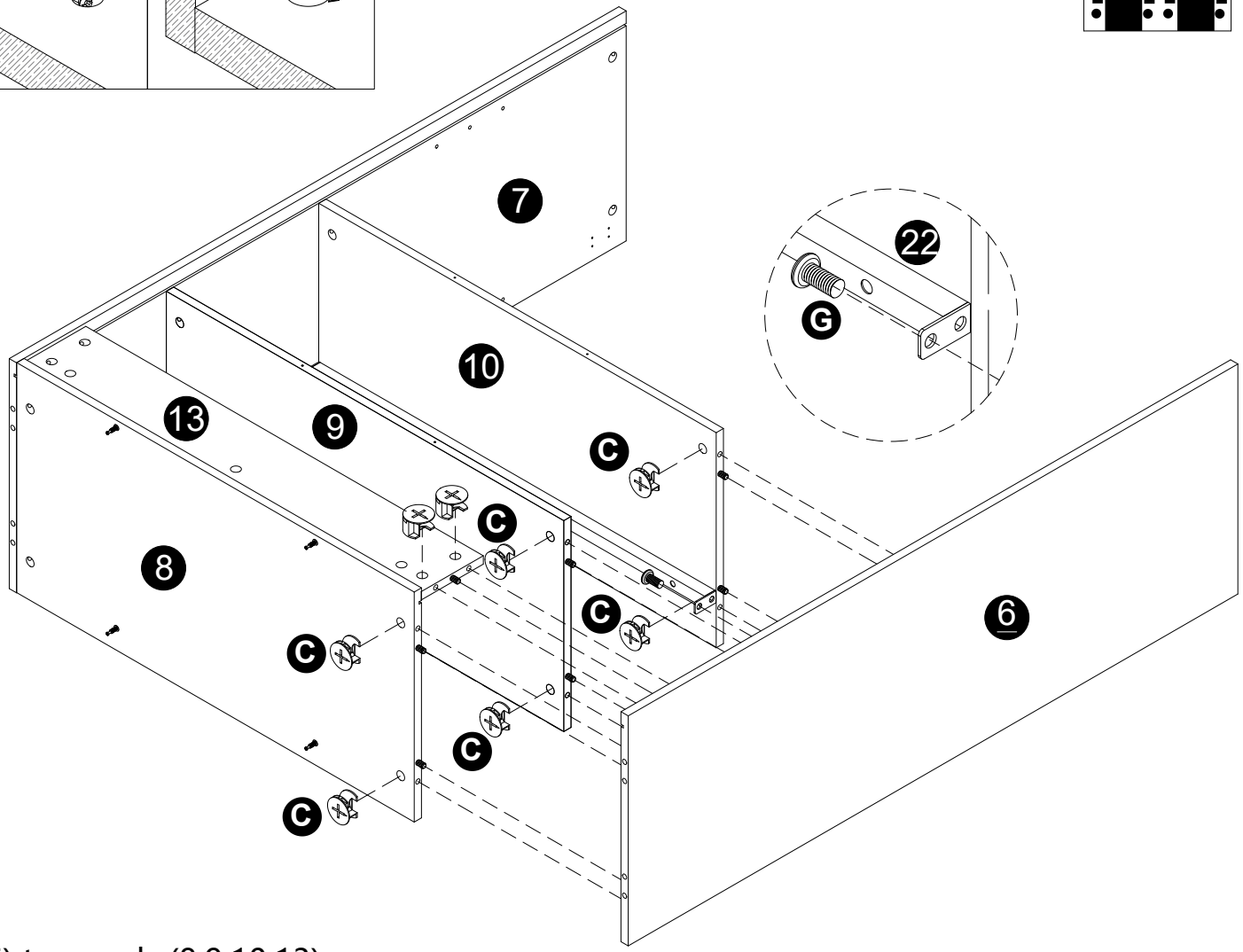

· Attach panel (6) to panels (8,9,10,13).
· Insert and secure cam locks (C) to panels (8,9,10,13) to lock it.
· Attach part (22) to panel (6) with parts (G,E).

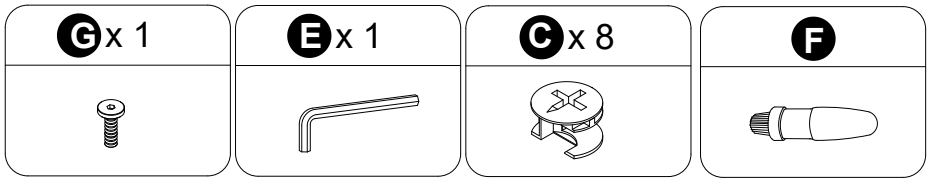

6

INSTALLATION STEPS

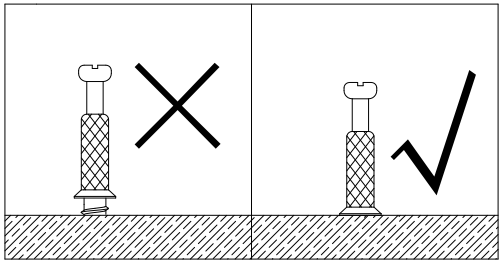

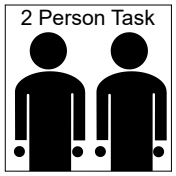

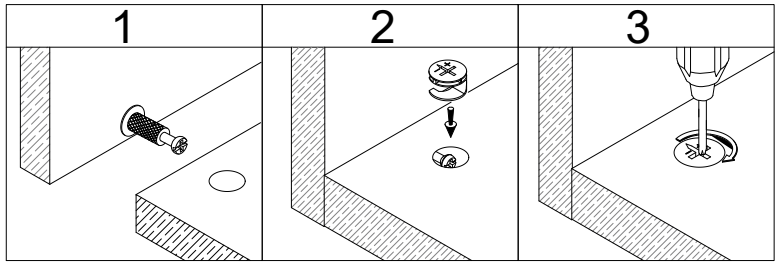

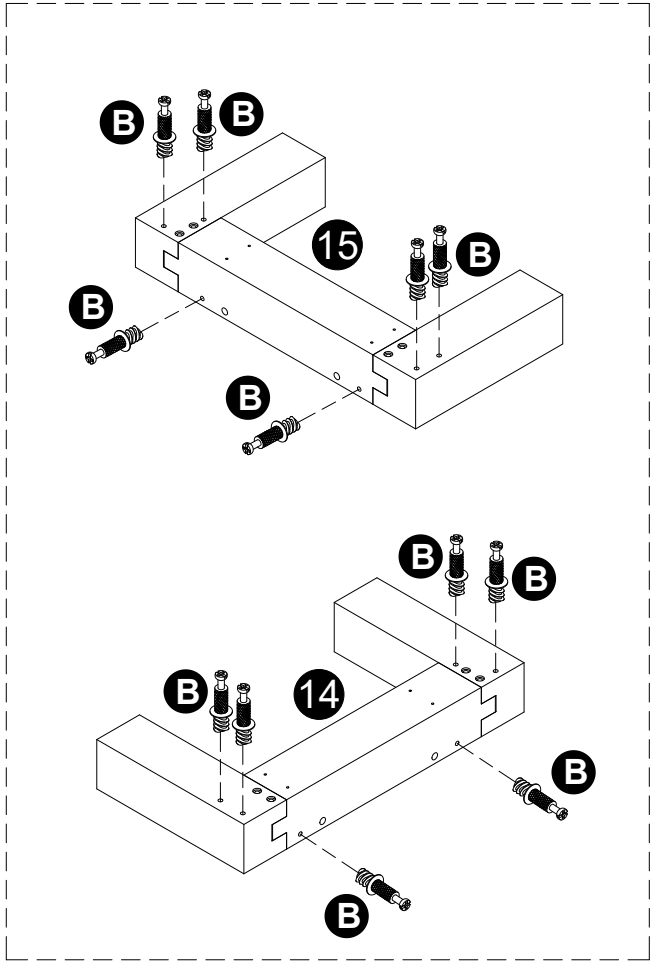

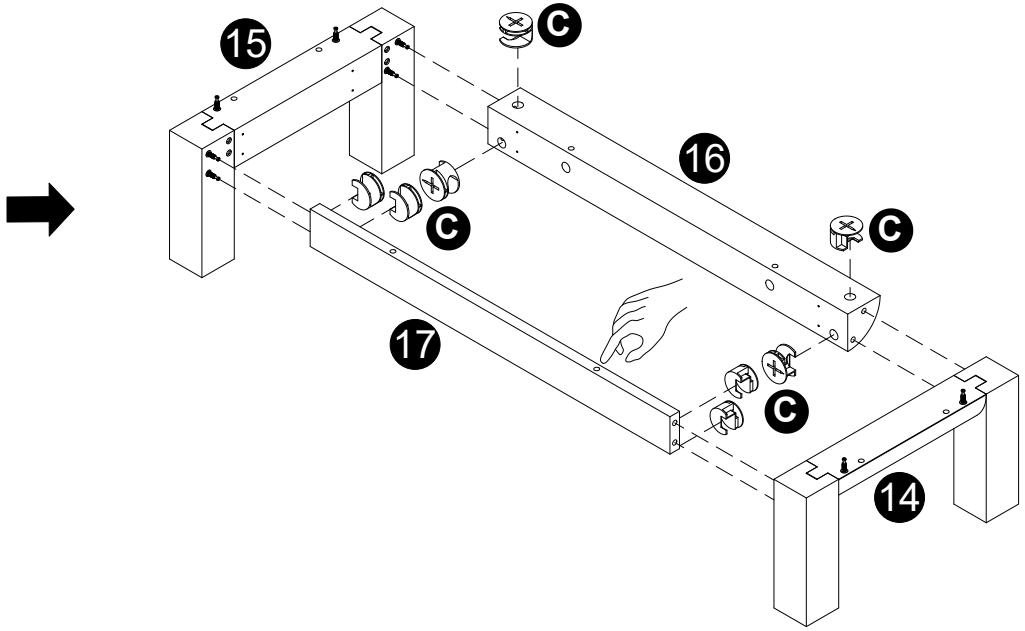

- Screw cam bolts (B) into panels (14,15).
- Attach panels (14,15) to panels (16,17).
- Insert and secure cam locks (C) to panels (16,17) to lock it.

B x 12	C x 8

7

INSTALLATION STEPS

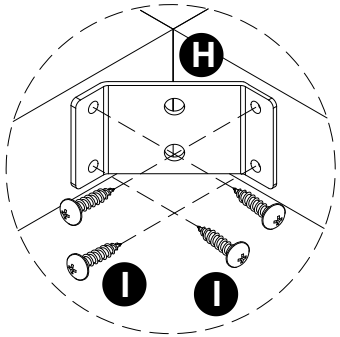

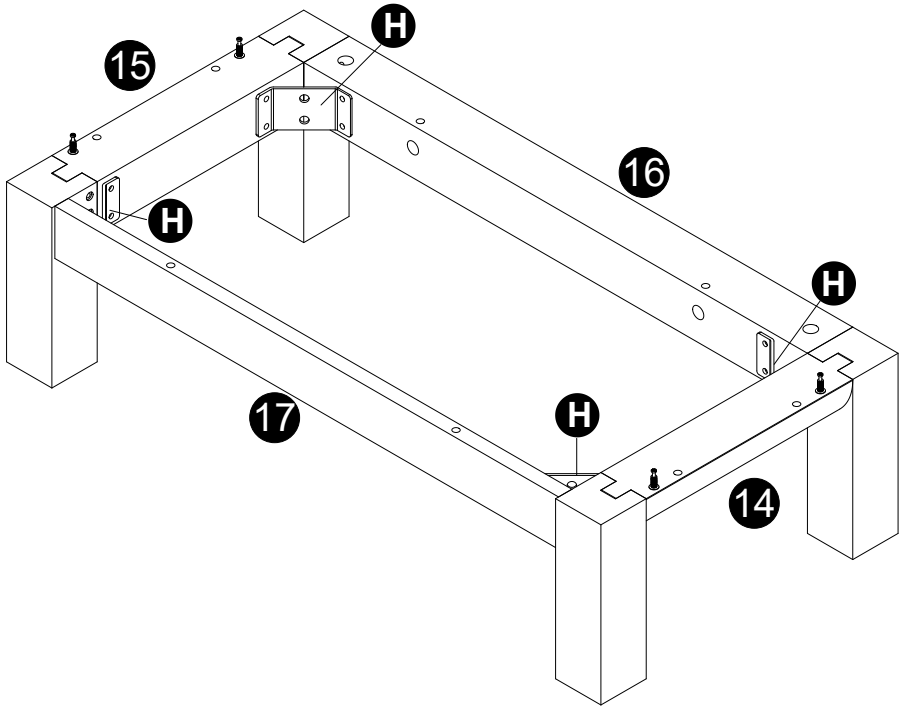

· Attach parts (H) to panels (14,15,16,17) with screws (I).

H x 4	I x 16
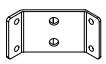	

8

INSTALLATION STEPS

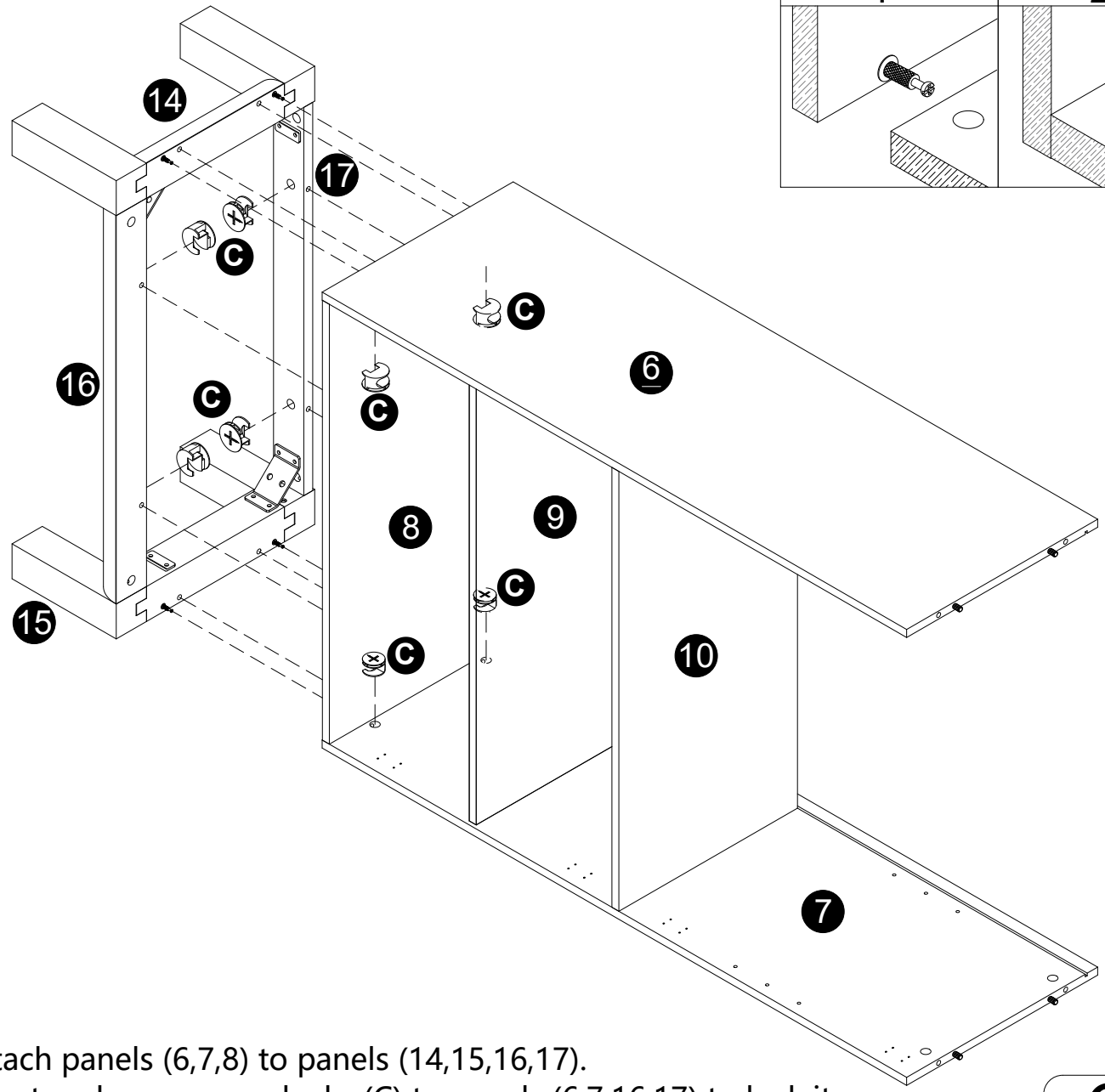

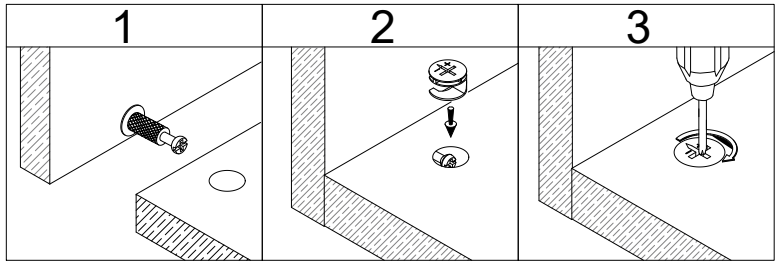

· Attach panels (6,7,8) to panels (14,15,16,17).
· Insert and secure cam locks (C) to panels (6,7,16,17) to lock it.

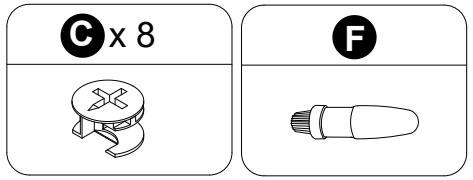

9

INSTALLATION STEPS

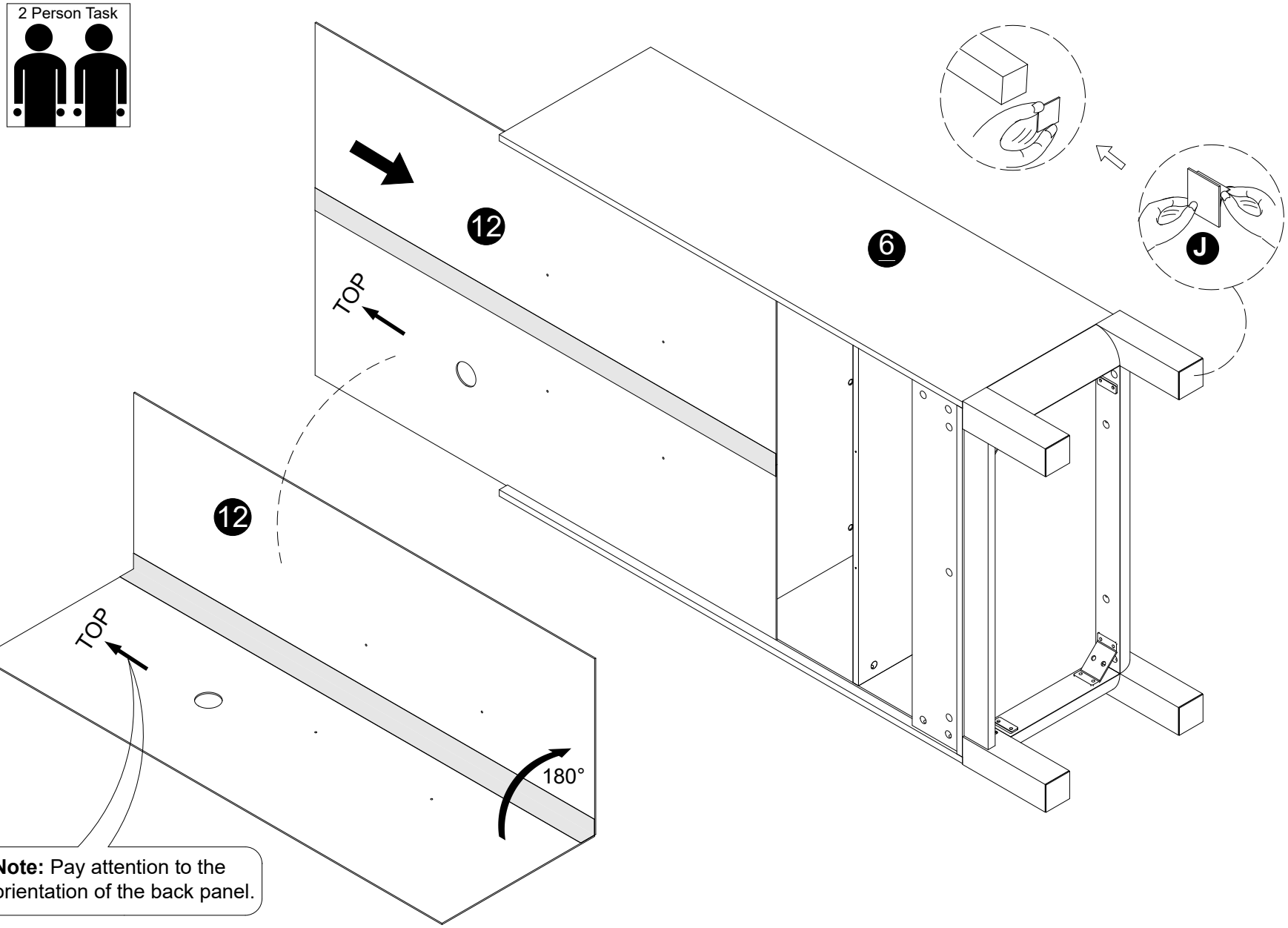

Note: Pay attention to the orientation of the back panel.

J x 4

· Carefully slide panel (12) into place along the bottom of the assembly.
· Stick the skid pads (J) on the bottom of the legs.

10

INSTALLATION STEPS

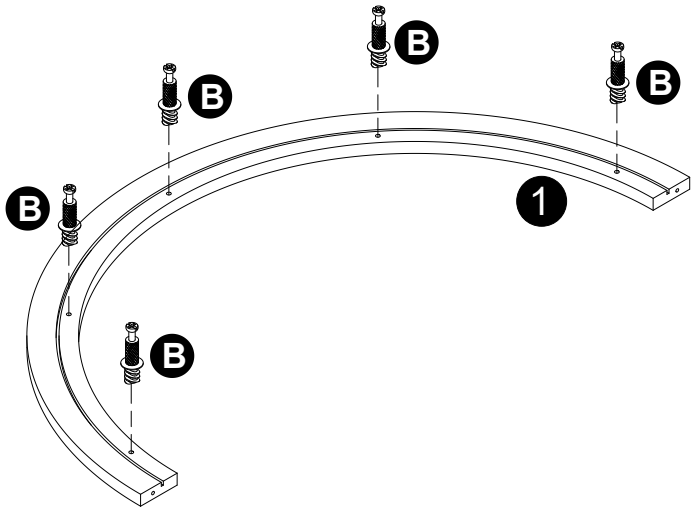

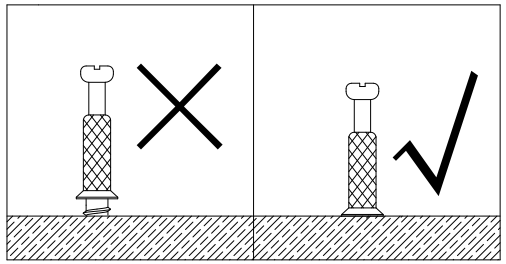

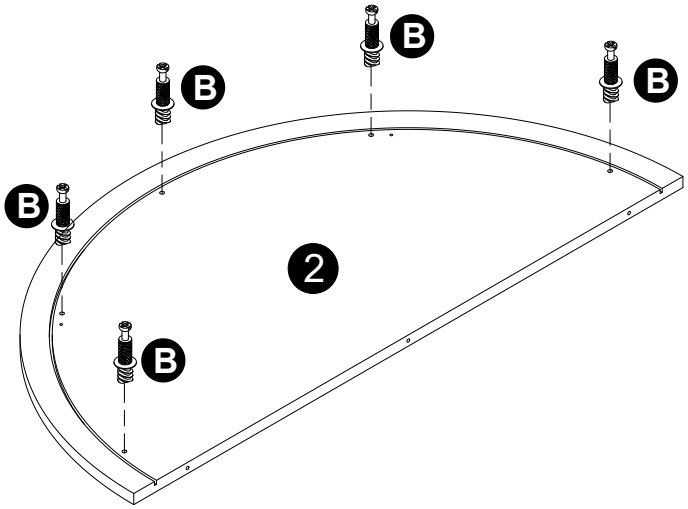

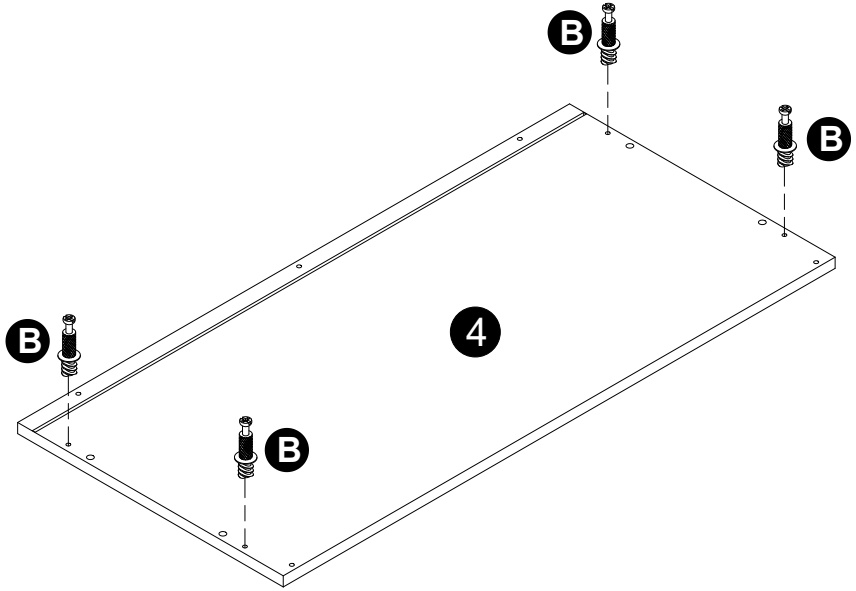

· Screw cam bolts (B) into panels (1,2,4).

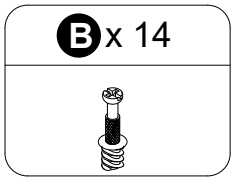

11

INSTALLATION STEPS

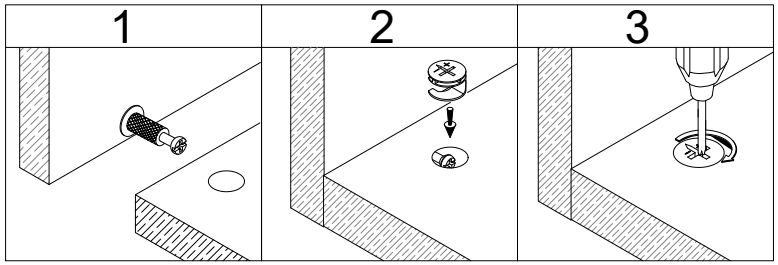

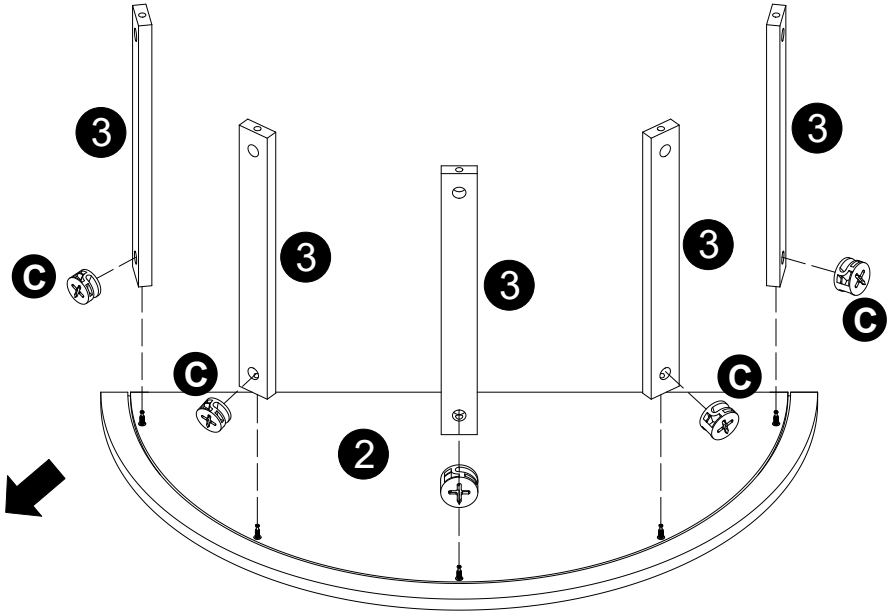

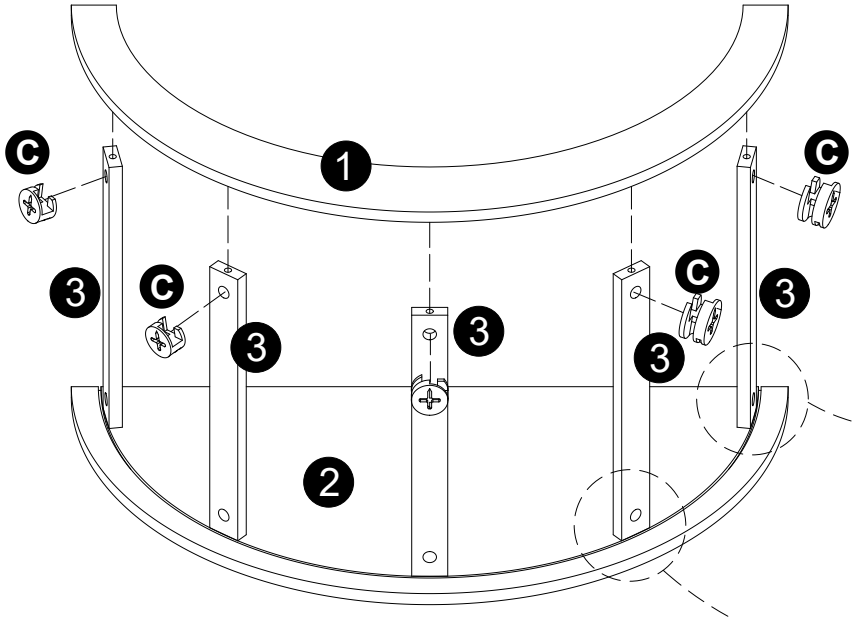

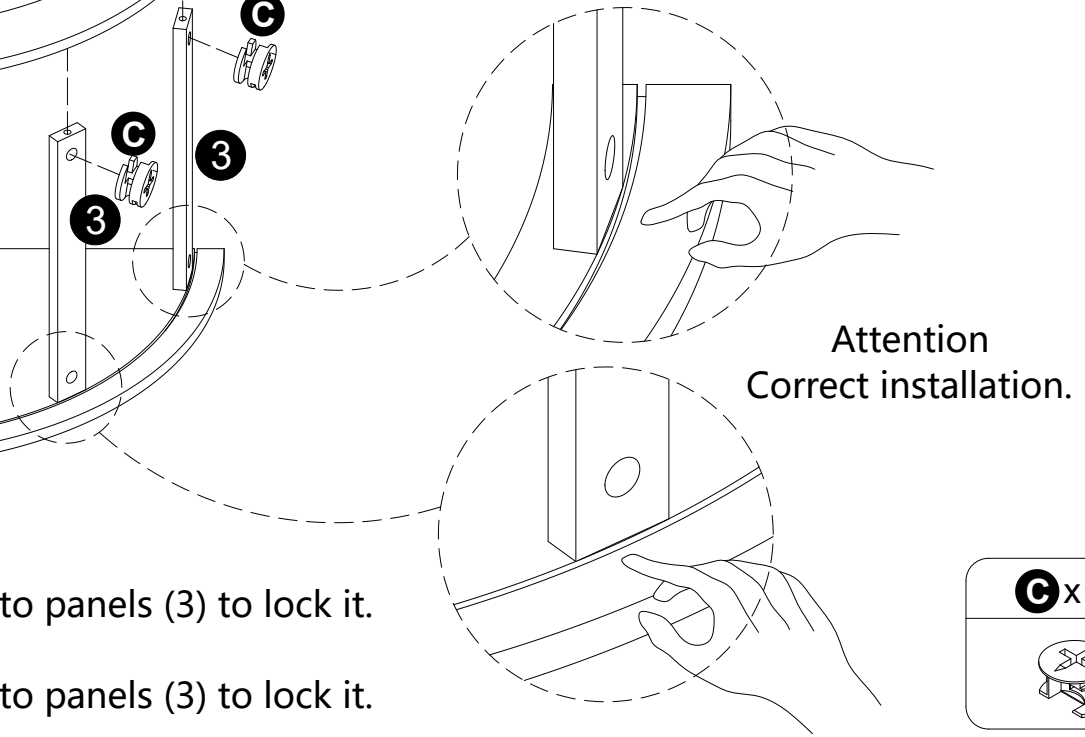

Attention
Correct installation.

· Attach panels (3) to panel (2).
· Insert and secure cam locks(C) to panels (3) to lock it.
· Attach panels (1) to panels (3).
· Insert and secure cam locks(C) to panels (3) to lock it.

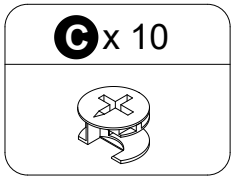

12

INSTALLATION STEPS

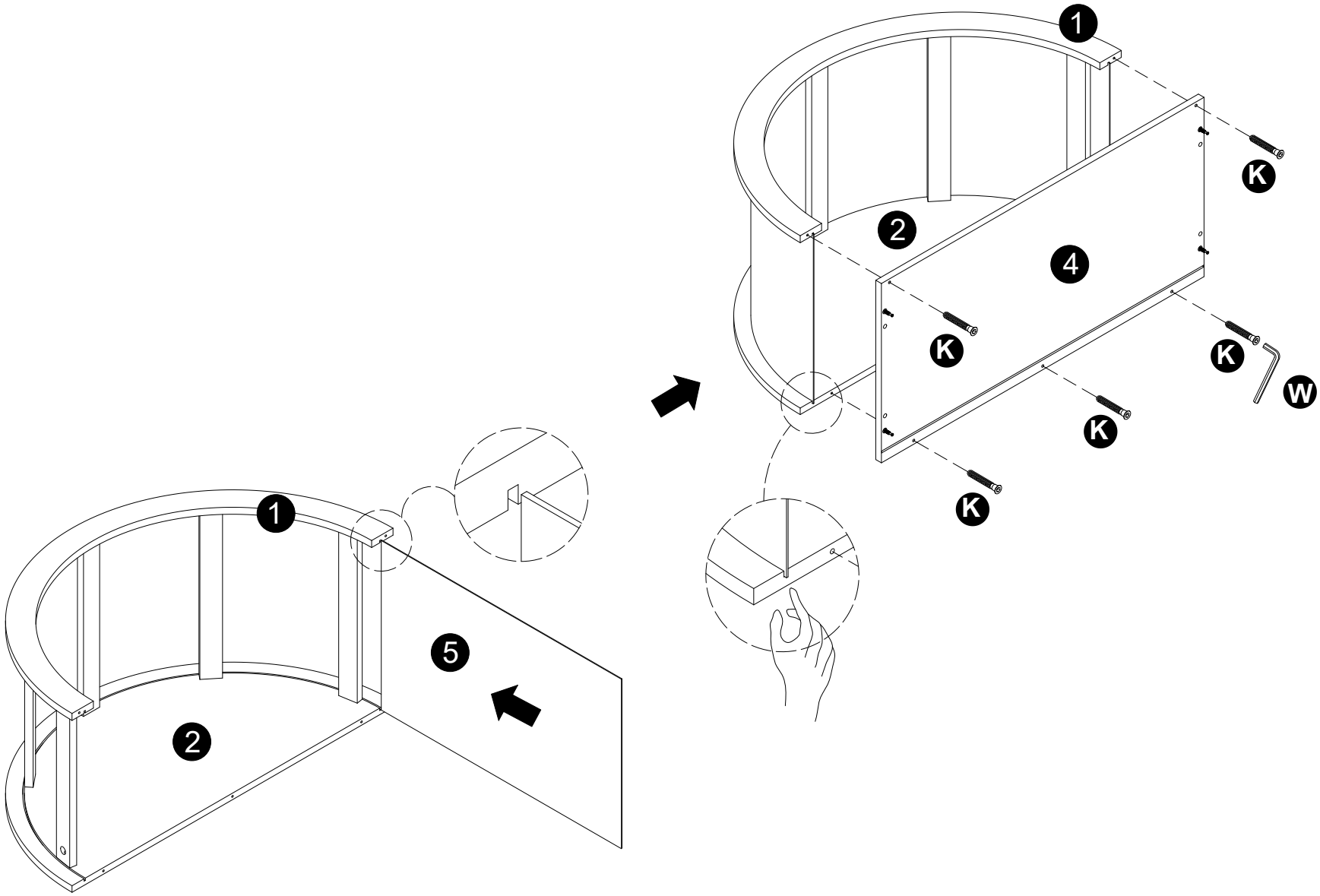

· Carefully slide panels (5) into place along the back of the assembly.
· Attach panel (4) to panels (1,2) with parts (K,W).

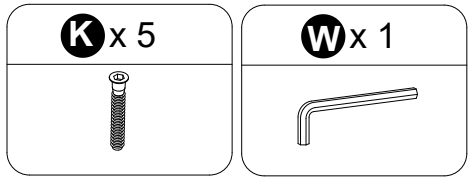

13

INSTALLATION STEPS

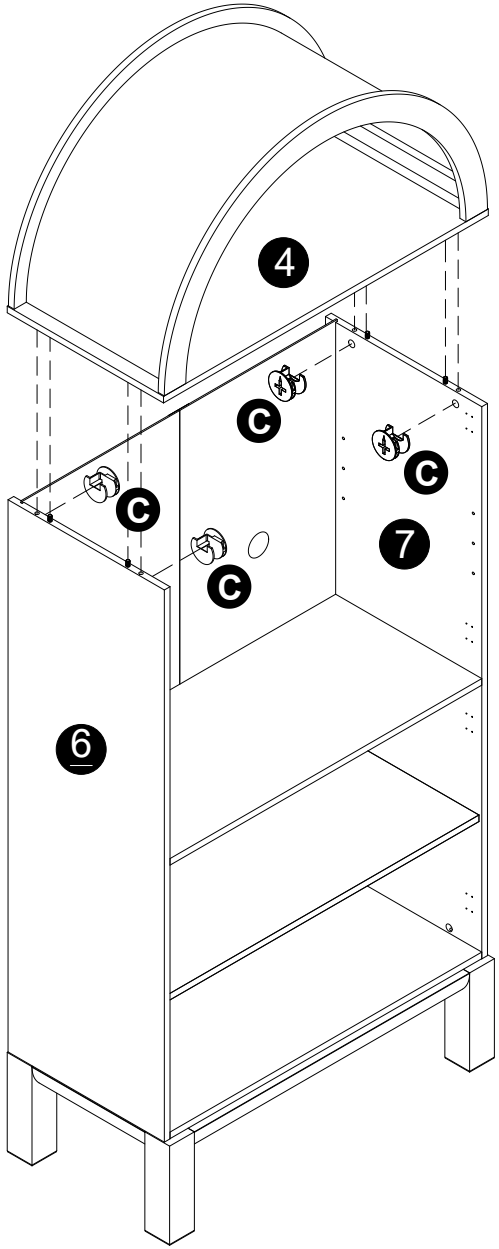

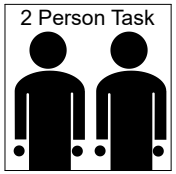

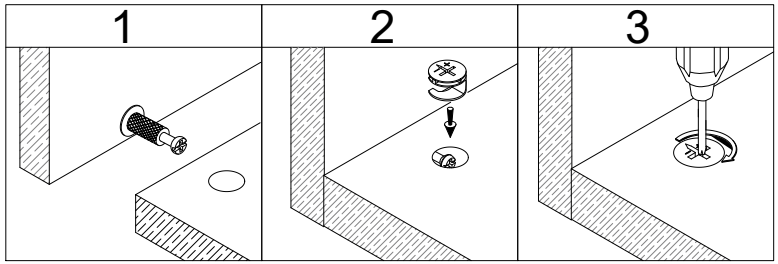

· Attach part (4) to panels (6,7).
· Insert and secure cam locks(C) to panels (6,7) to lock it.

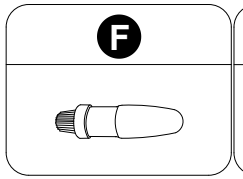

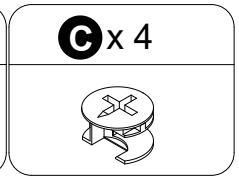

14

INSTALLATION STEPS

NOTE: Ensure the cabinet body is stable, please make sure to lock the plastic wedge.

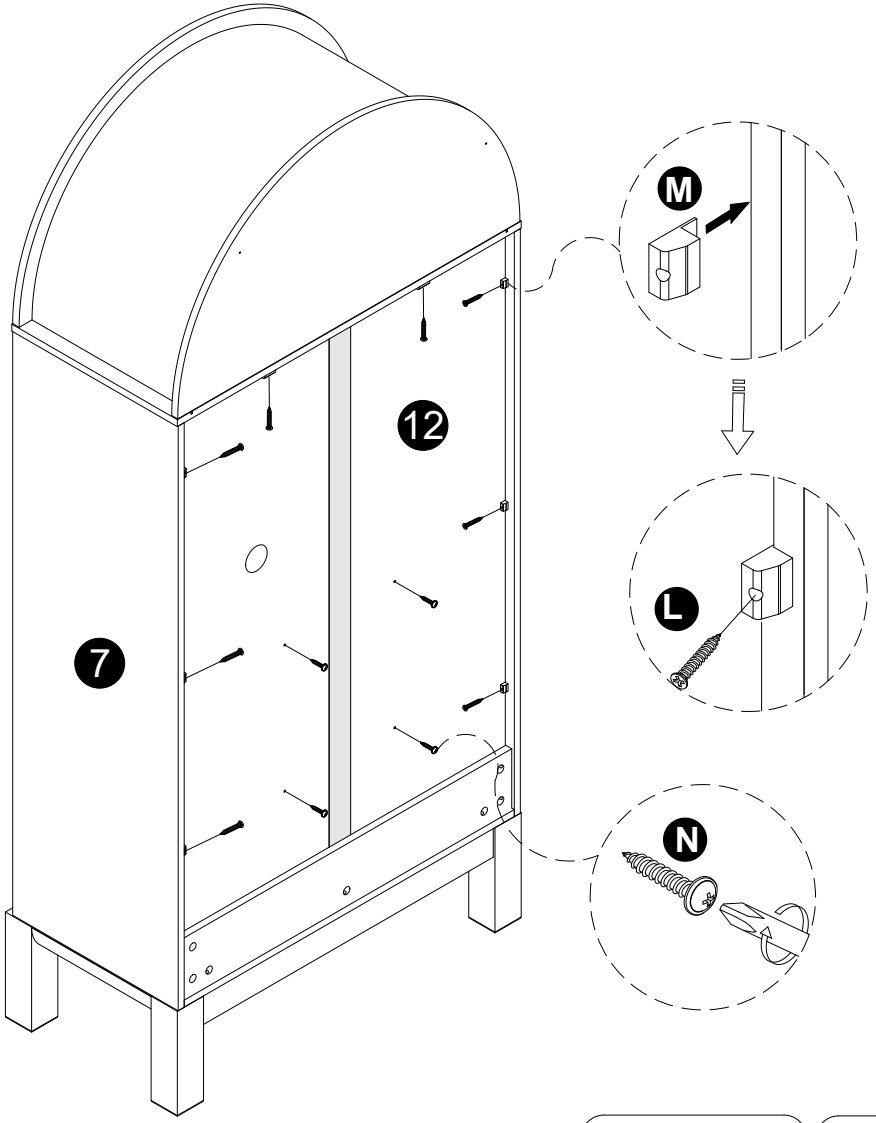

· Secure parts (M) with screws (L) as per diagram.
· Attach screws (N) to panel (12).

L x 8	M x 8	N x 4

15

INSTALLATION STEPS

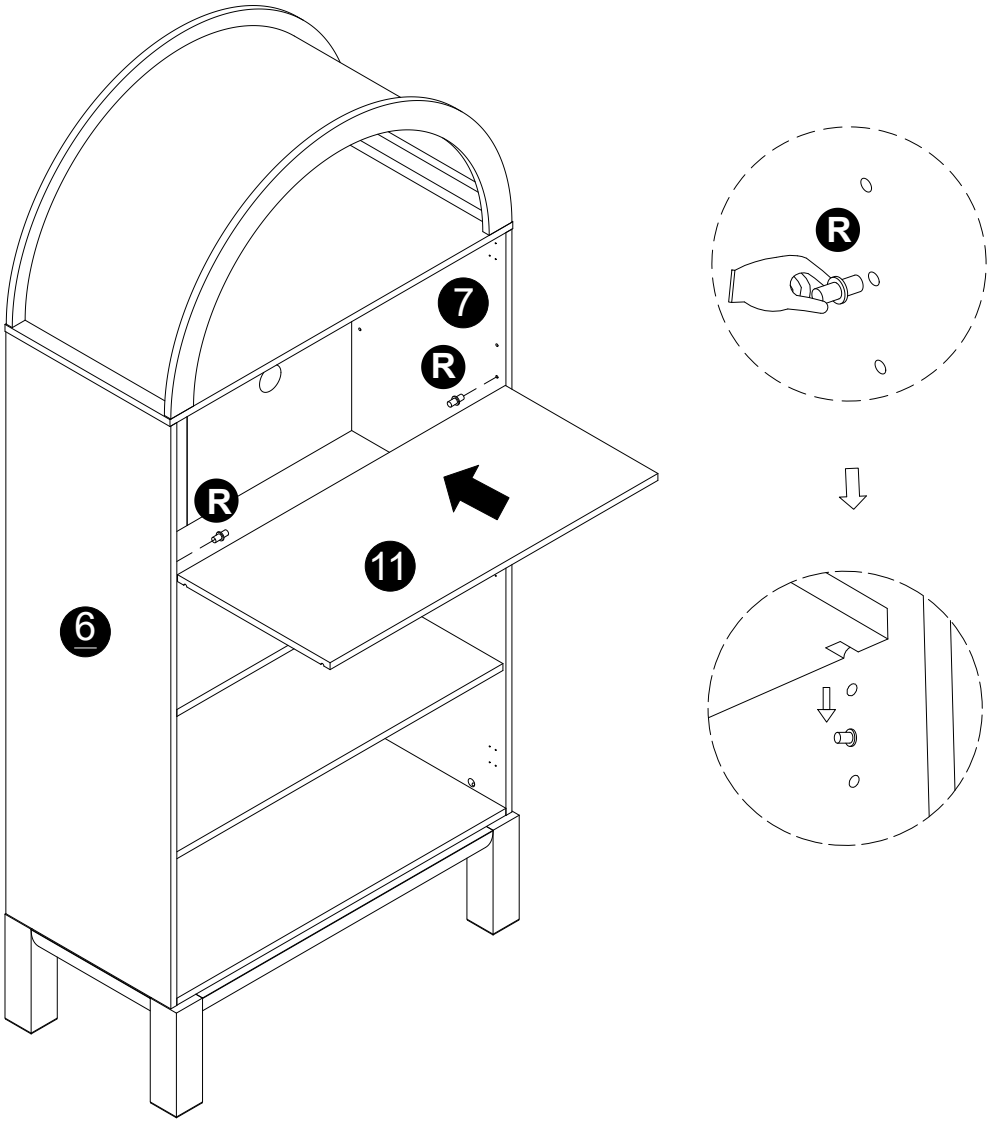

· Attach panel (11) to panels (6,7) using parts (R).

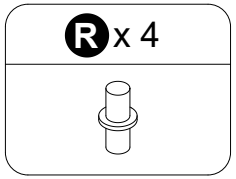

16

INSTALLATION STEPS

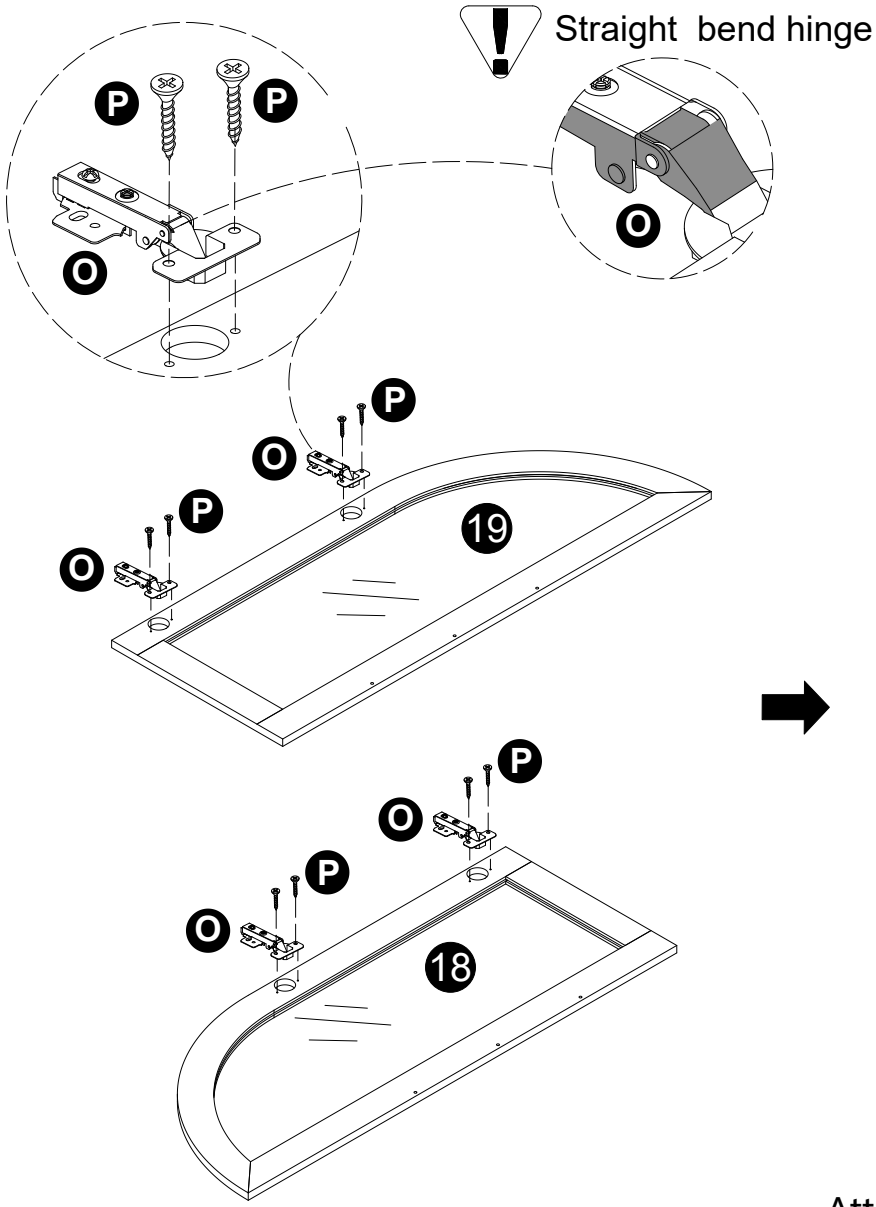

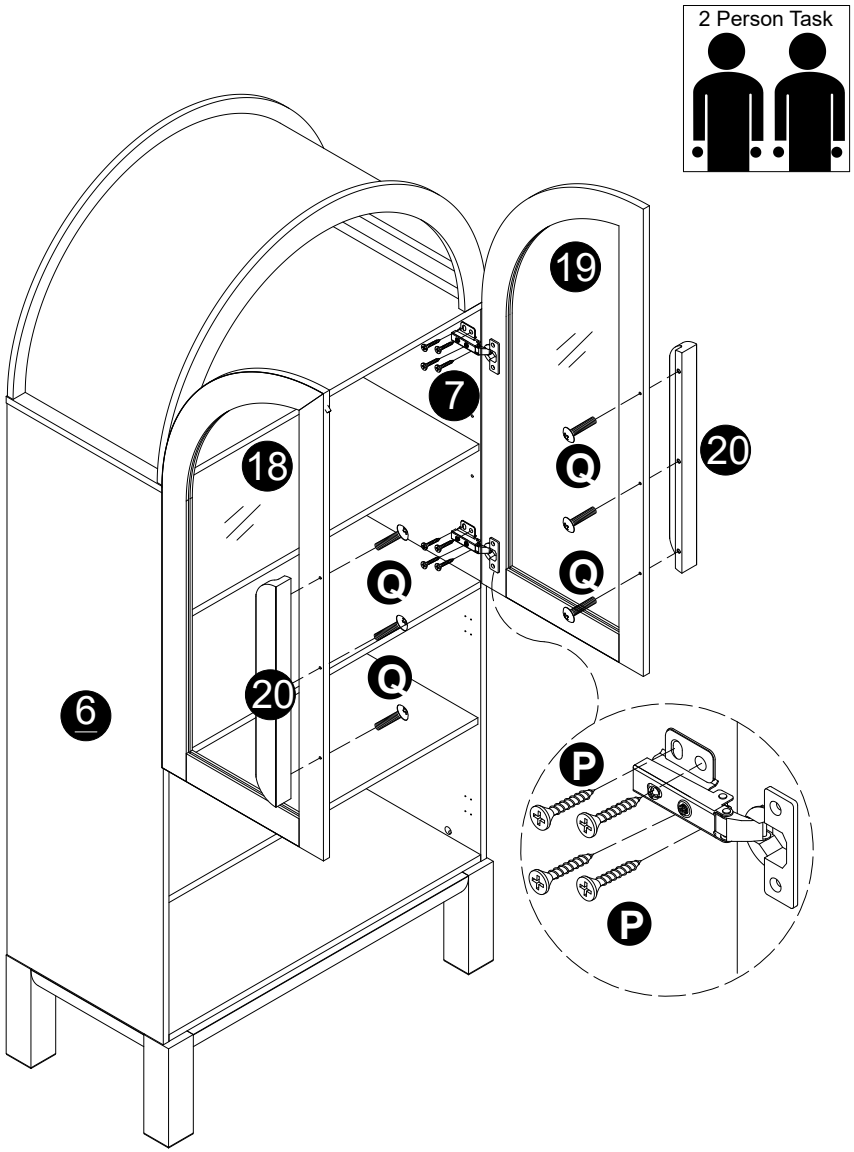

O x 4	P x 24	Q x 6
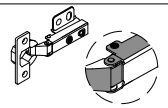		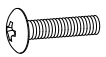

· Attach parts (O) to panels (18,19) with screws (P) correctly.
· Attach part (18) to panel (6) with screws (P) correctly.
· Attach part (19) to panel (7) with screws (P) correctly.
· Secure parts (20) into panels (18,19) using bolts (Q).

17

INSTALLATION STEPS

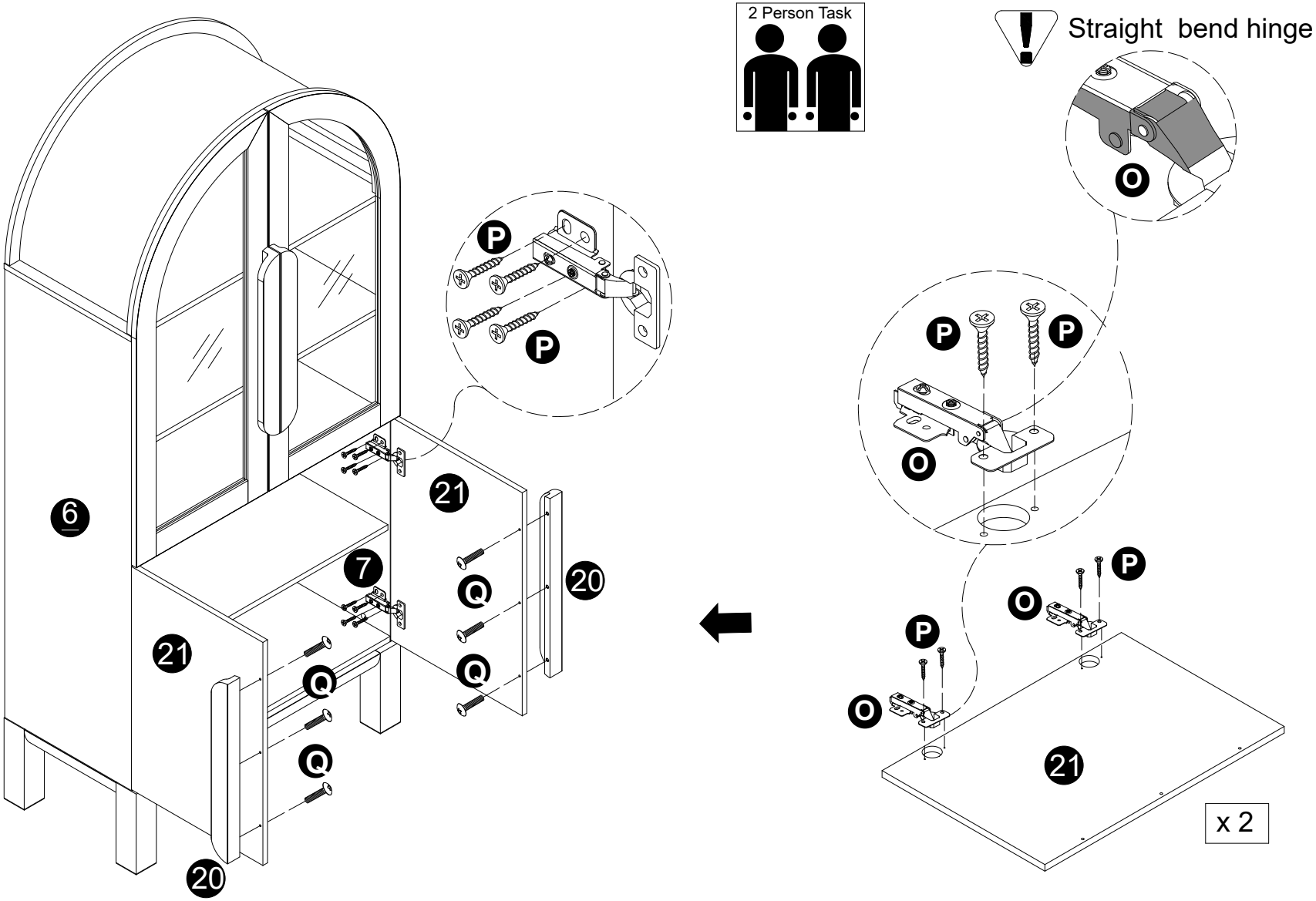

O x 4	P x 24	Q x 6
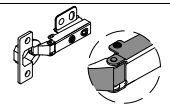		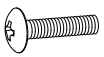

· Attach parts (O) to panels (21) with screws (P) correctly.
· Attach panels (21) to panels (6,7) with screws (P) correctly.
· Secure parts (20) into panels (21) using bolts (Q).

18

INSTALLATION STEPS

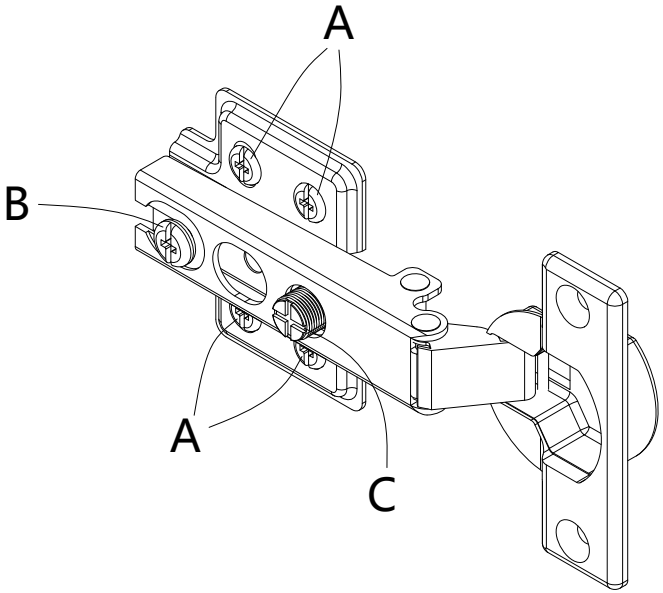

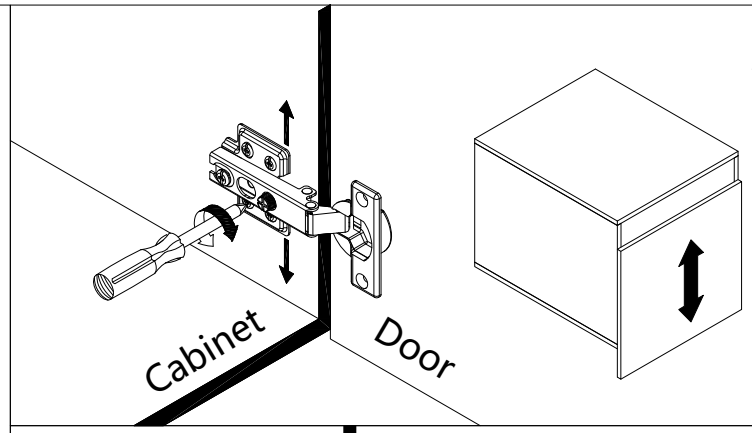

· To adjust the vertical height.

Loosen the four screws "A" on both hinges. Two of them are usually in slotted holes which mean and you can adjust up or down by a few mm.
Then tighten back up.

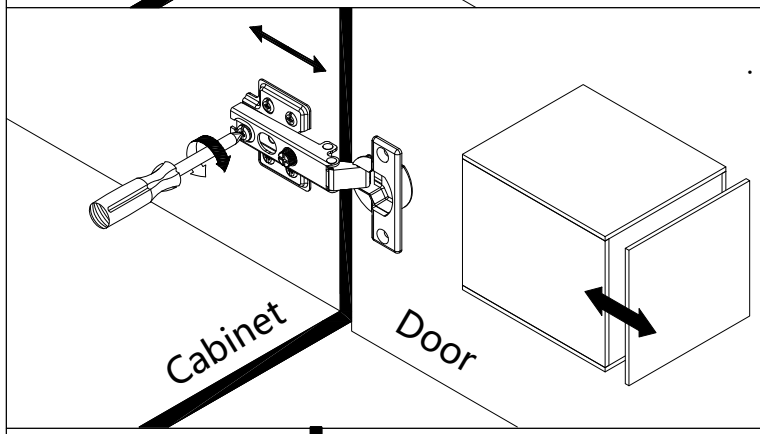

· To adjust depth.

Loosen screw"B" and adjust door, if the door can not be adjusted, please loosen screw "C", then try again.
Tighten screw "B" and "C".

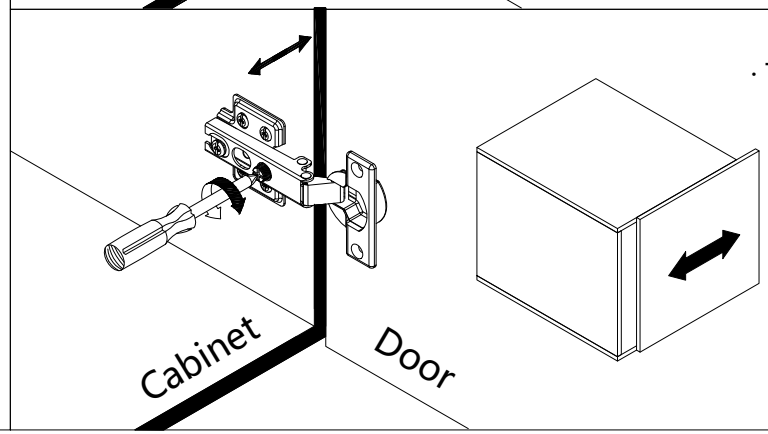

· To adjust side ways.

Turning the screw "C" on BOTH hinges on each door.

19

INSTALLATION STEPS

Step 1

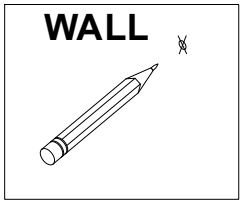

Step 2

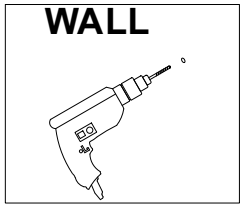

Tools required: Phillips screwdriver, Power Drill, 15/64” Drill Bit and Rubber Mallet.

Step 3

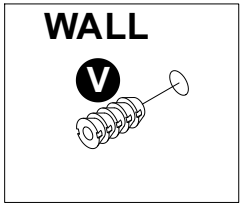

Step 4

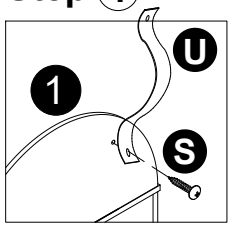

Step 5

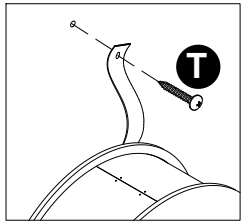

WARNING

Serious or fatal crushing injuries can occur from furniture tipover.
To prevent tipover:
* Install tipover restraint provided
* place heaviest items in the lowest drawers
* Unless specifically designed to accomodate, do not set TV or other heavy objects on the top of this product
* Never allow children to climb or hang on drawers, door, or shelves.
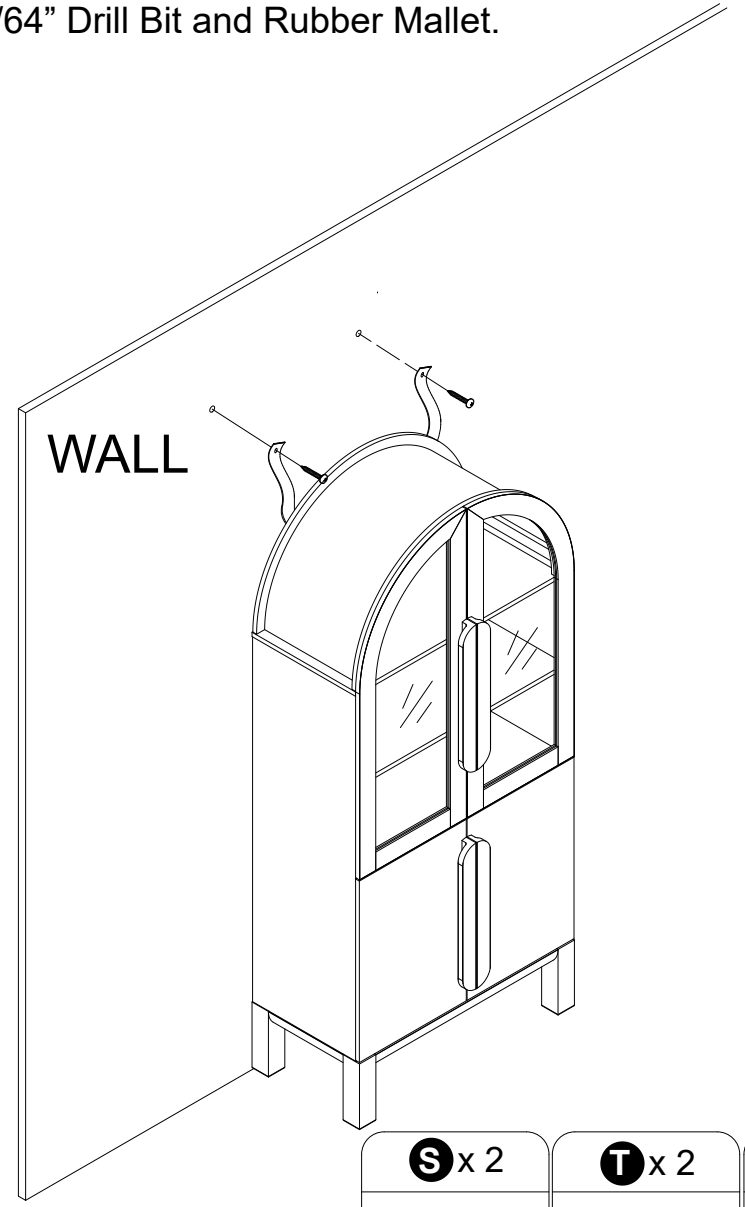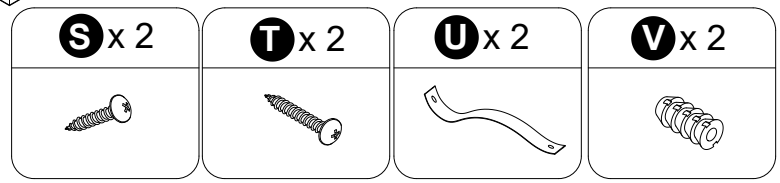
Use of tipover restarints may only reduce, but not eliminate the risk of tipover