44-WDC-WHT/RBR/GRE

SKU:44-WDC-WHT/RBR/GRE

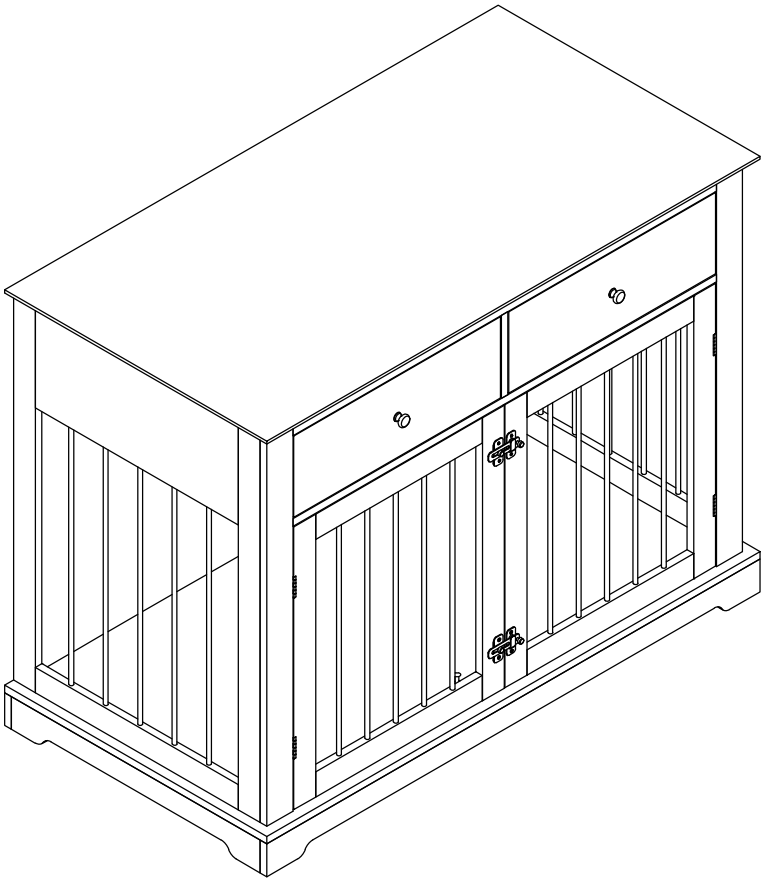

Scan the installation video to save 30 minutes on setup time.

Two people needed during installation

Missing parts, damages, and any problems in the
installation process, please contact us by text or email.
Please choose SMS or email as your first choice for communicating with us.

+1(503)928-7812 hellovitesse@gmail.com

Parts list

A 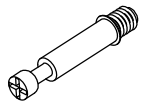 Ø6x35mm 44(+2)PCS	B 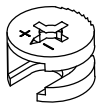 Ø15x10mm 44(+2)PCS	C 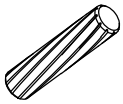 Ø6x30mm 57(+3)PCS	D 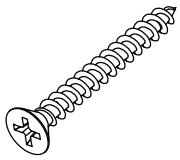 Ø4x35mm 28(+2)PCS
E  Ø3.5x12mm 118(+3)PCS	F  Ø3x12mm 2PCS	G 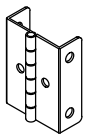 4PCS	H 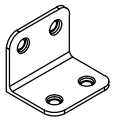 8PCS
I 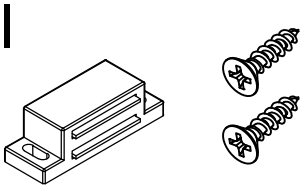 Ø3x16mm 1SRT	J  2PCS	K 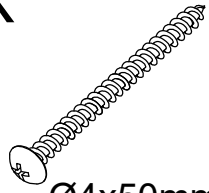 Ø4x50mm 2PCS	L 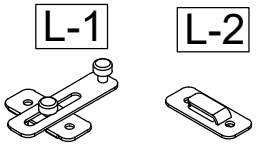 2PCS
M 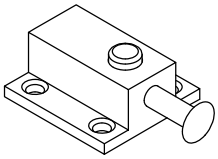 2PCS	N 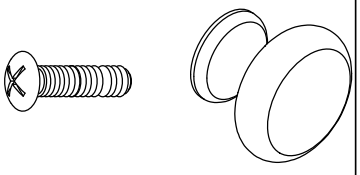 2PCS	O 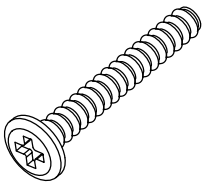 Ø6x50mm 10PCS	P 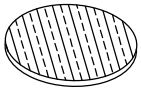 Ø20mm 6PCS
Q  2PCS	R  Ø4x14mm 2PCS	S 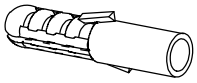 Ø6x30mm 2PCS	T 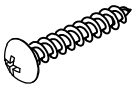 Ø4x25mm 4PCS

Parts list

U 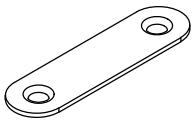 45x12x1mm 15PCS	V  Ø3.5x12mm 8PCS	CL Packing by pearl cotton, don't discard by mistake.  L350mm 2PCS	CR Packing by pearl cotton, don't discard by mistake. 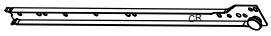 L350mm 2PCS
DL  L350mm 2PCS	DR 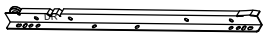 L350mm 2PCS		
① 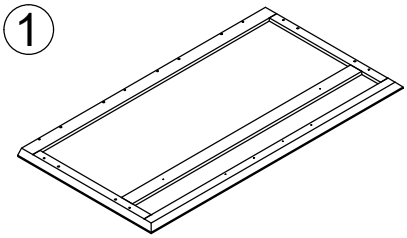 1PC	② 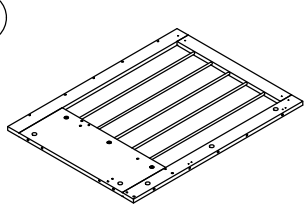 1PC	③ 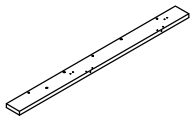 1PC	
④ 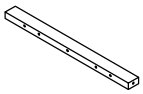 2PCS	⑤ 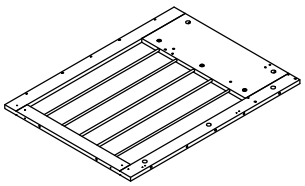 1PC	⑥ 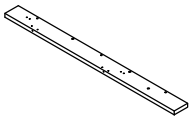 1PC	
⑦ 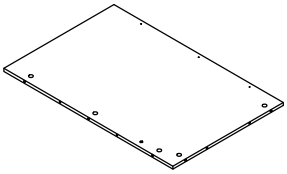 1PC	⑧ 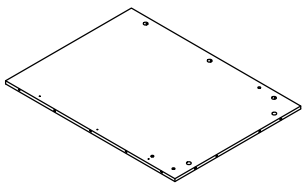 1PC	⑨ 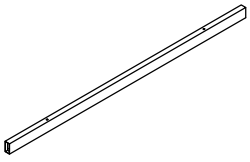 1PC	

Parts list

⑩ 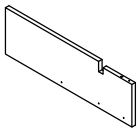 1PC	⑪ 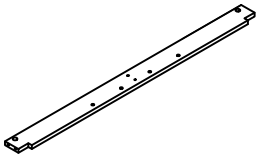 1PC	⑫ 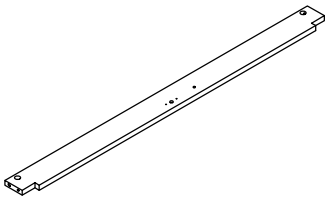 1PC
⑬ 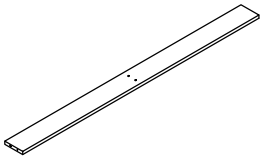 1PC	⑭ 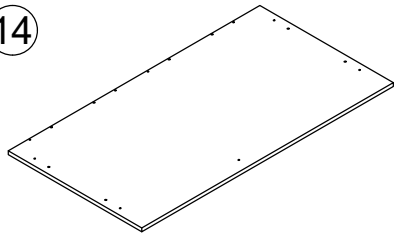 1PC	⑮ 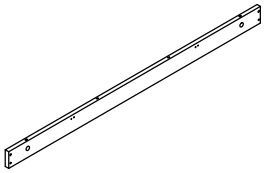 1PC
⑯ 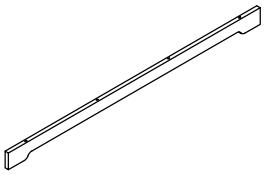 1PC	⑰ 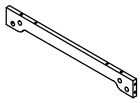 2PCS	⑱ 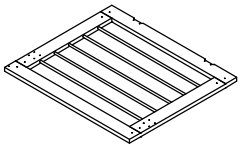 1PC
⑲ 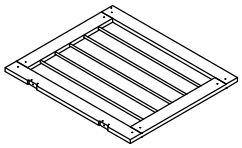 1PC	⑳ 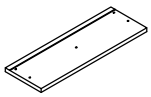 2PCS	㉑ 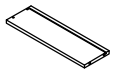 2PCS
㉒ 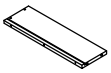 2PCS	㉓ 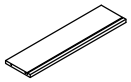 2PCS	㉔ 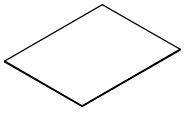 2PCS

Parts list

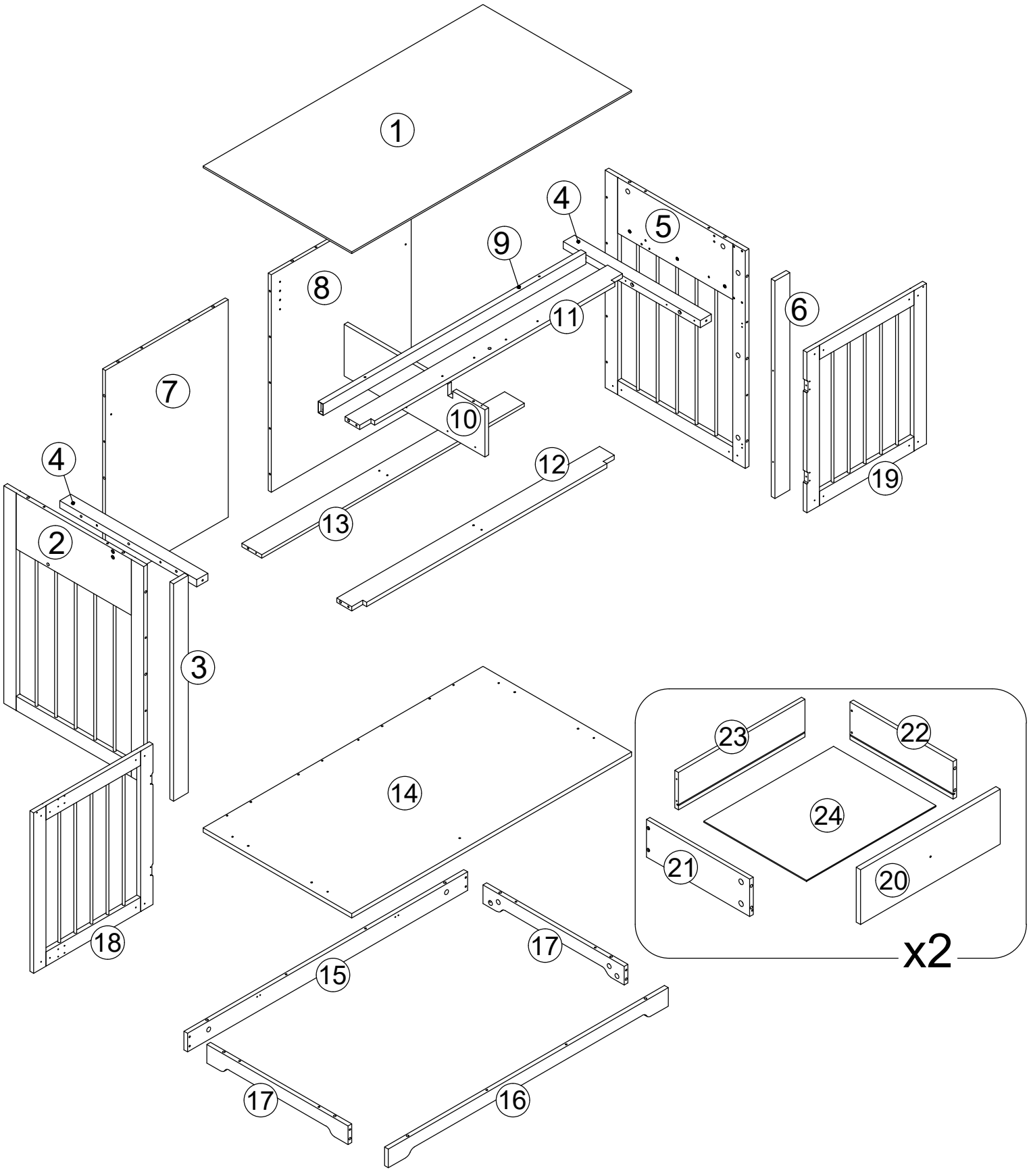

Installation steps

1.

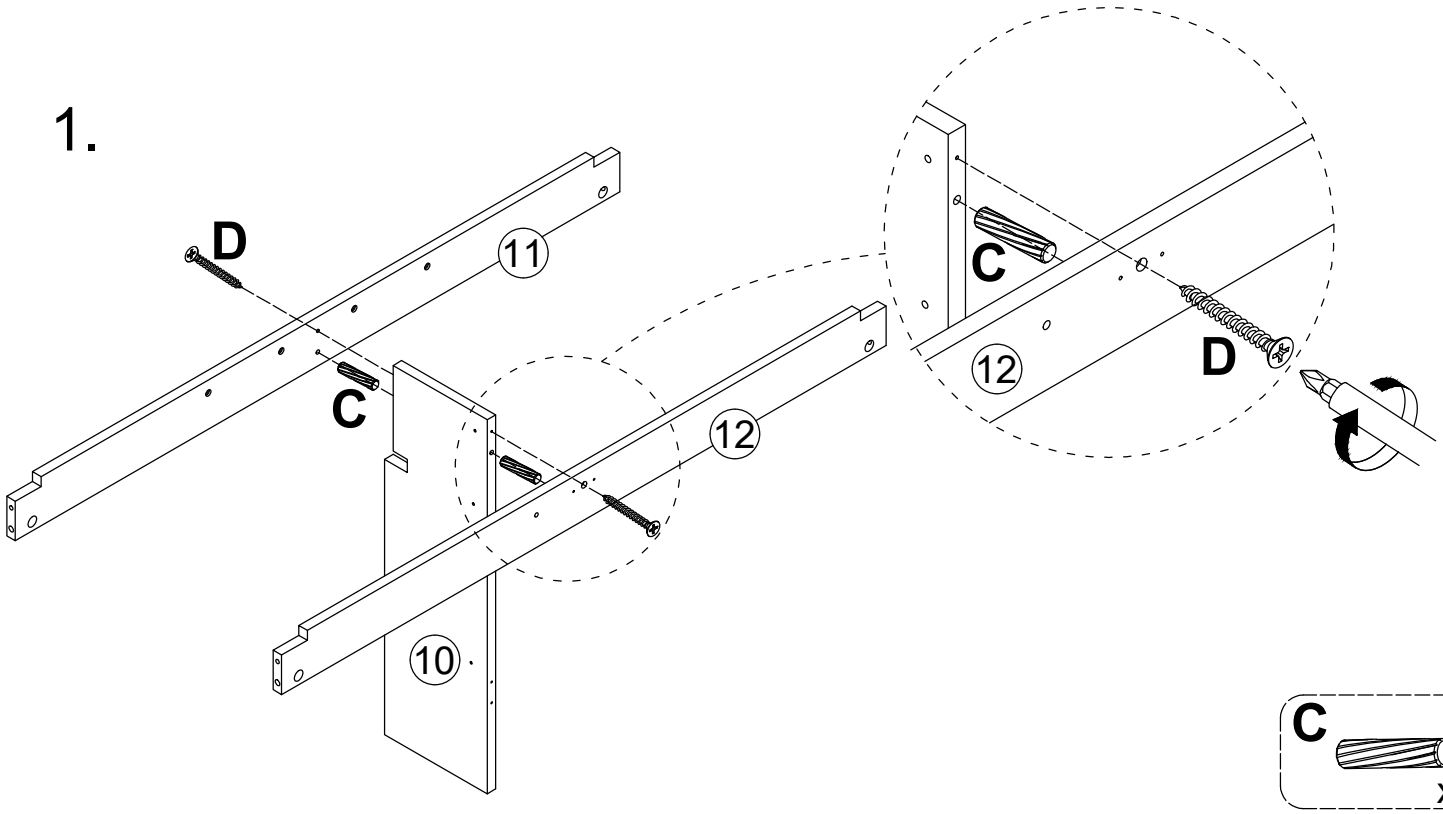

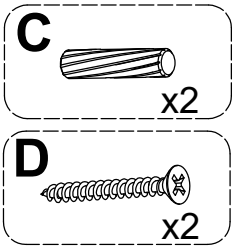

2.

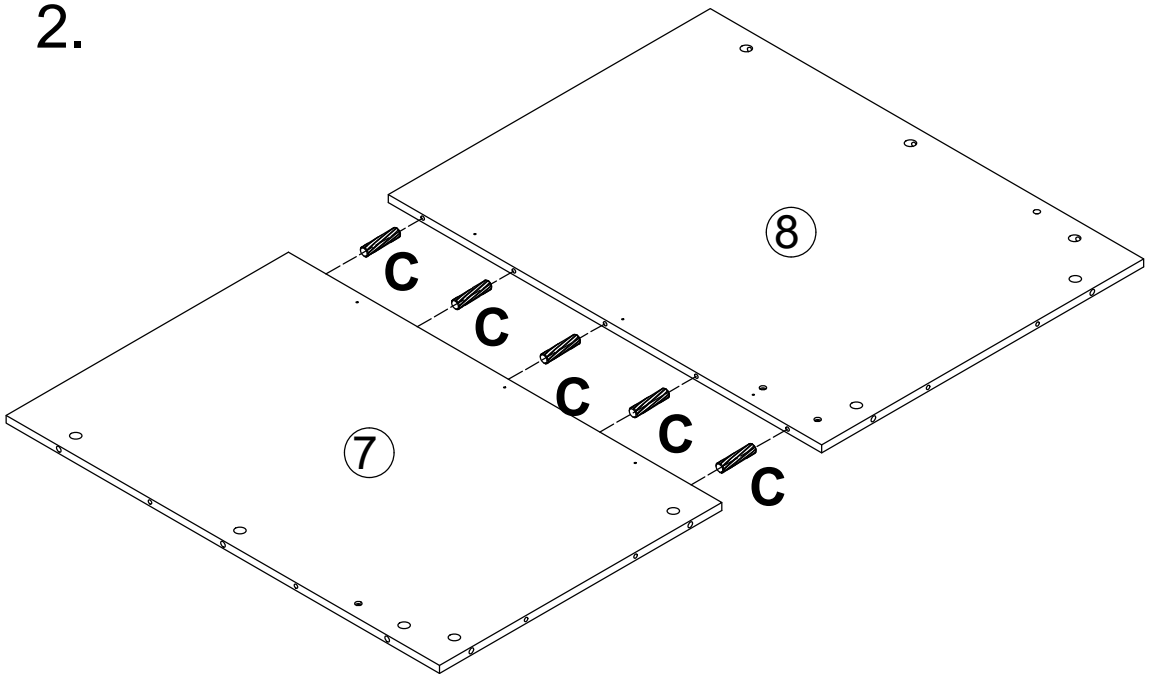

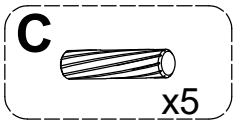

Installation steps

3.

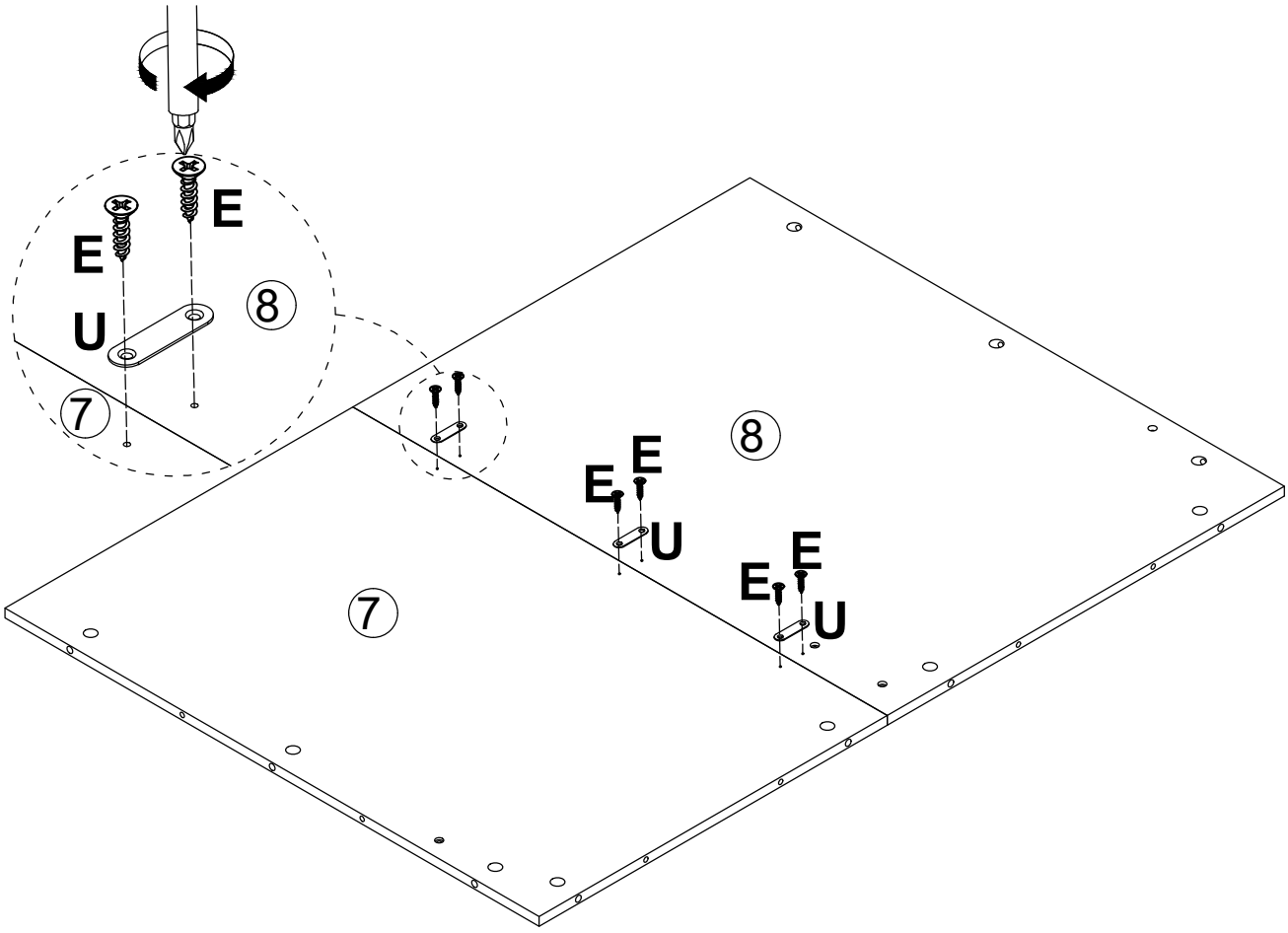

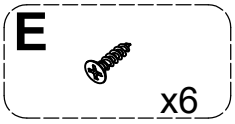

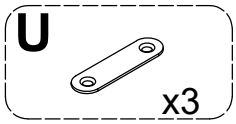

Installation steps

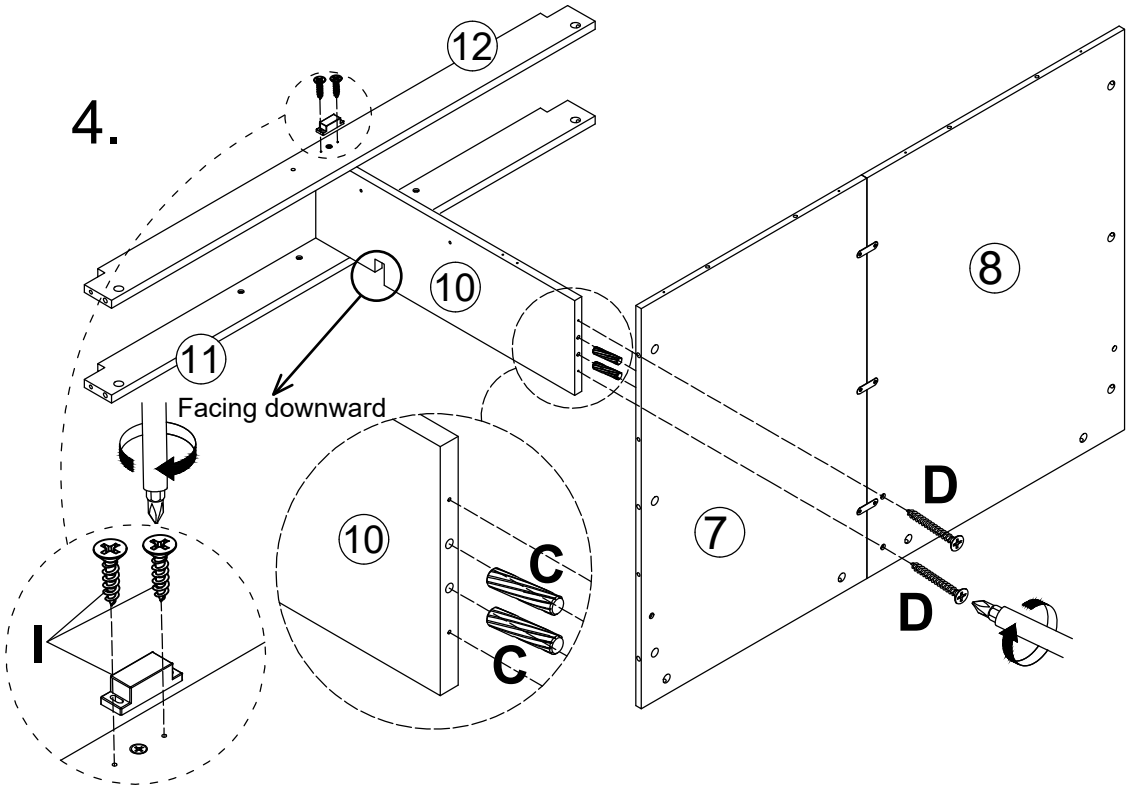

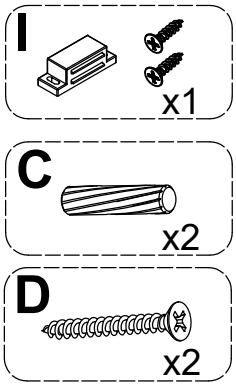

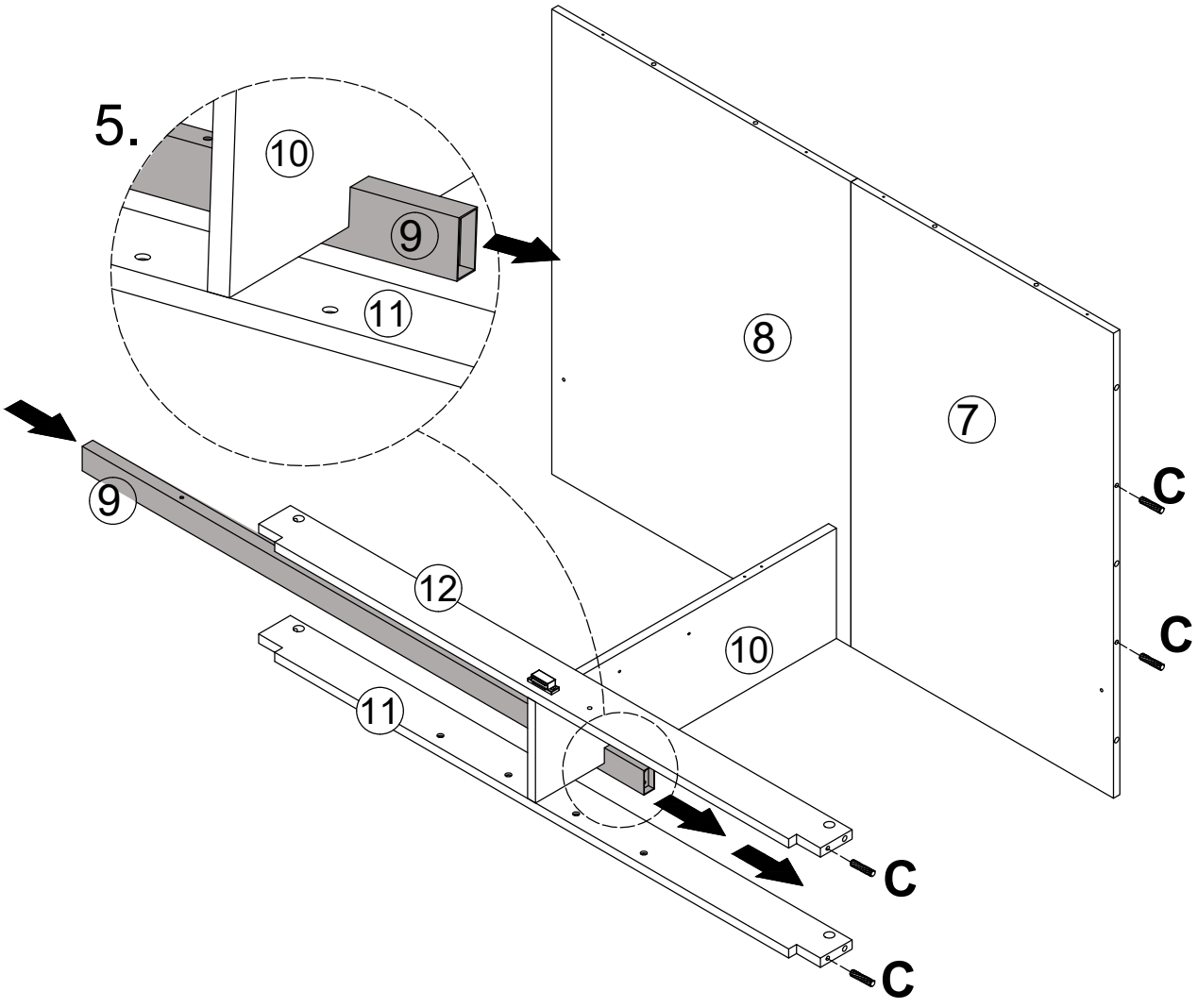

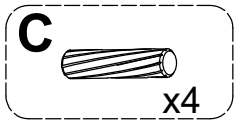

Installation steps

6.

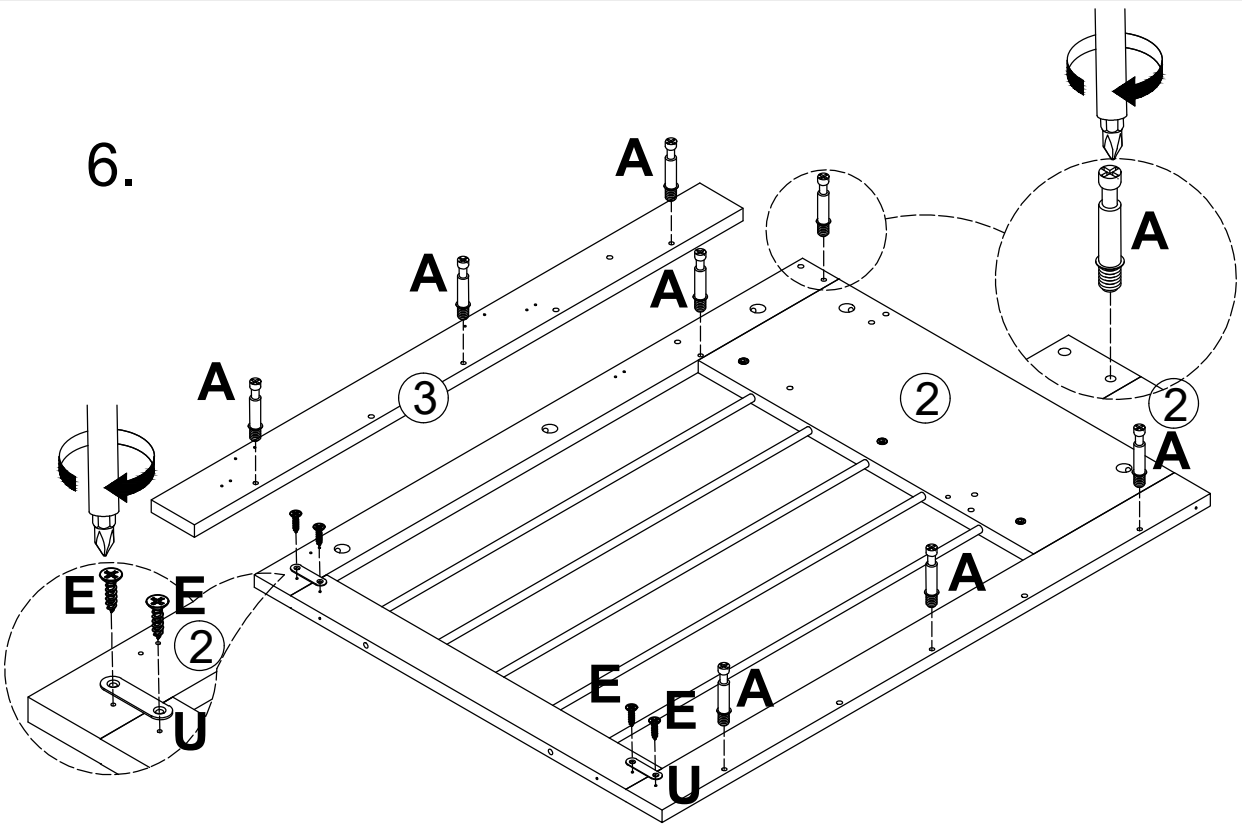

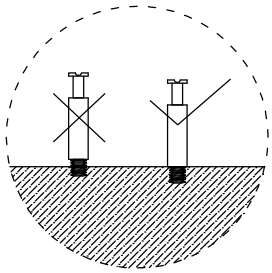

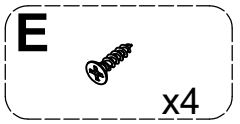

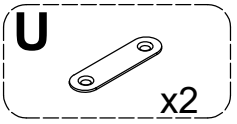

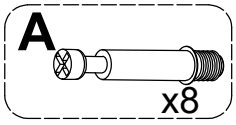

7.

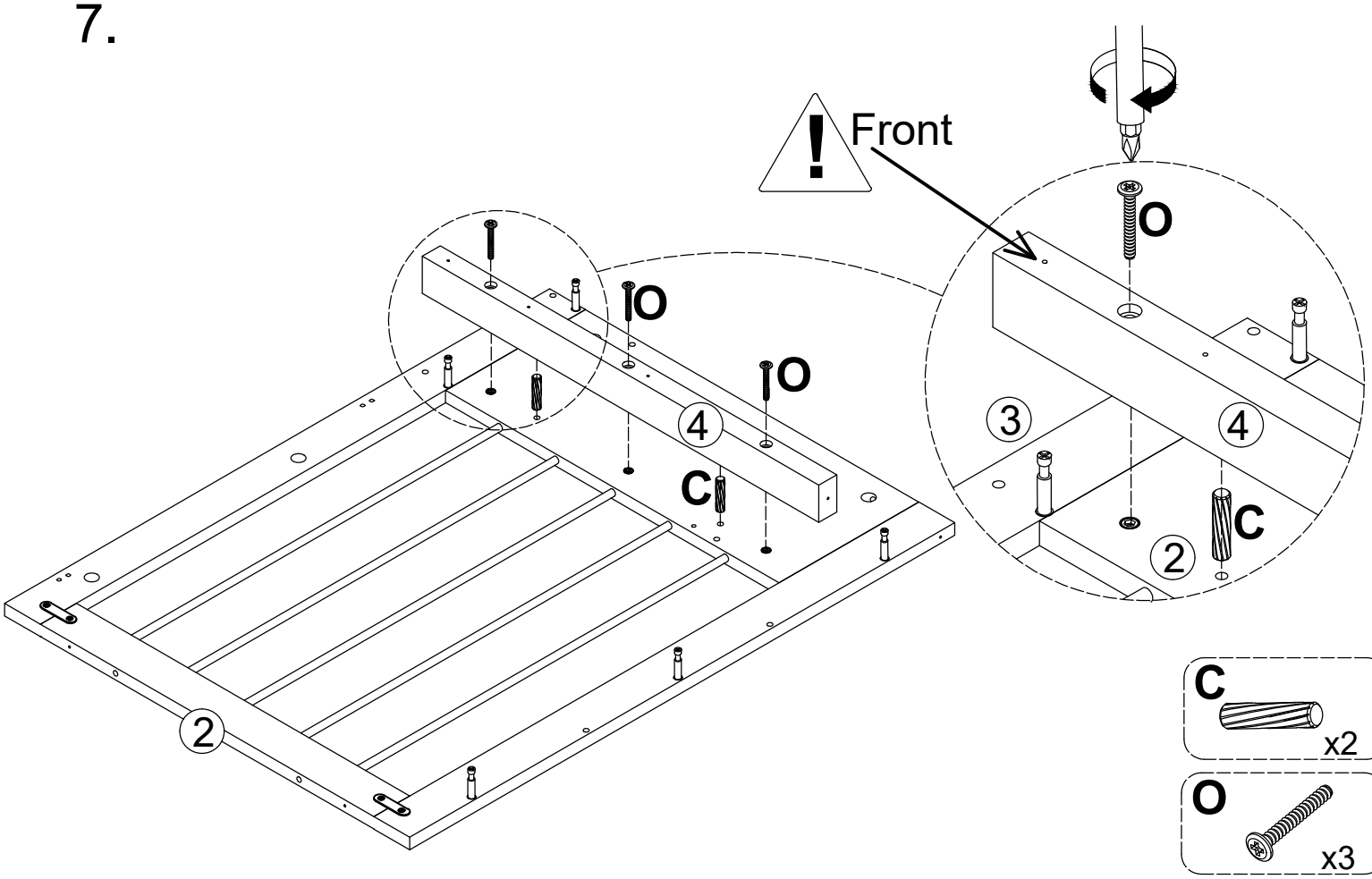

Installation steps

8.

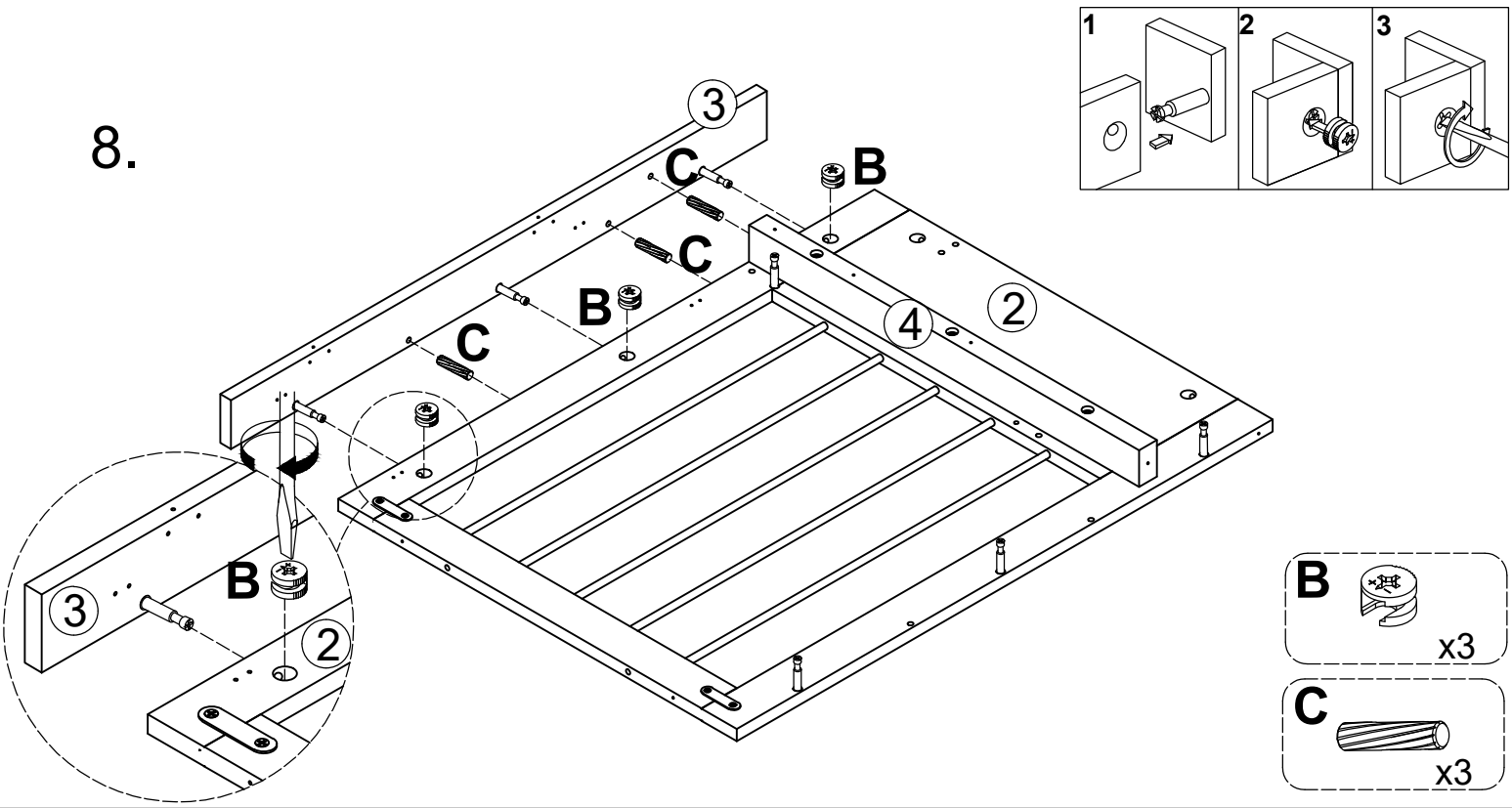

B x3

C x3

9.

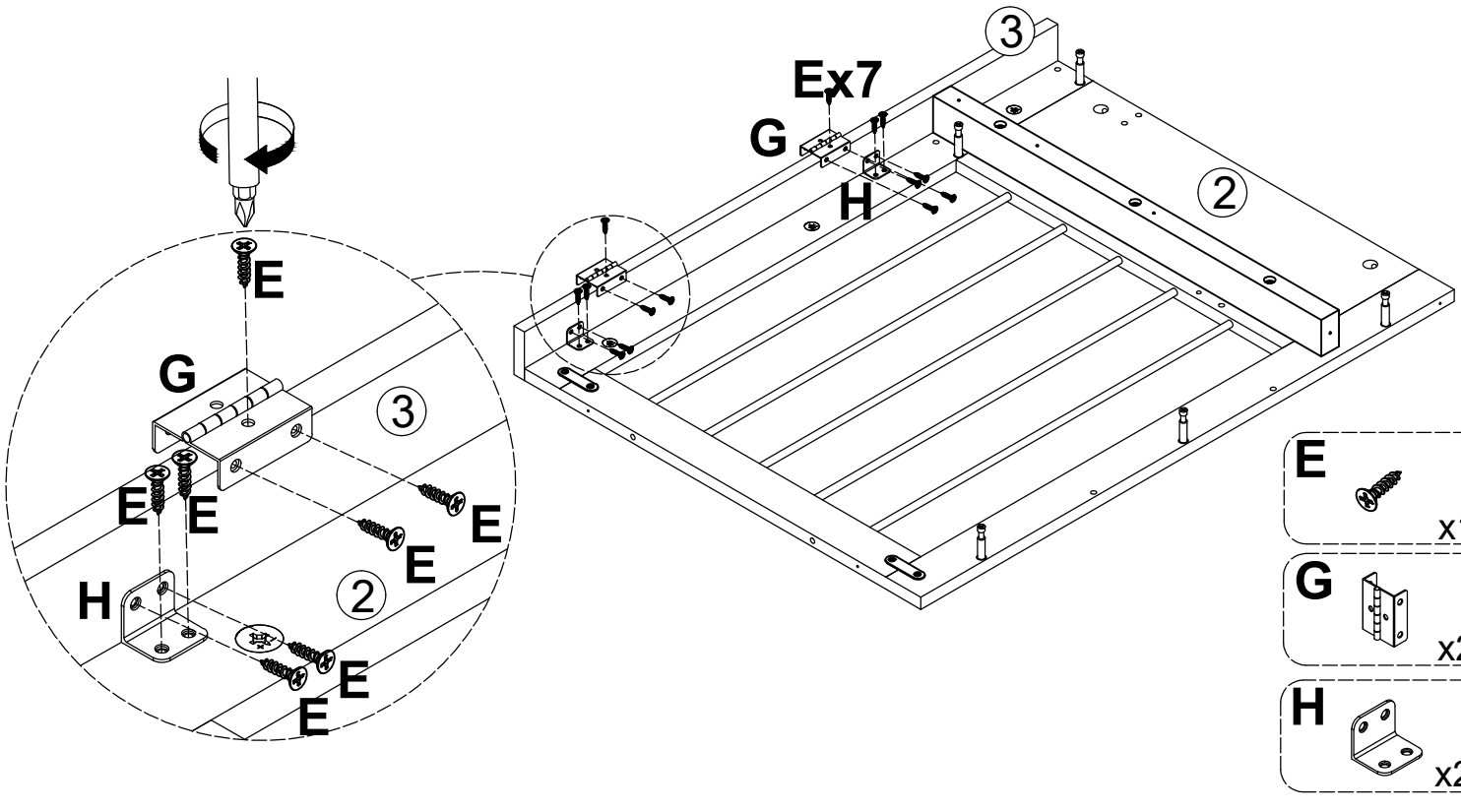

E x14

G x2

H x2

Installation steps

10.

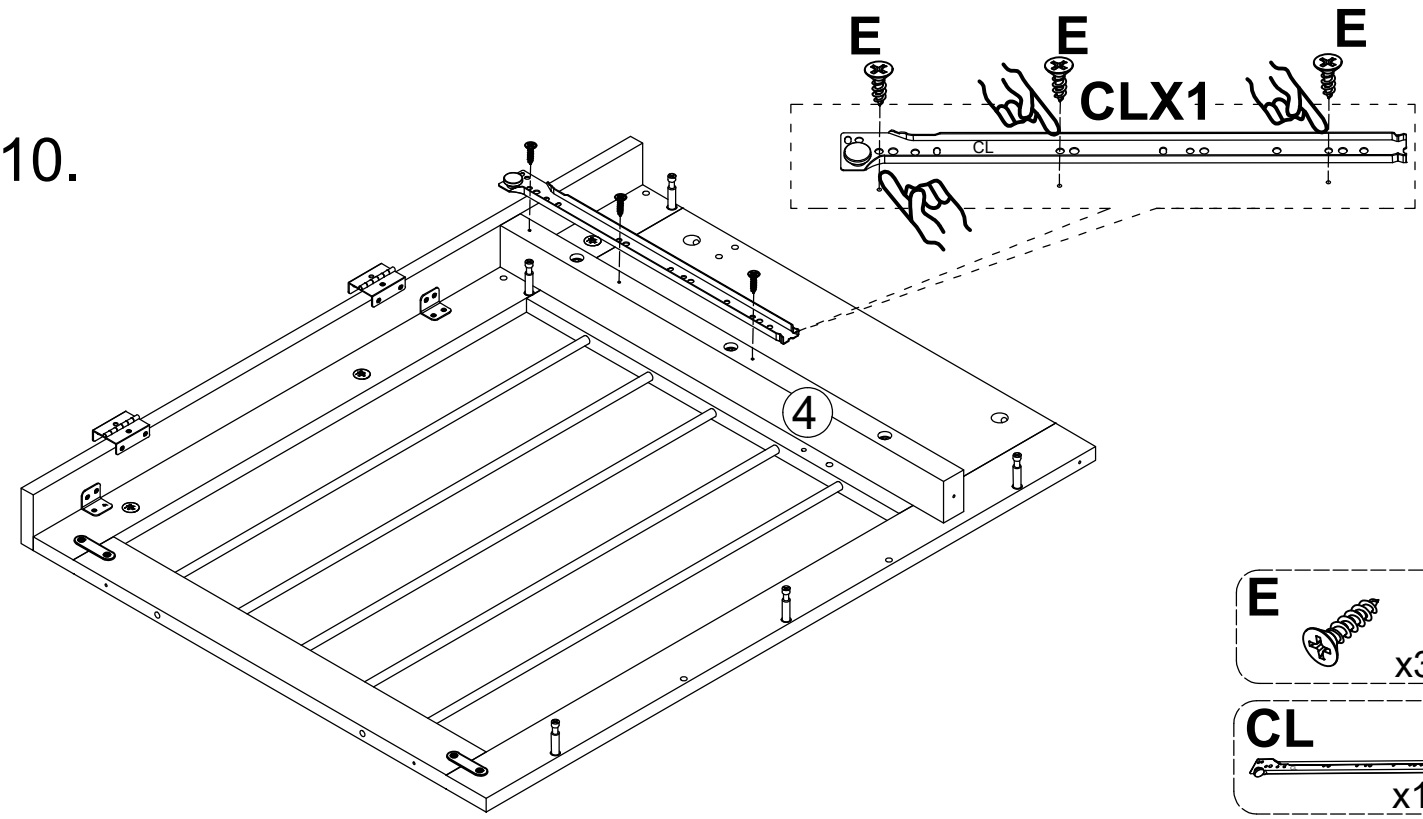

11.

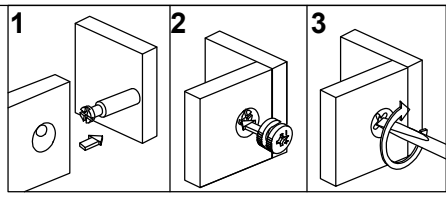

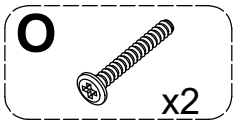

Installation steps

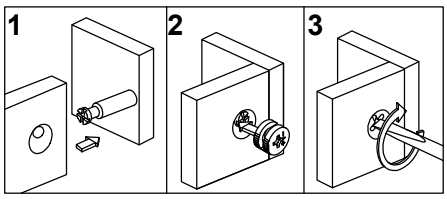

12.

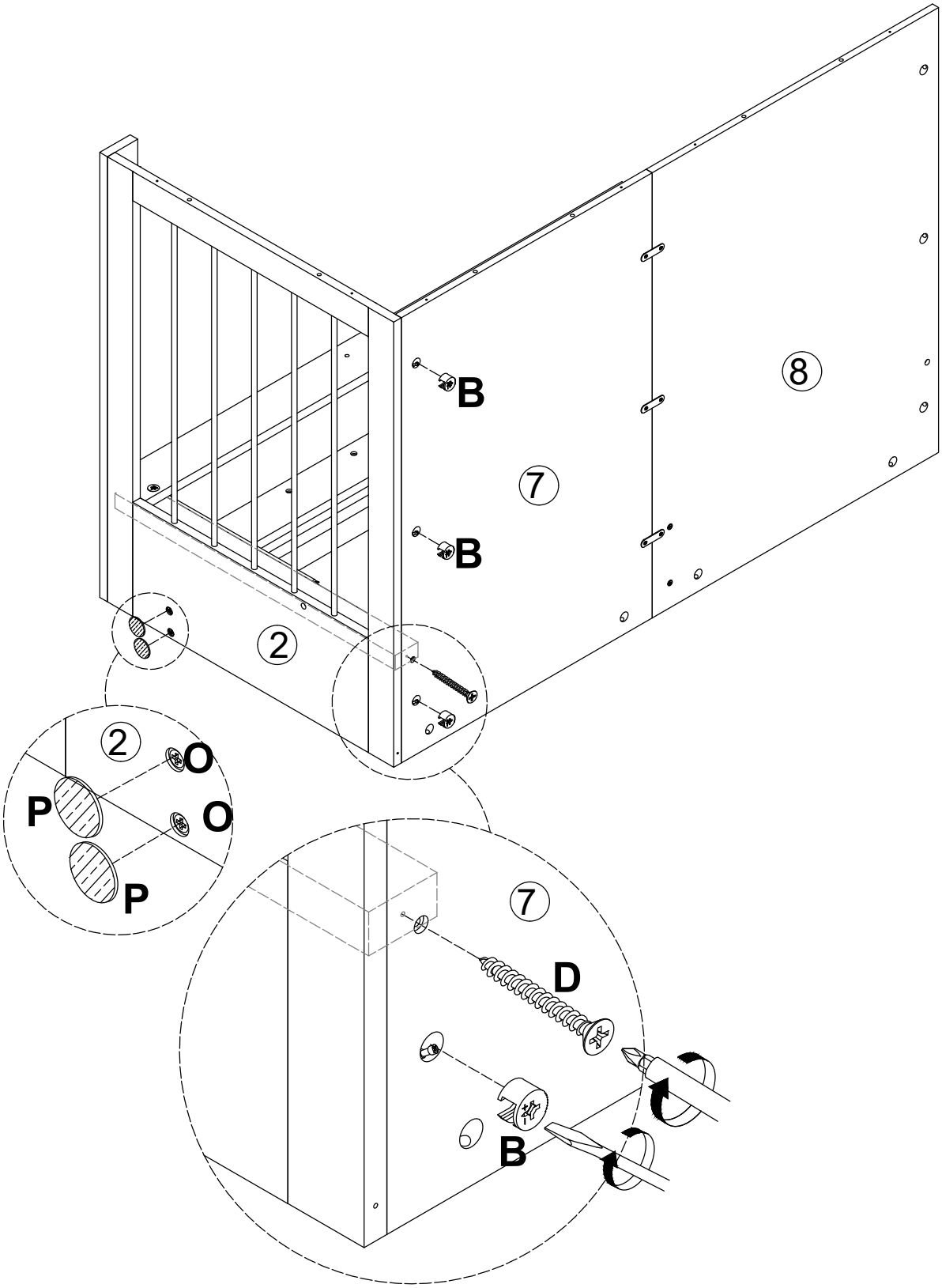

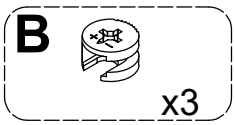

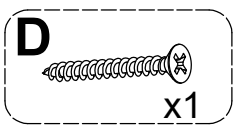

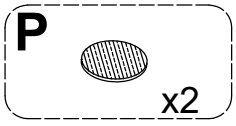

Installation steps

13.

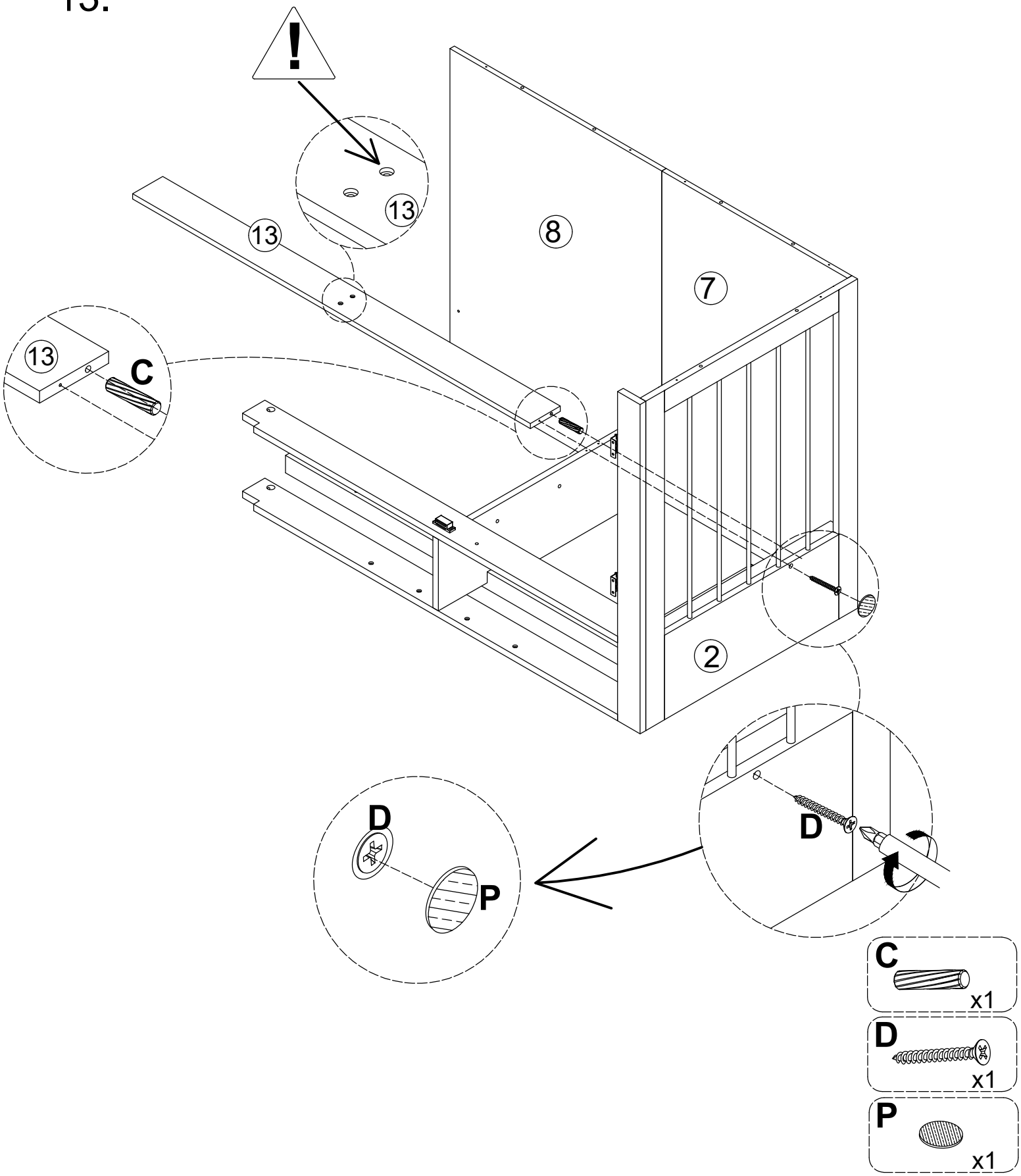

Installation steps

14.

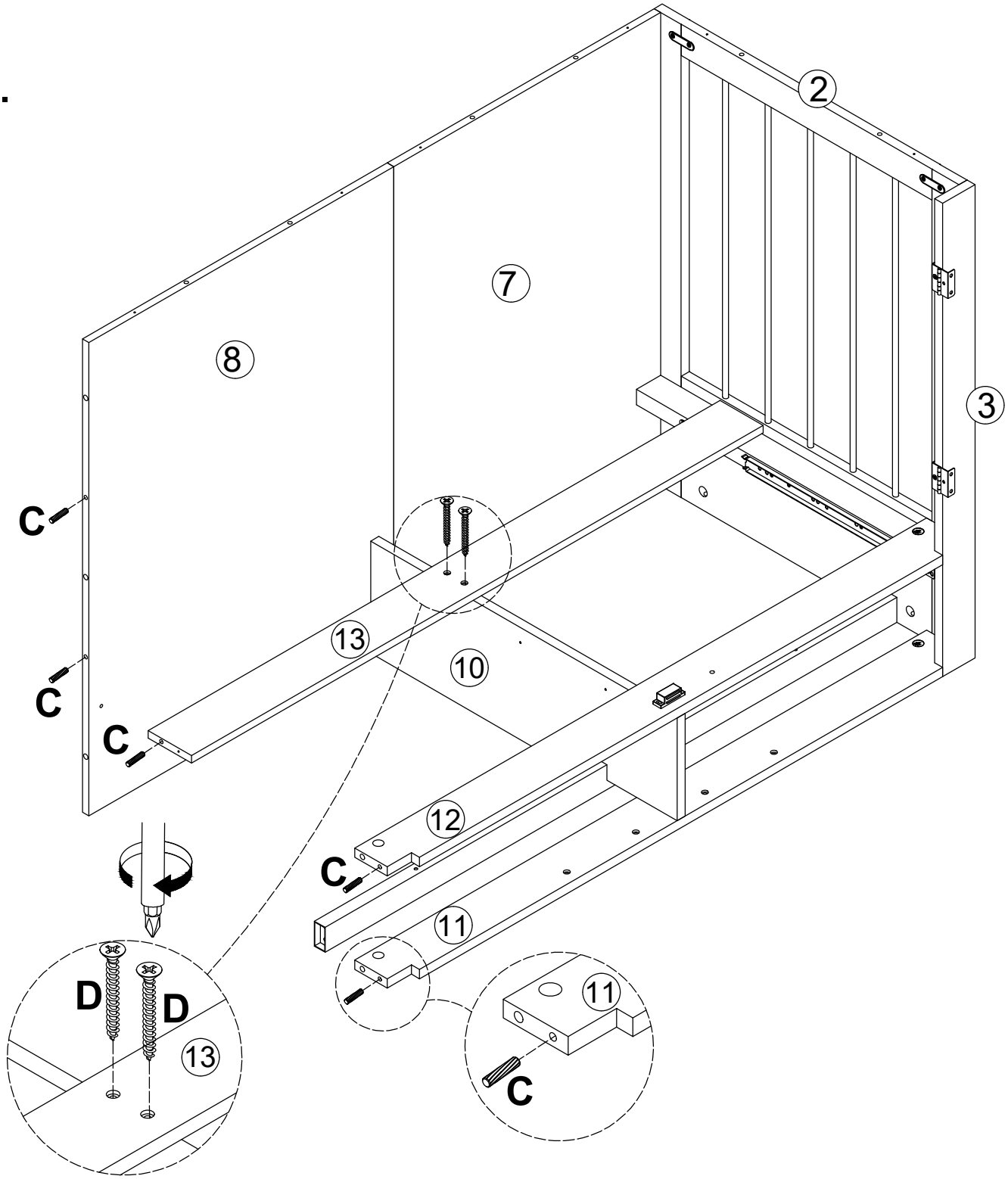

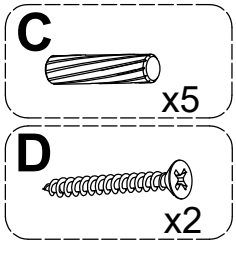

Installation steps

15.

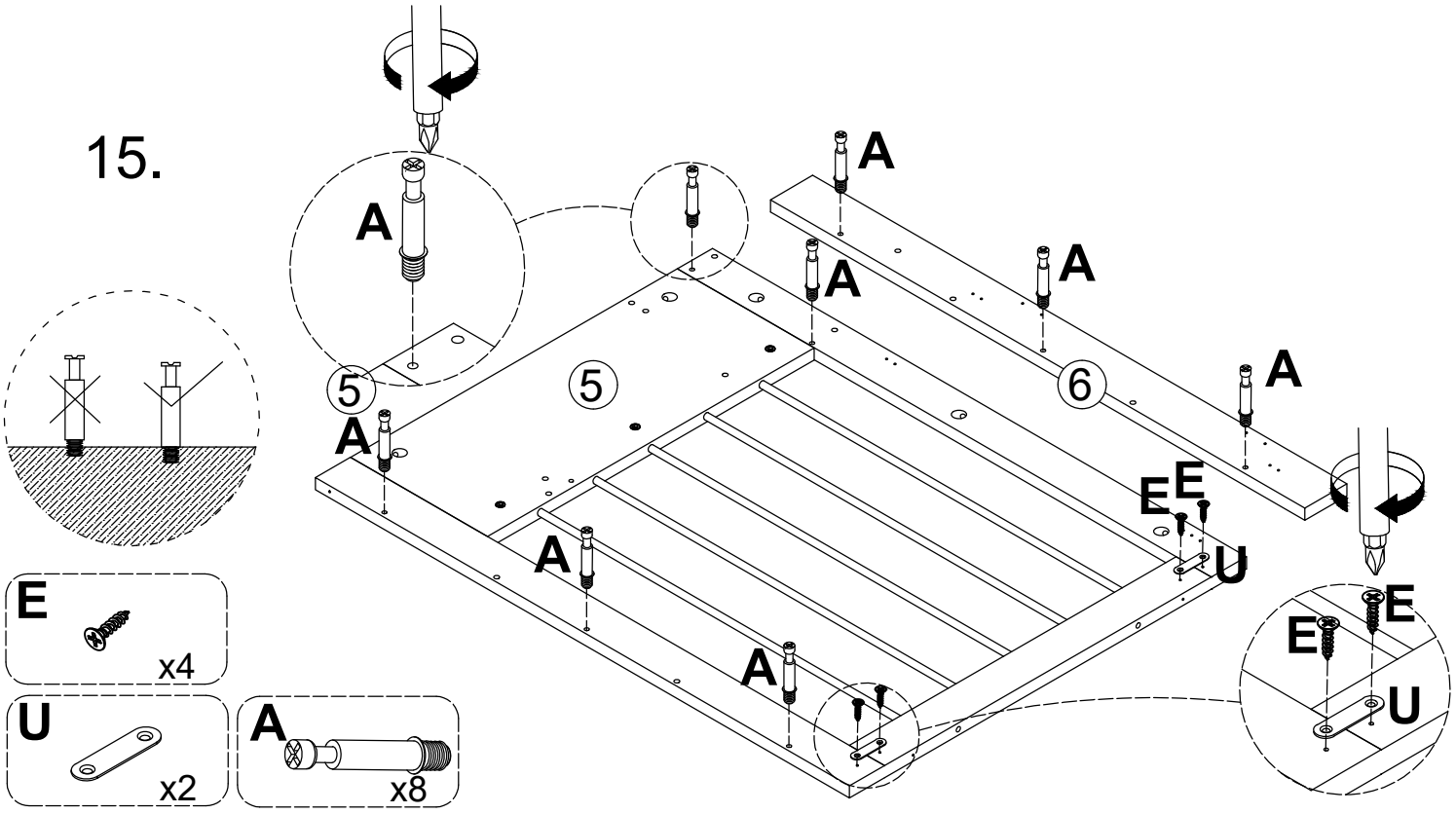

16.

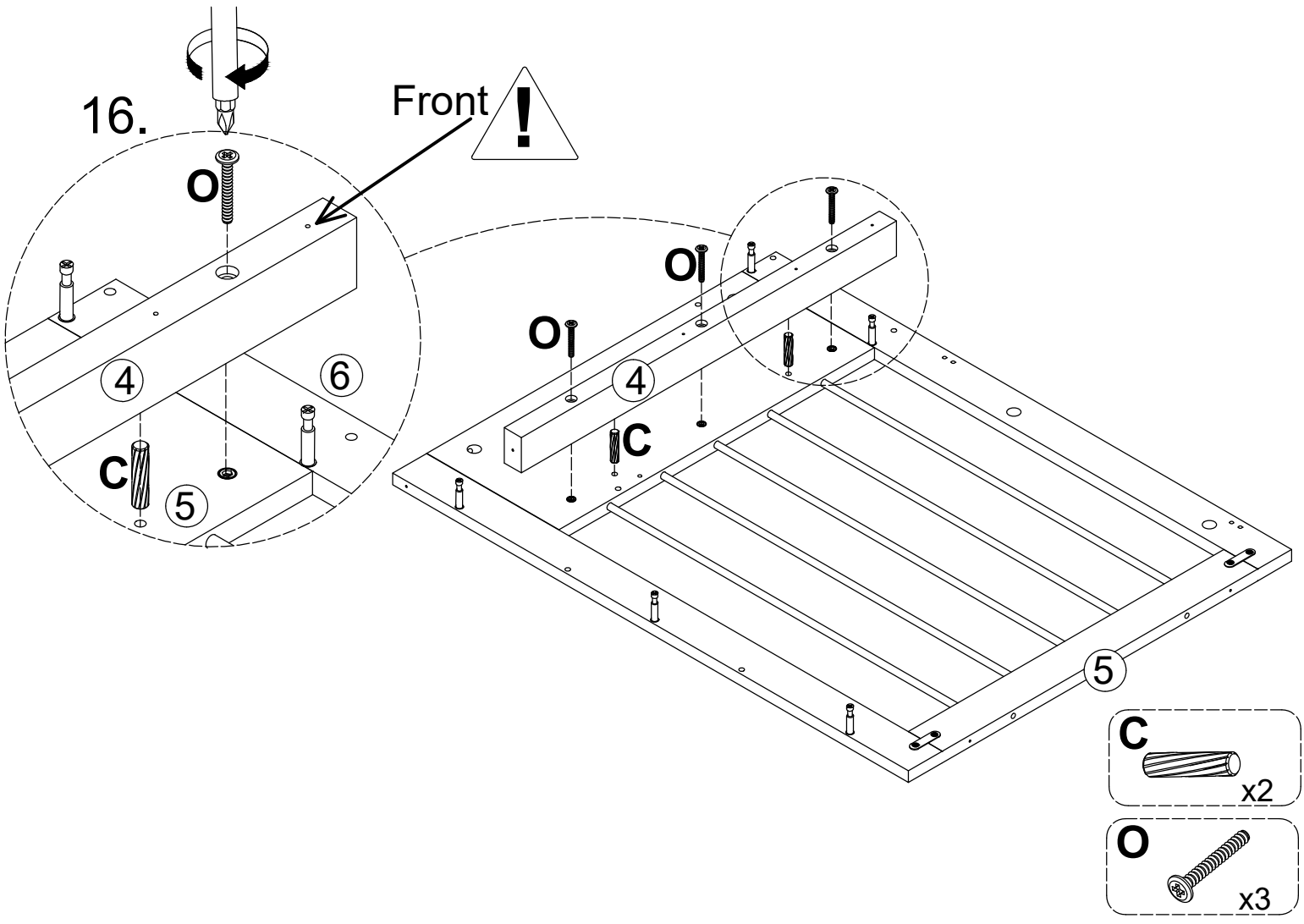

Installation steps

17.

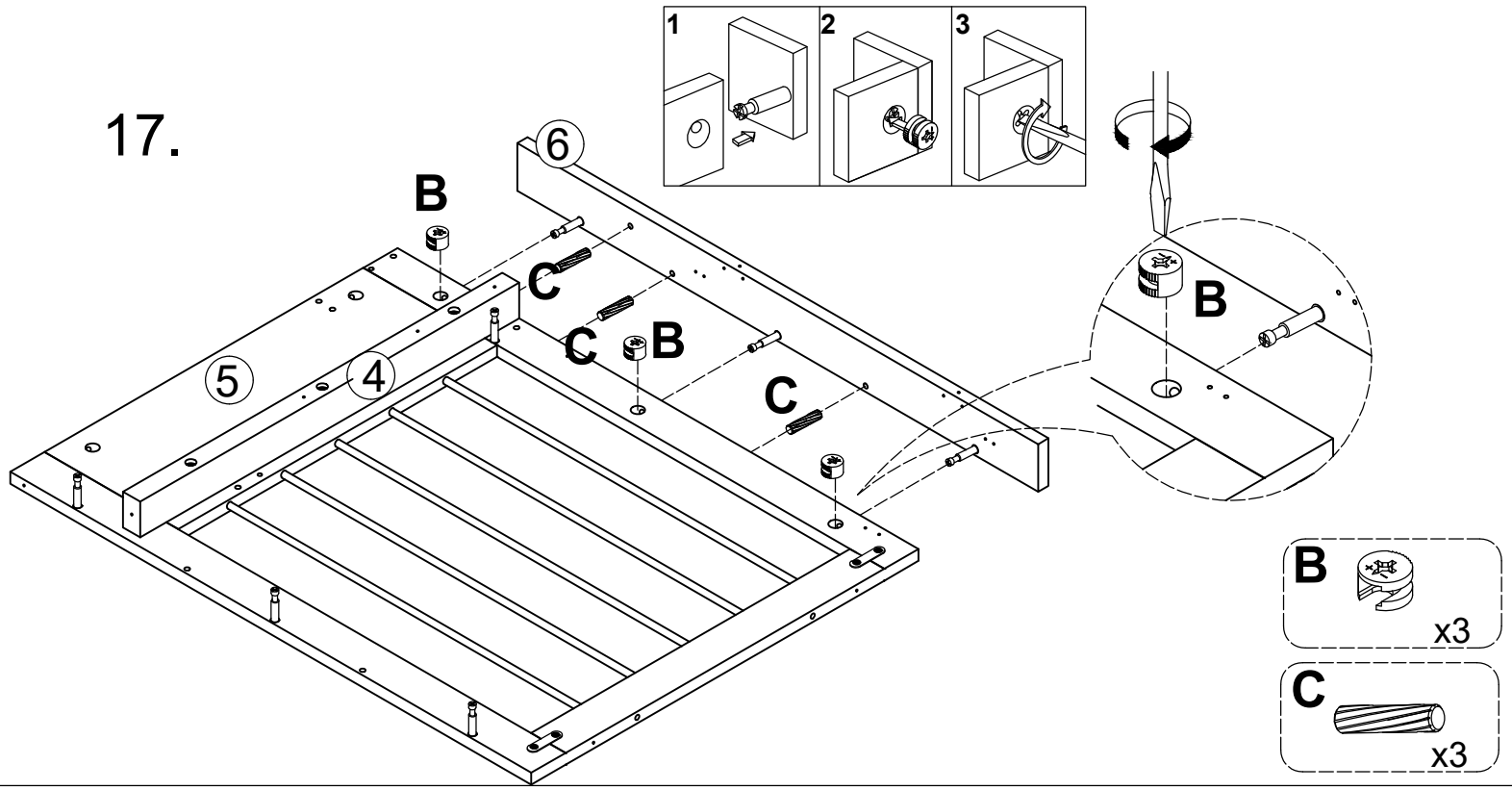

18.

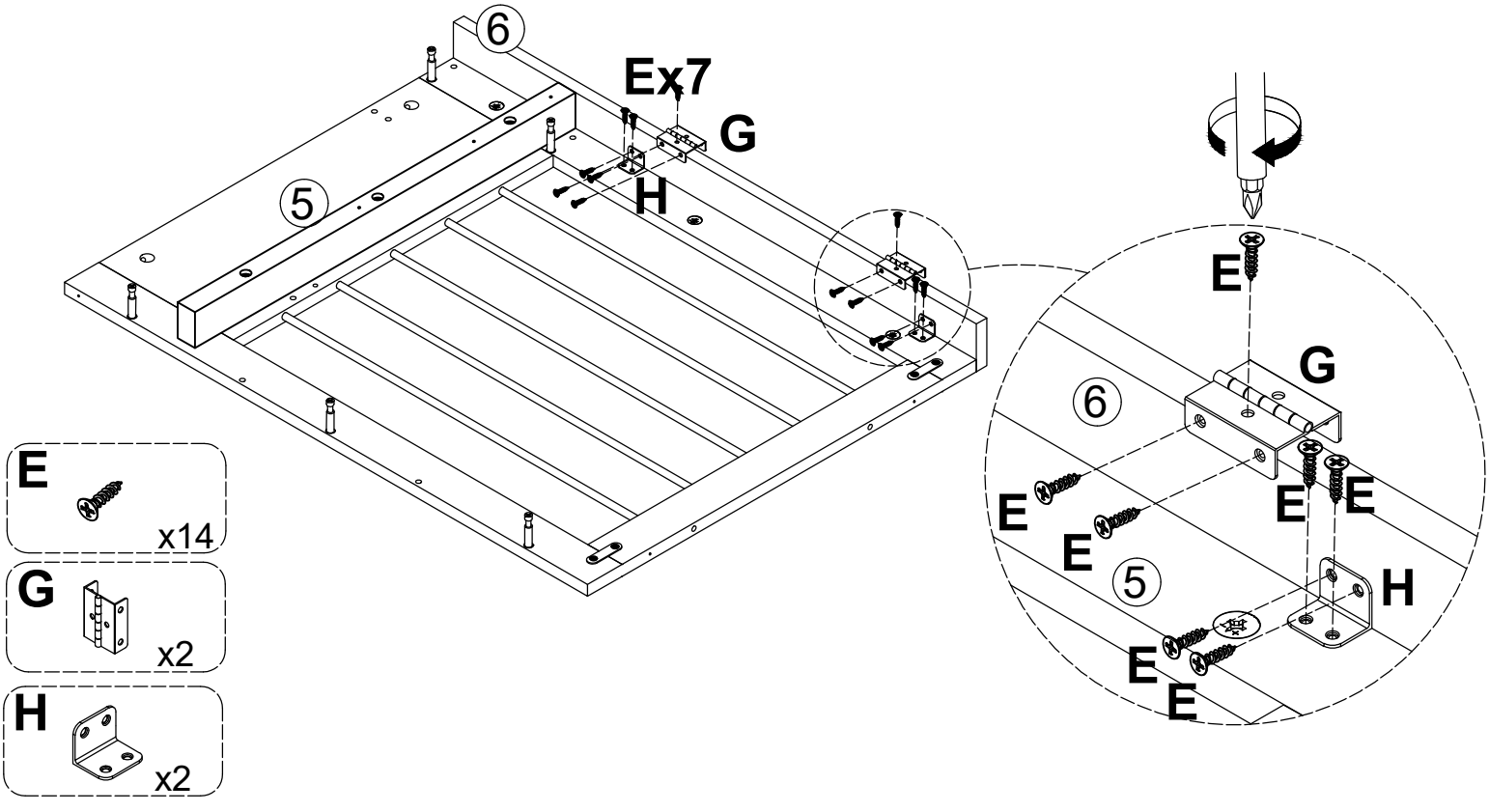

Installation steps

19.

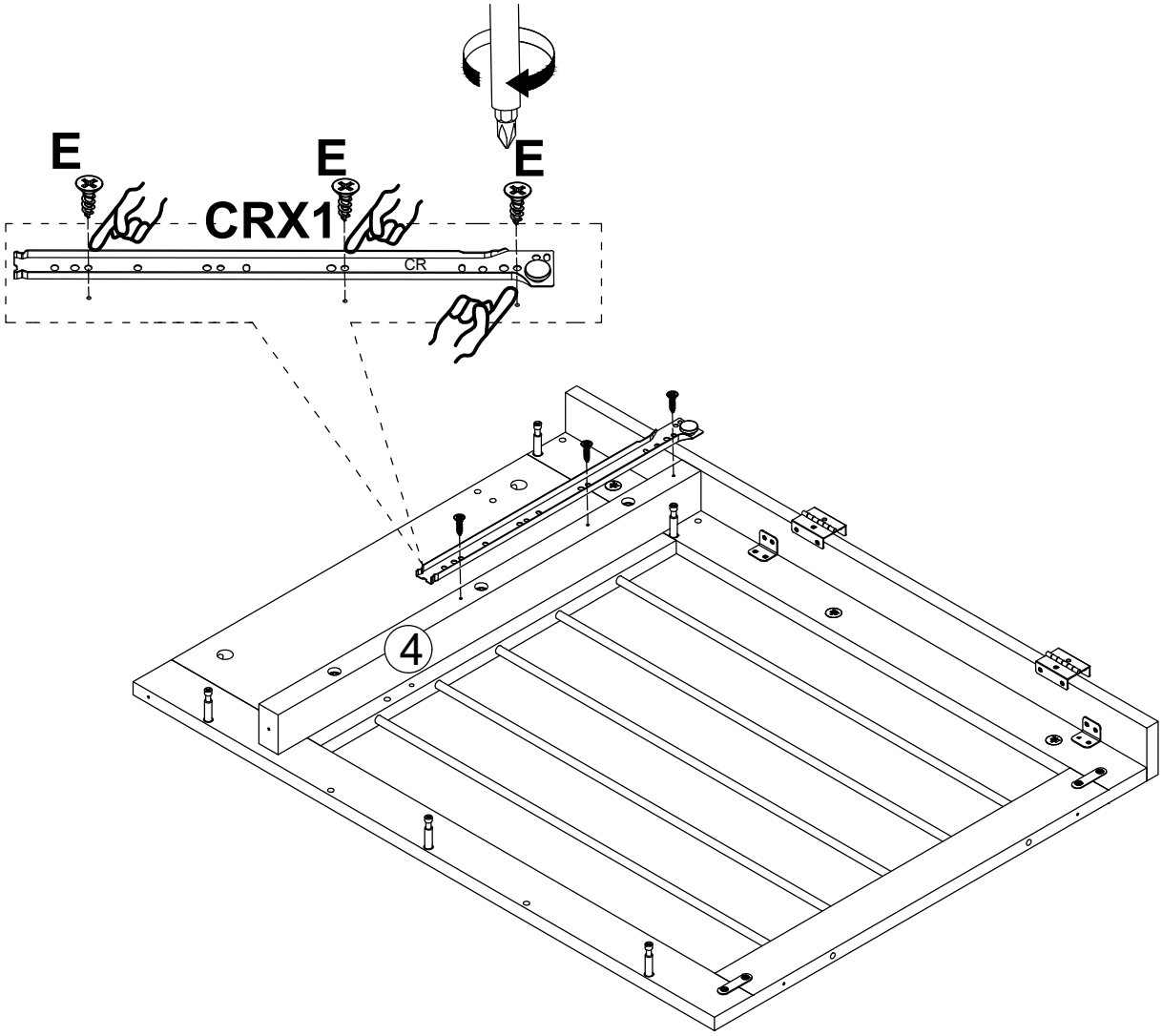

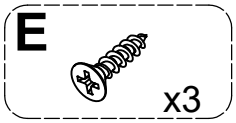

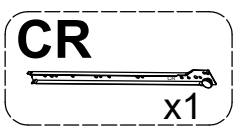

Installation steps

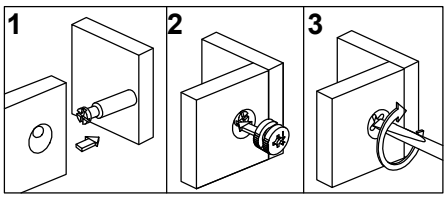

20.

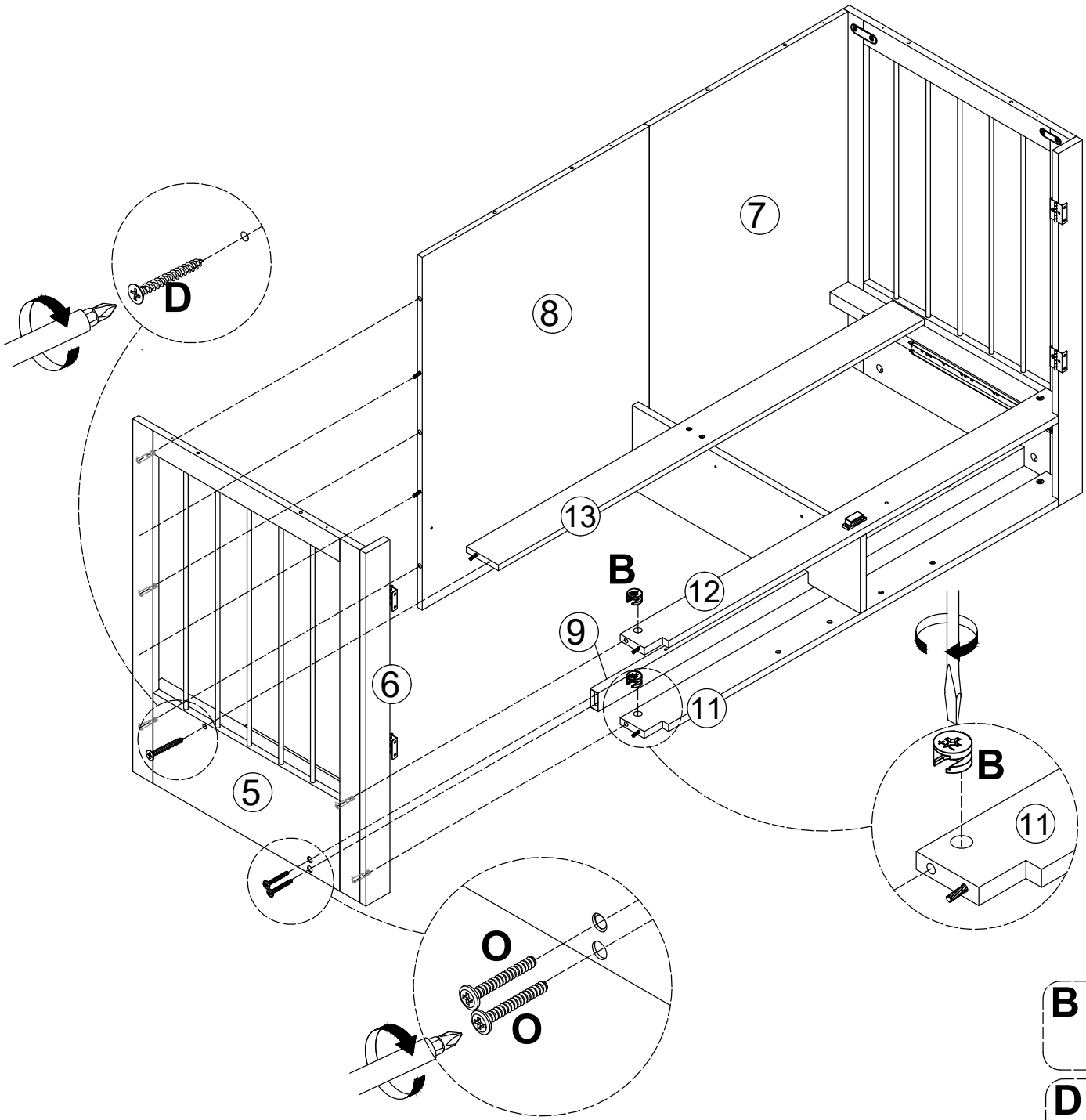

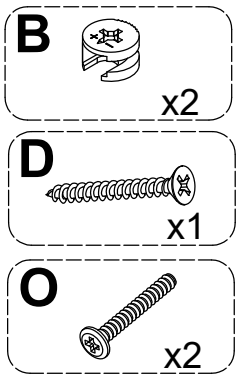

Installation steps

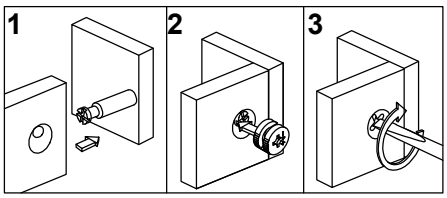

21.

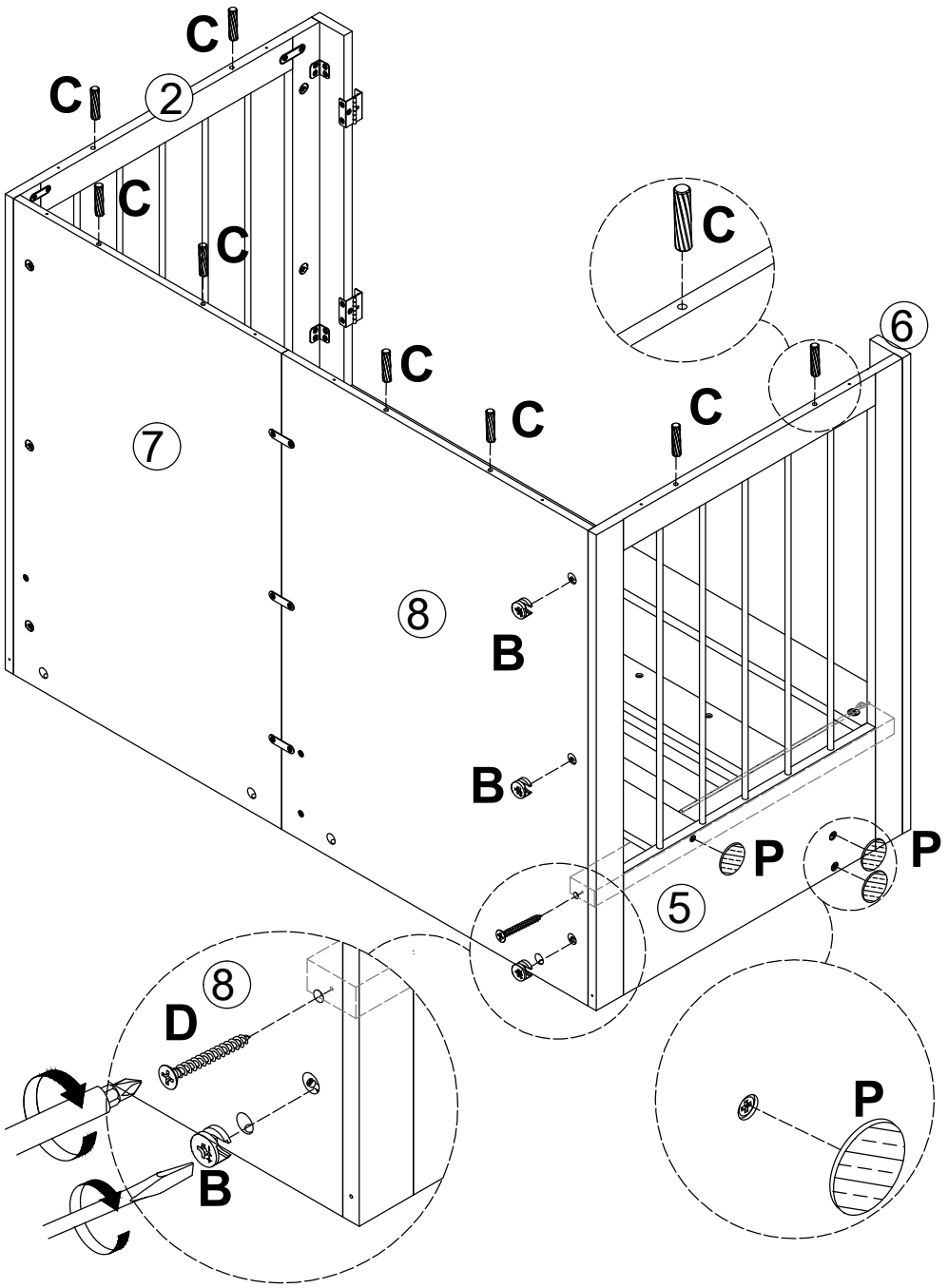

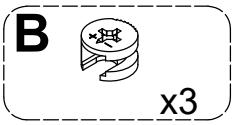

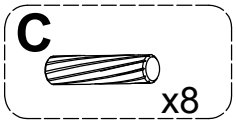

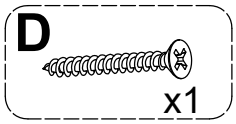

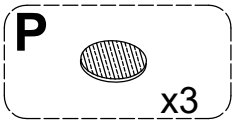

Installation steps

22.

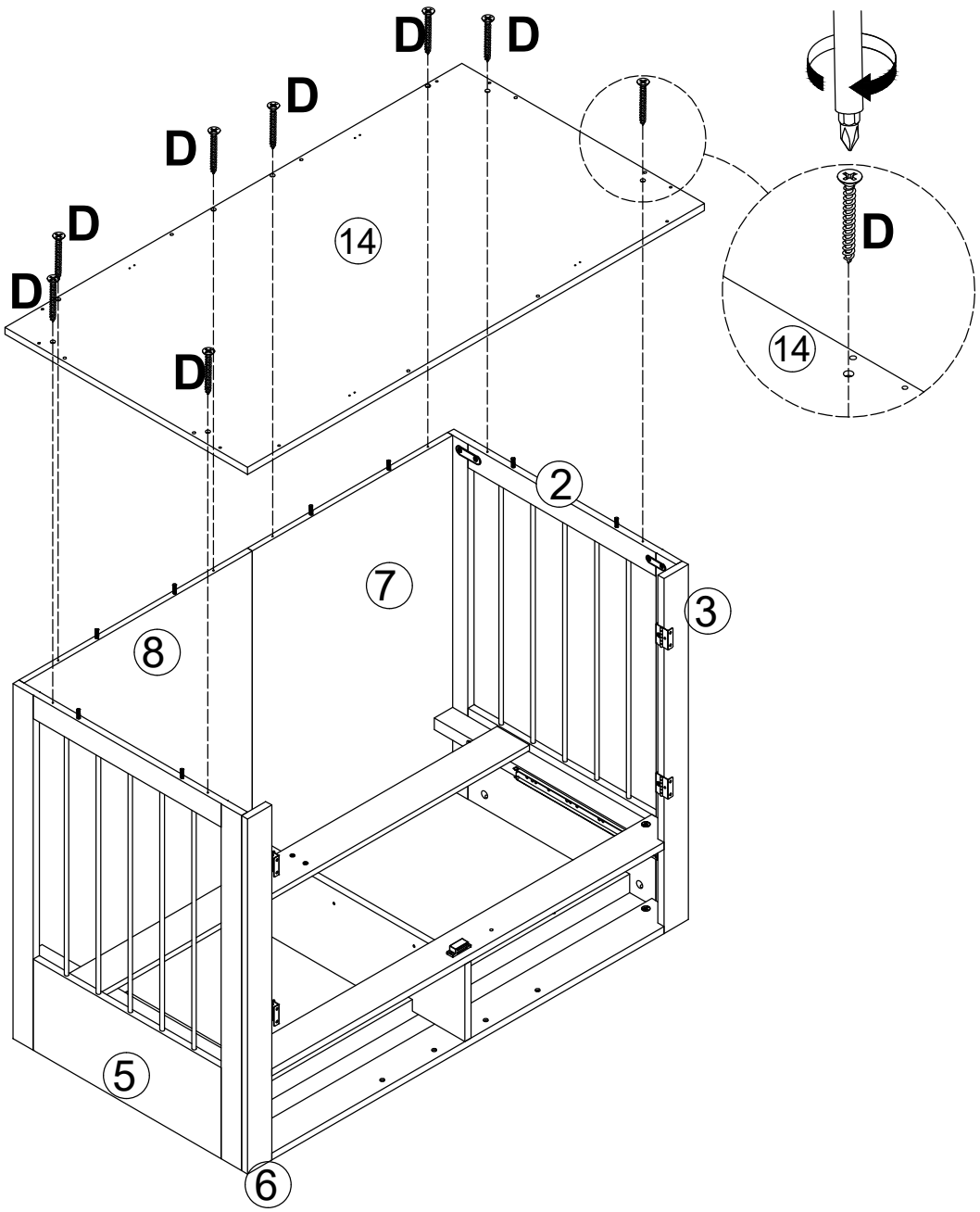

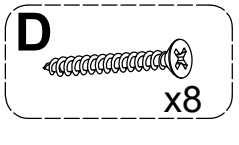

Installation steps

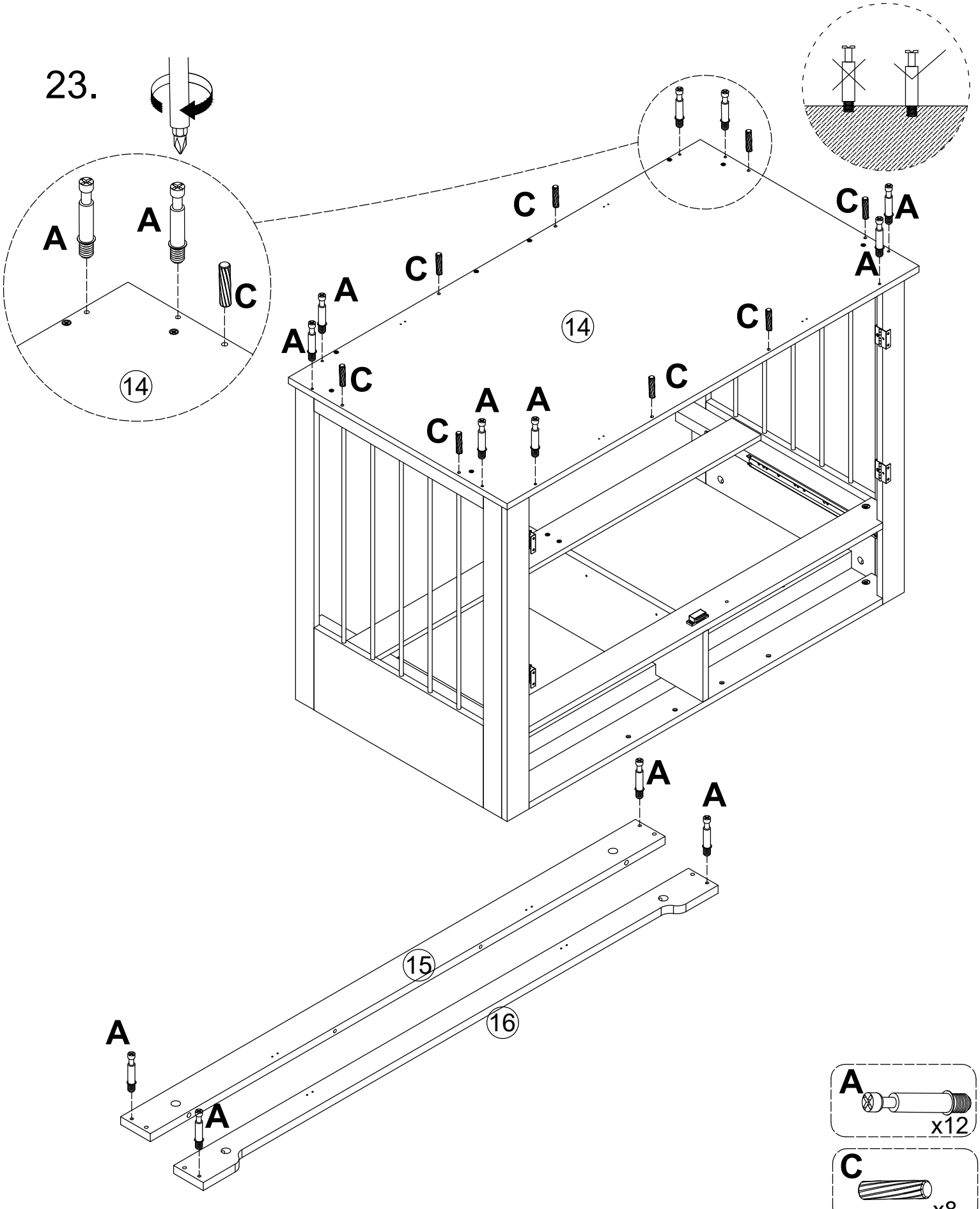

Installation steps

24.

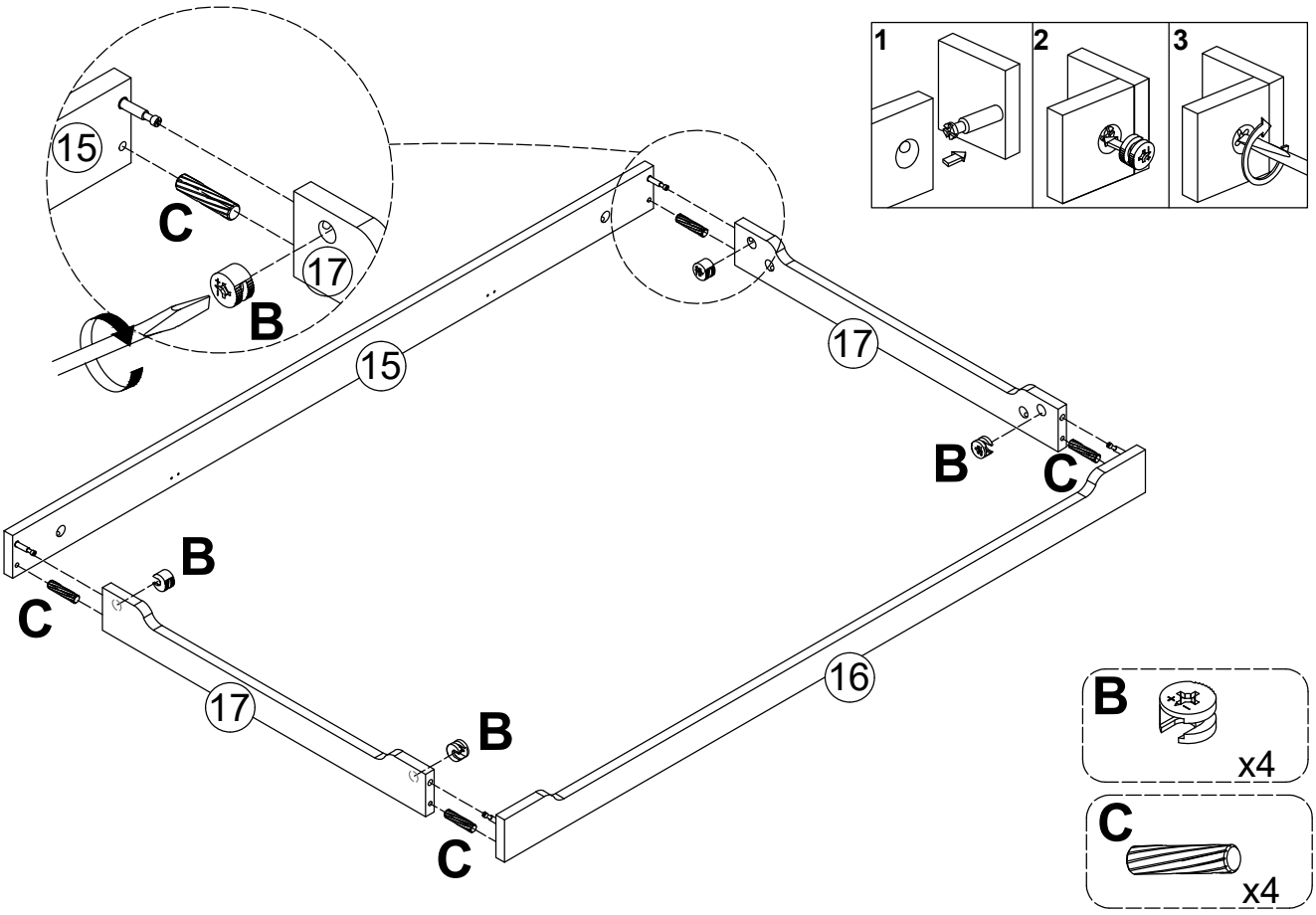

25.

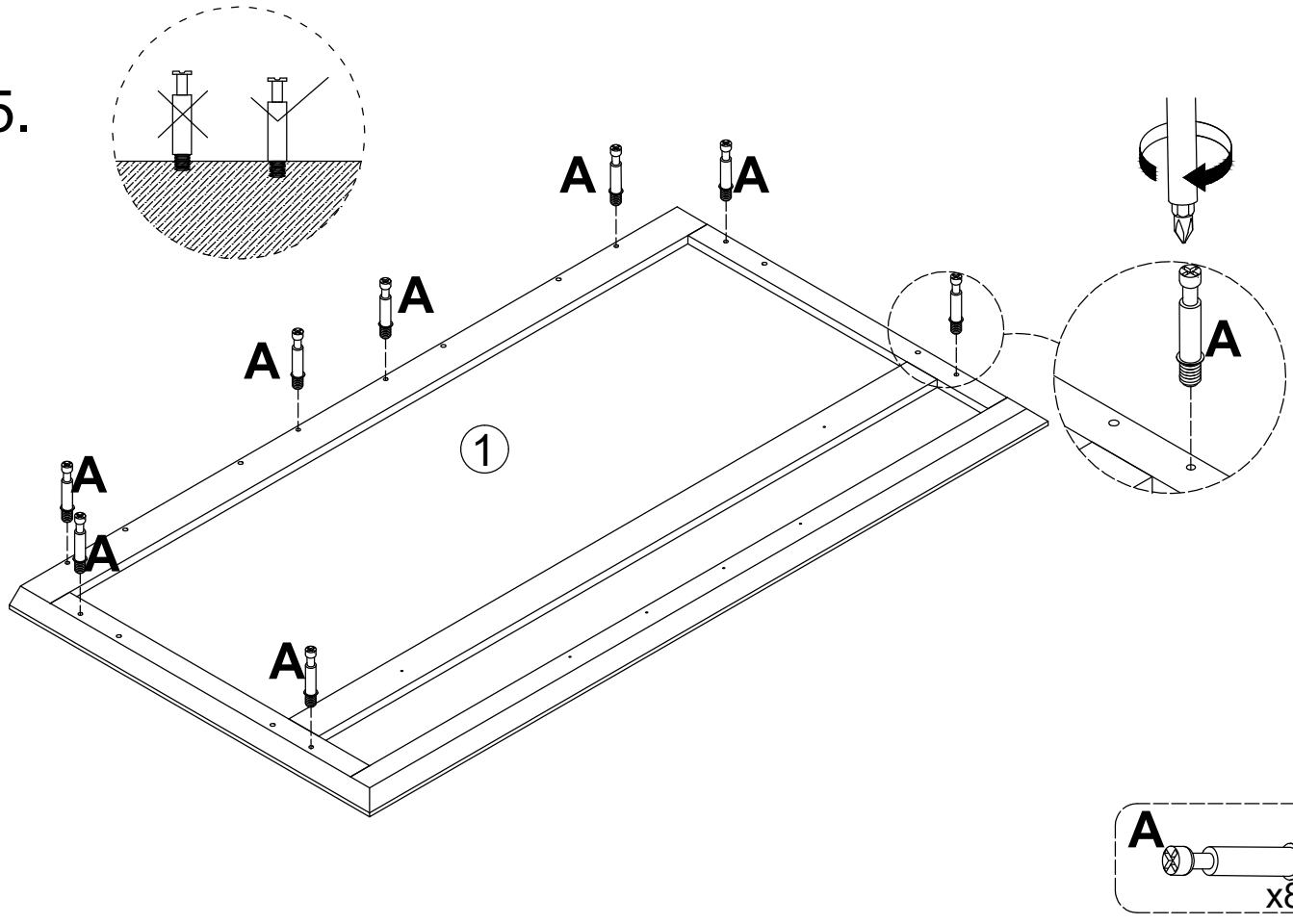

Installation steps

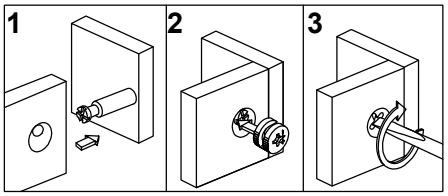

26.

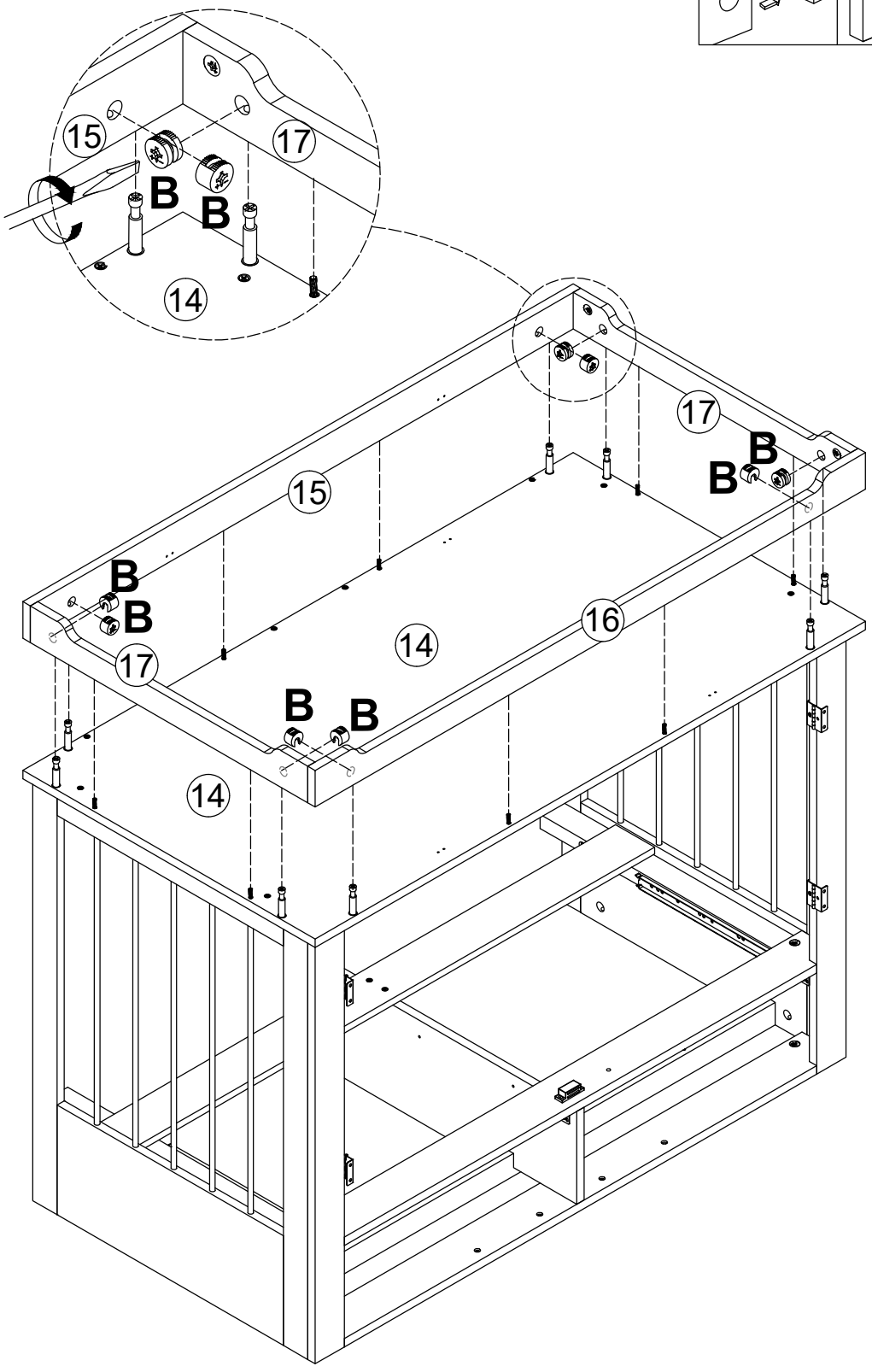

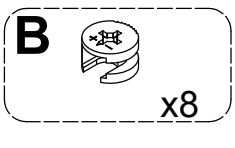

Installation steps

27.

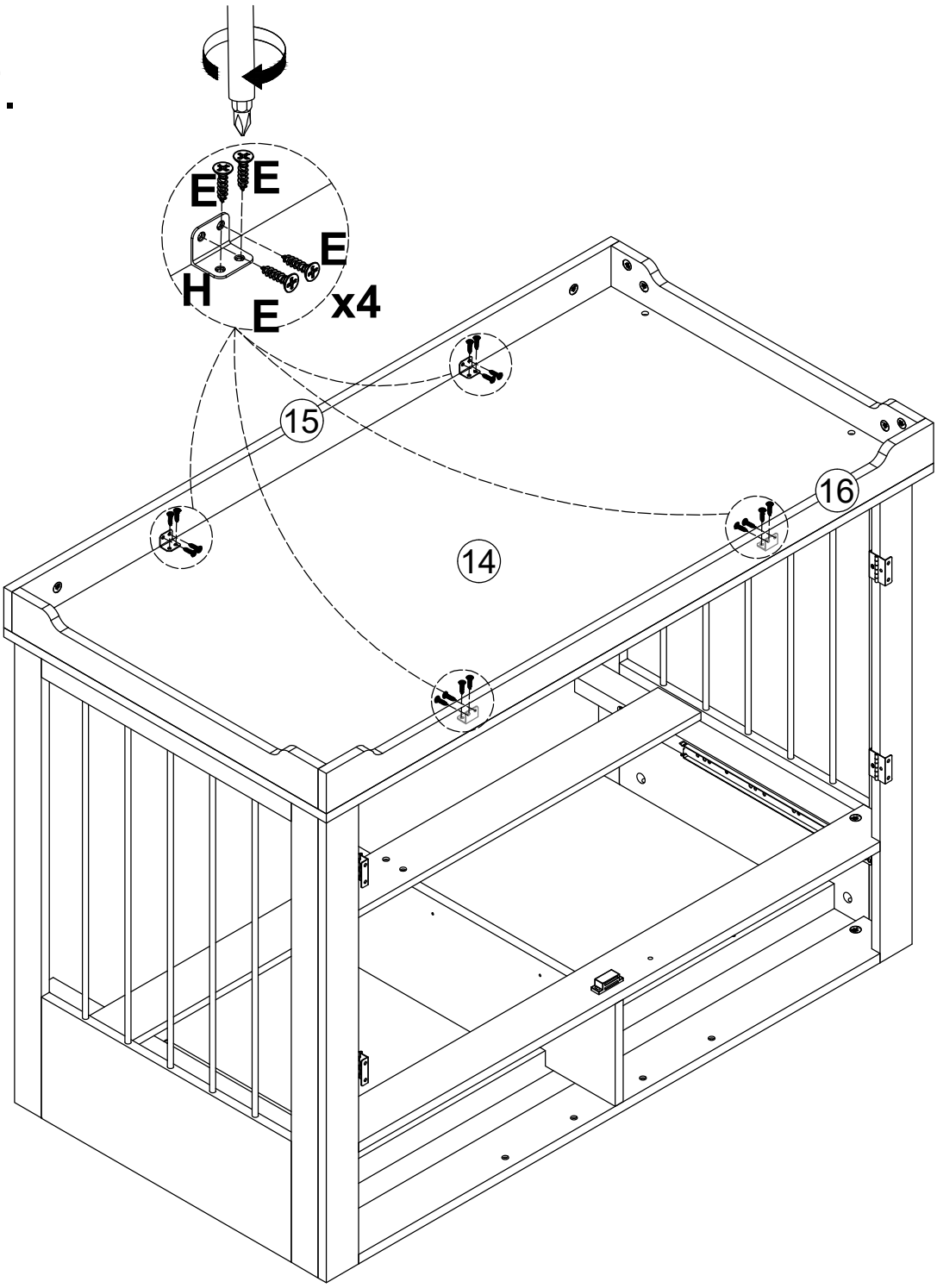

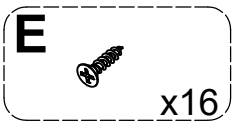

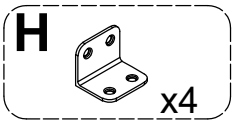

Installation steps

28.

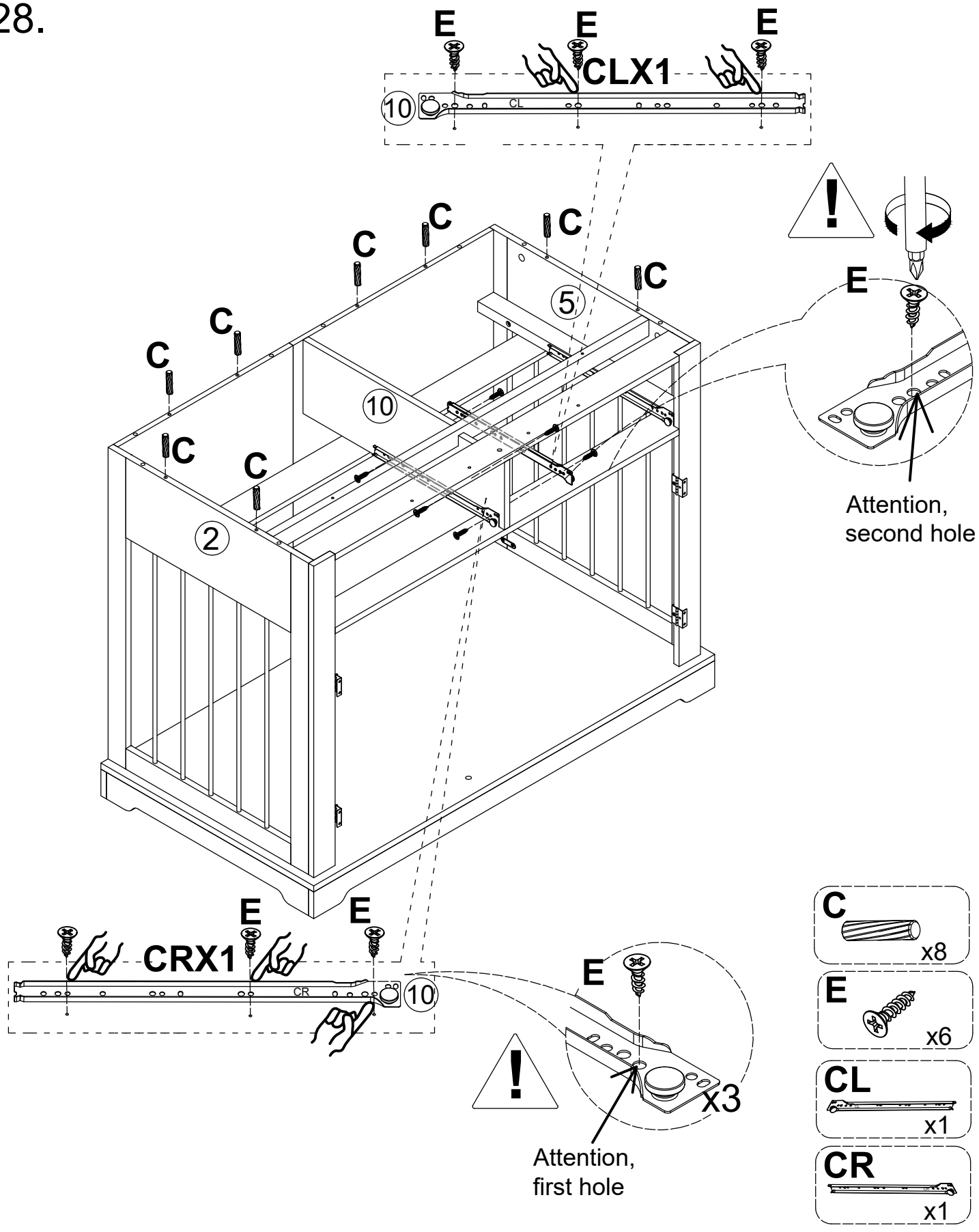

Installation steps

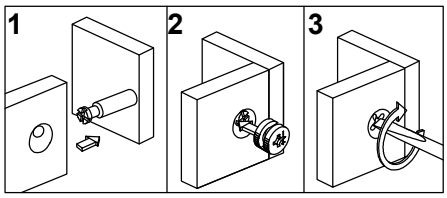

29.

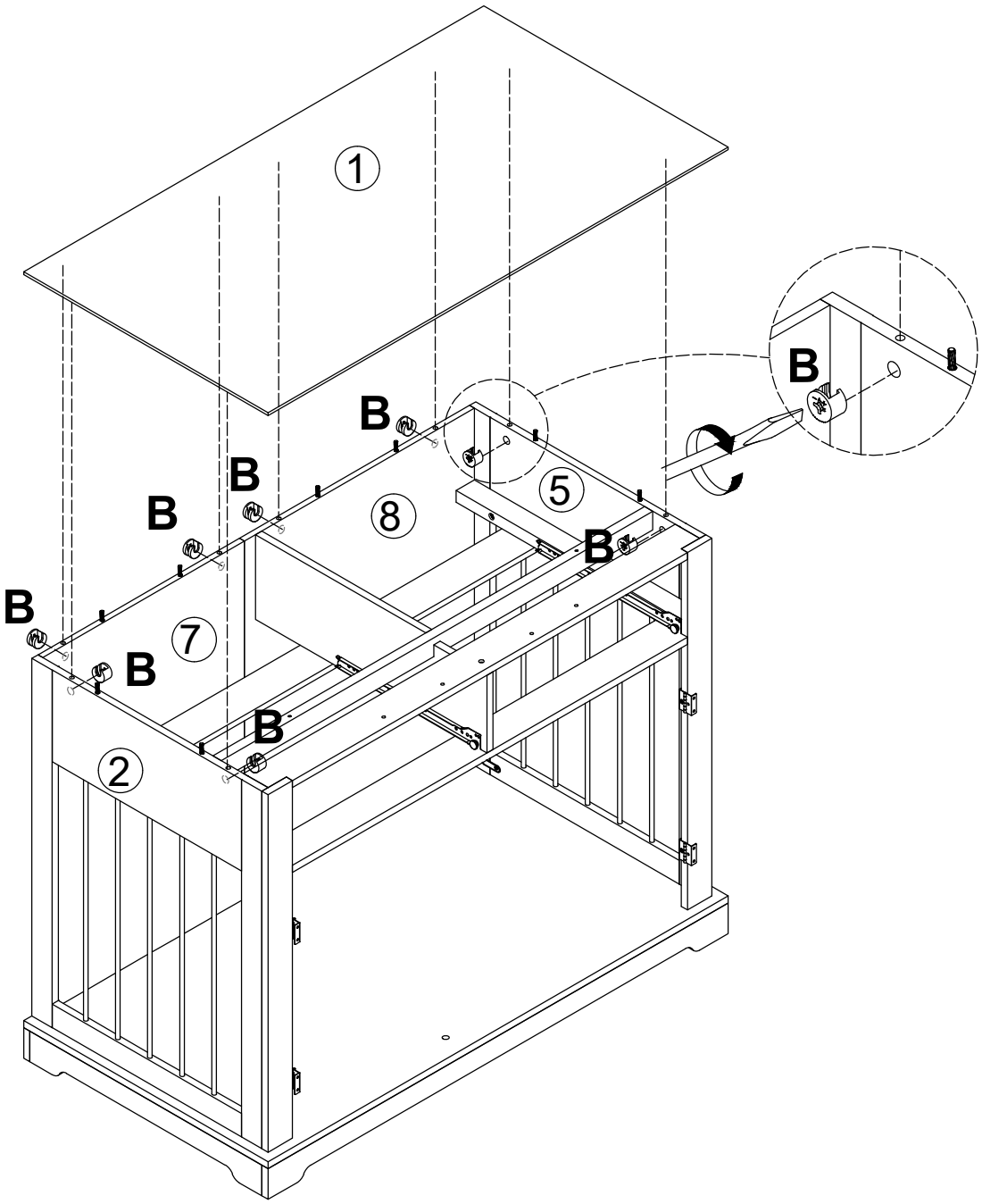

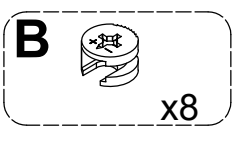

Installation steps

30.

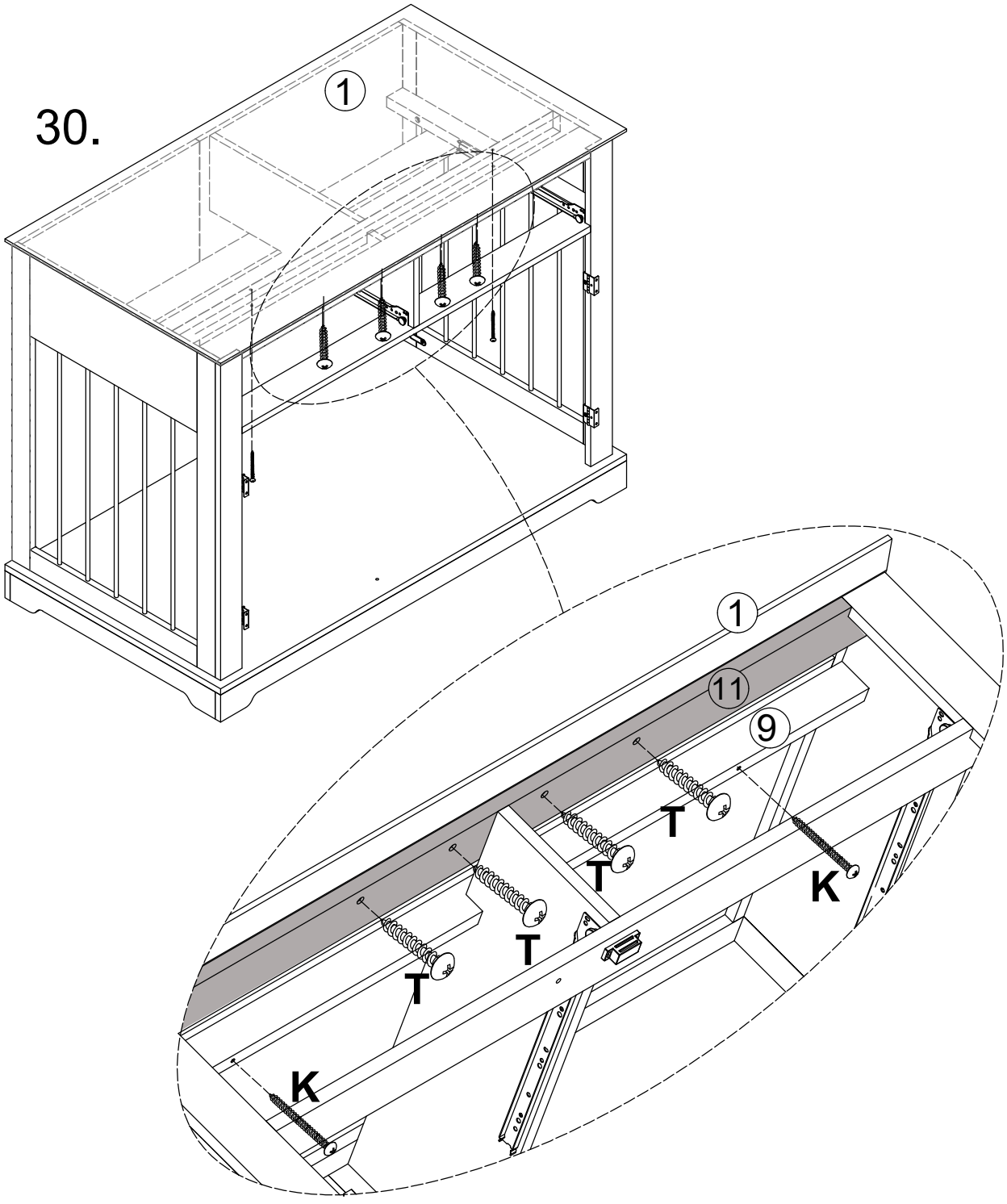

T screws are installed on Panel 11, K screws are installed on panel 9.

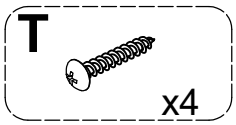

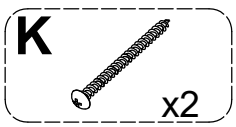

Installation steps

31.

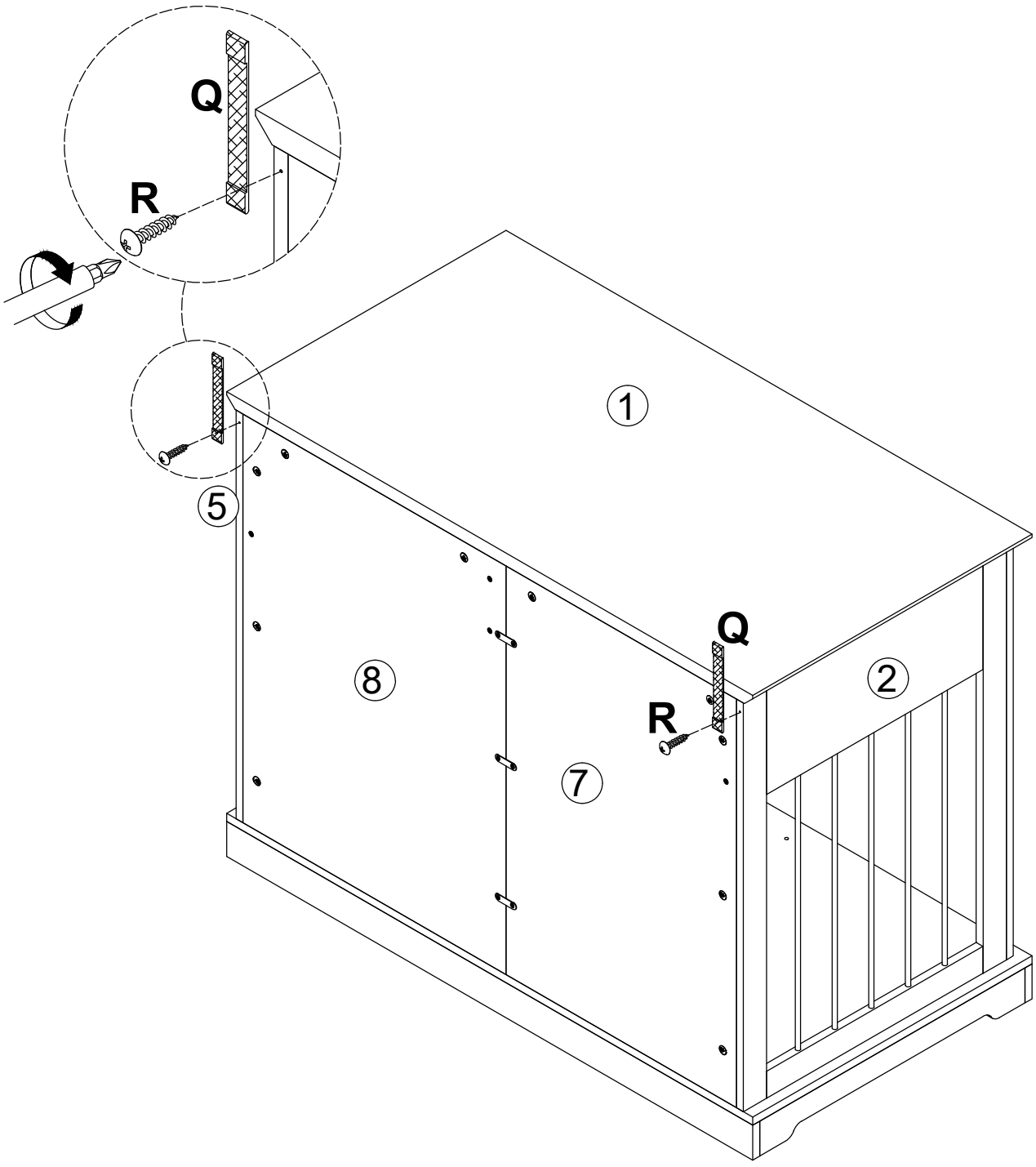

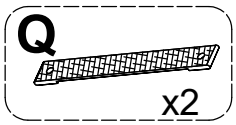

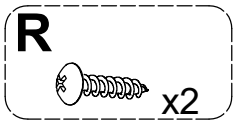

Installation steps

32.

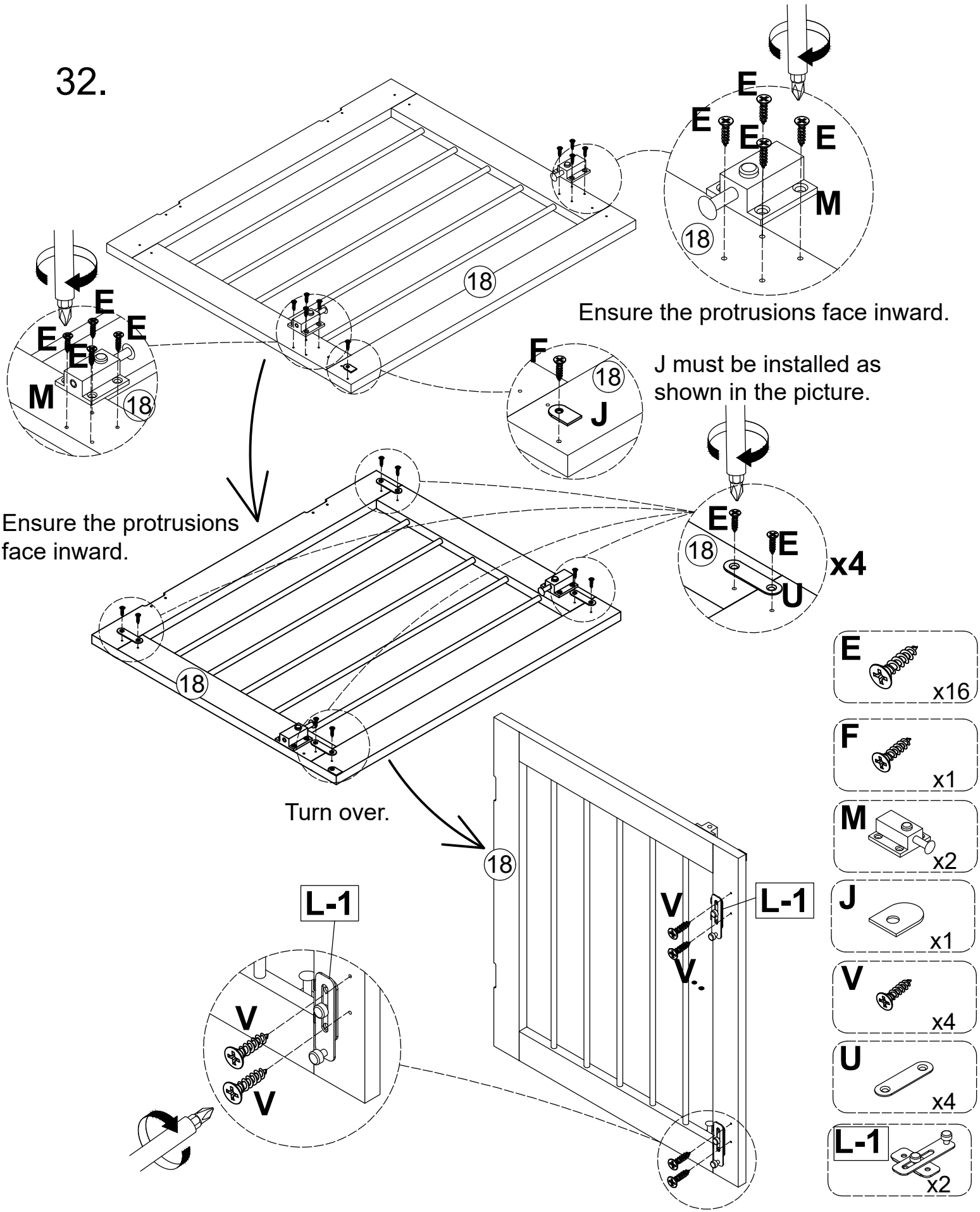

Installation steps

33.

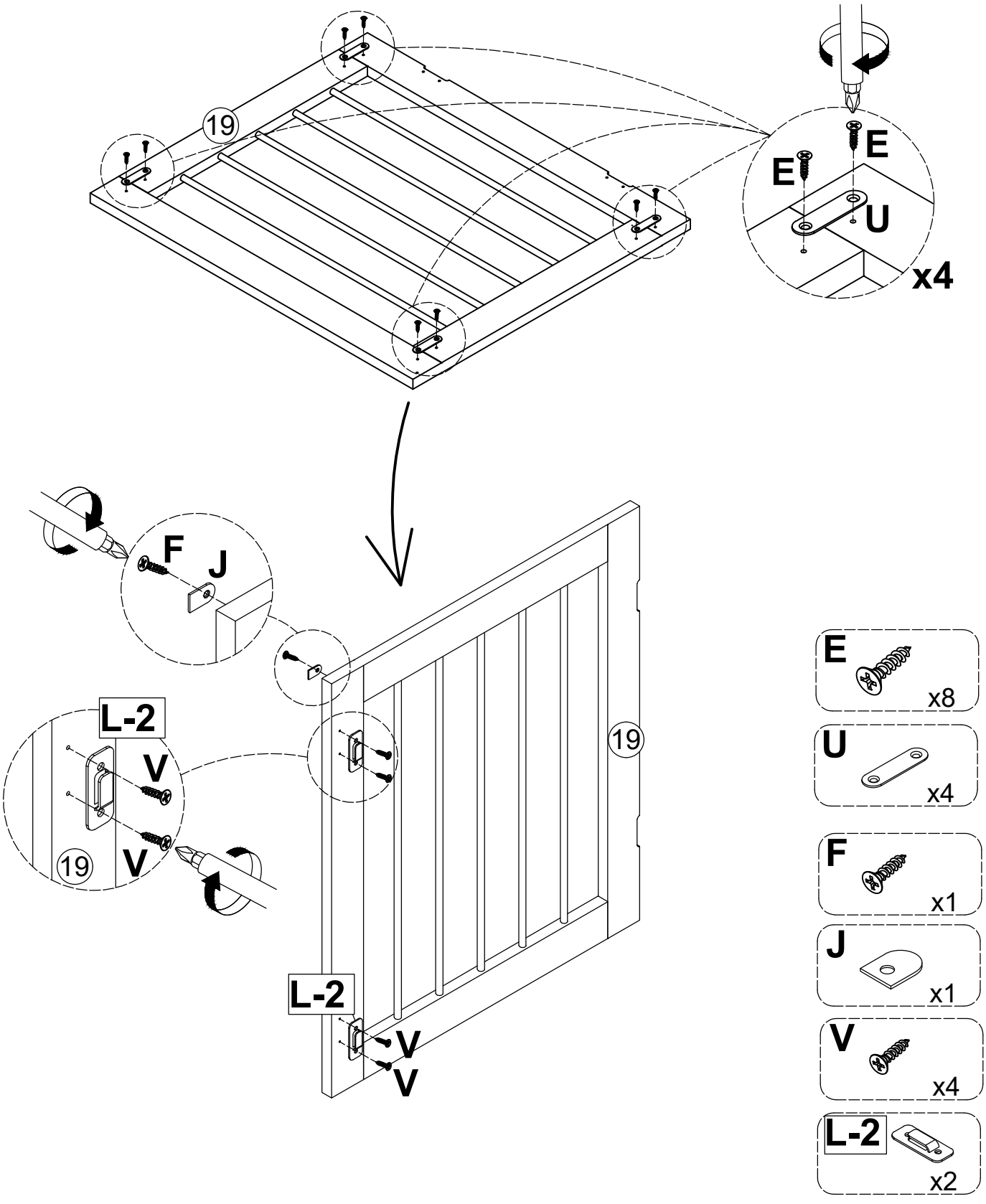

Installation steps

34.

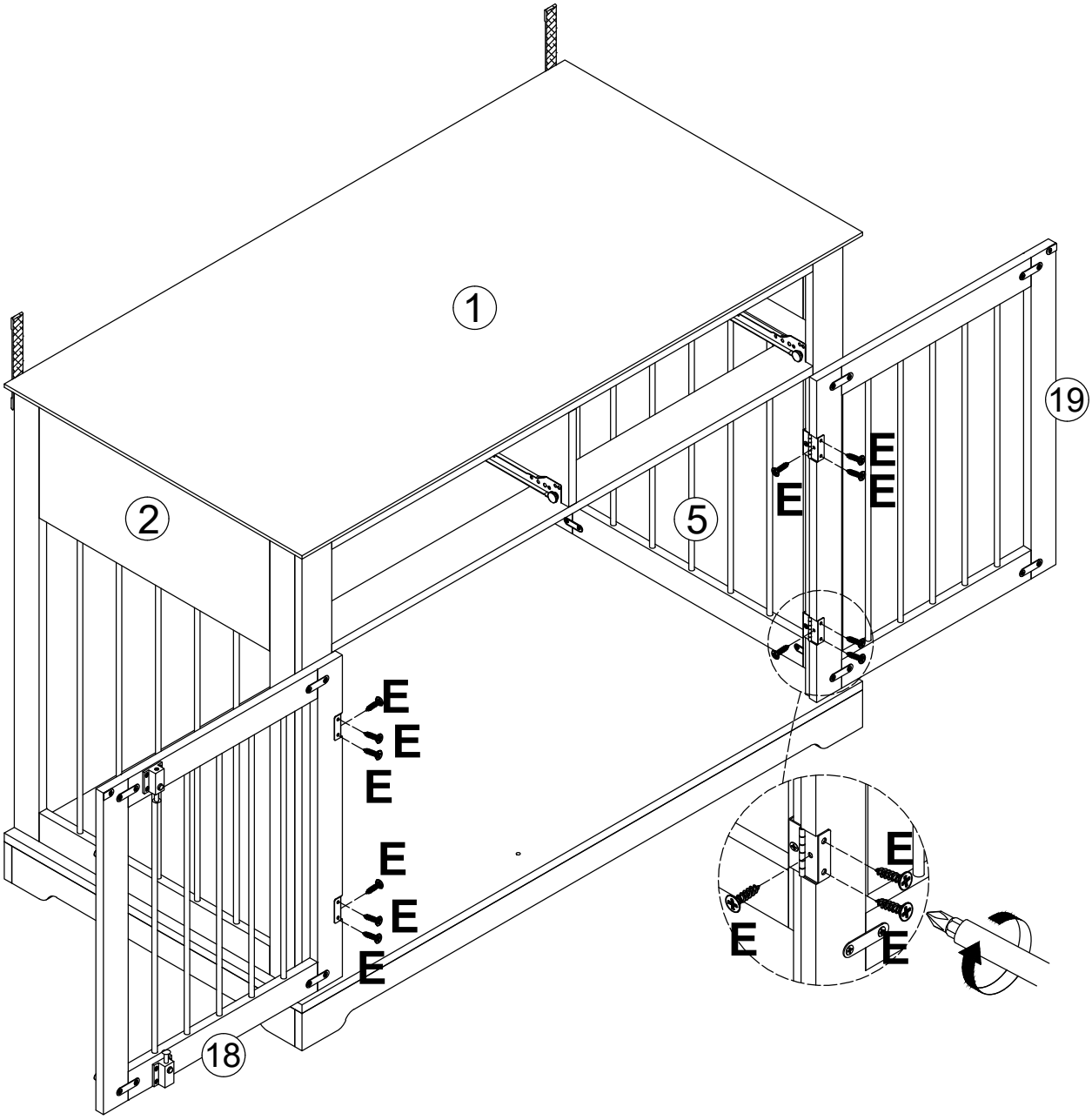

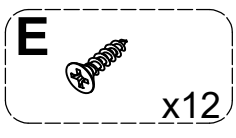

Installation steps

35.

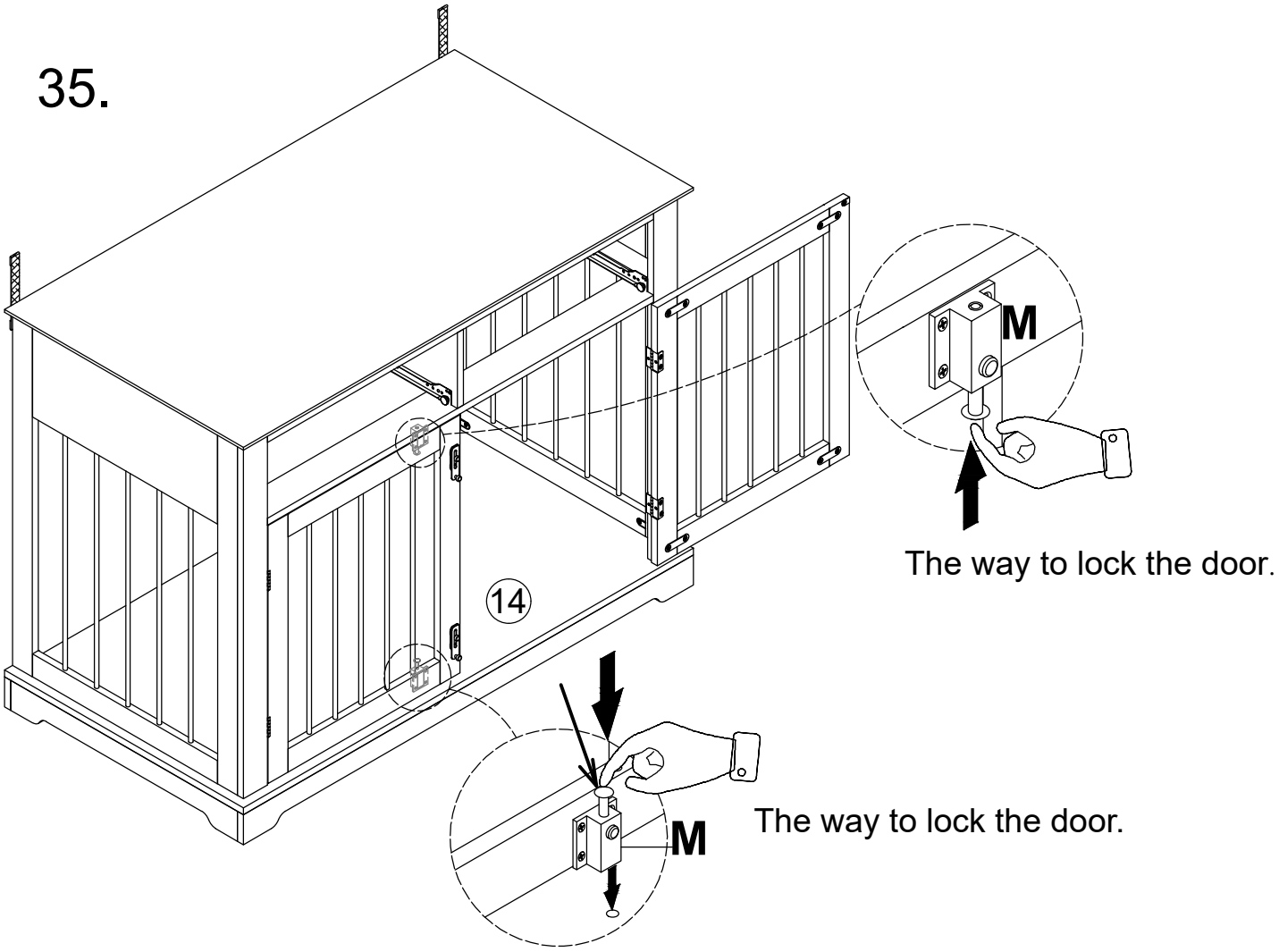

If the user needs to open door 18, please press the button on the accessory (M) by hand

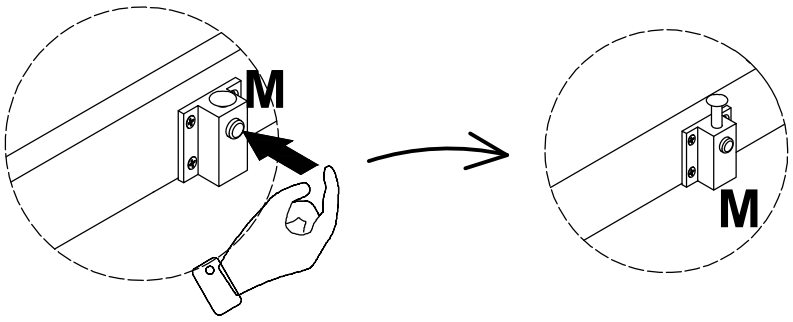

Installation steps

36.

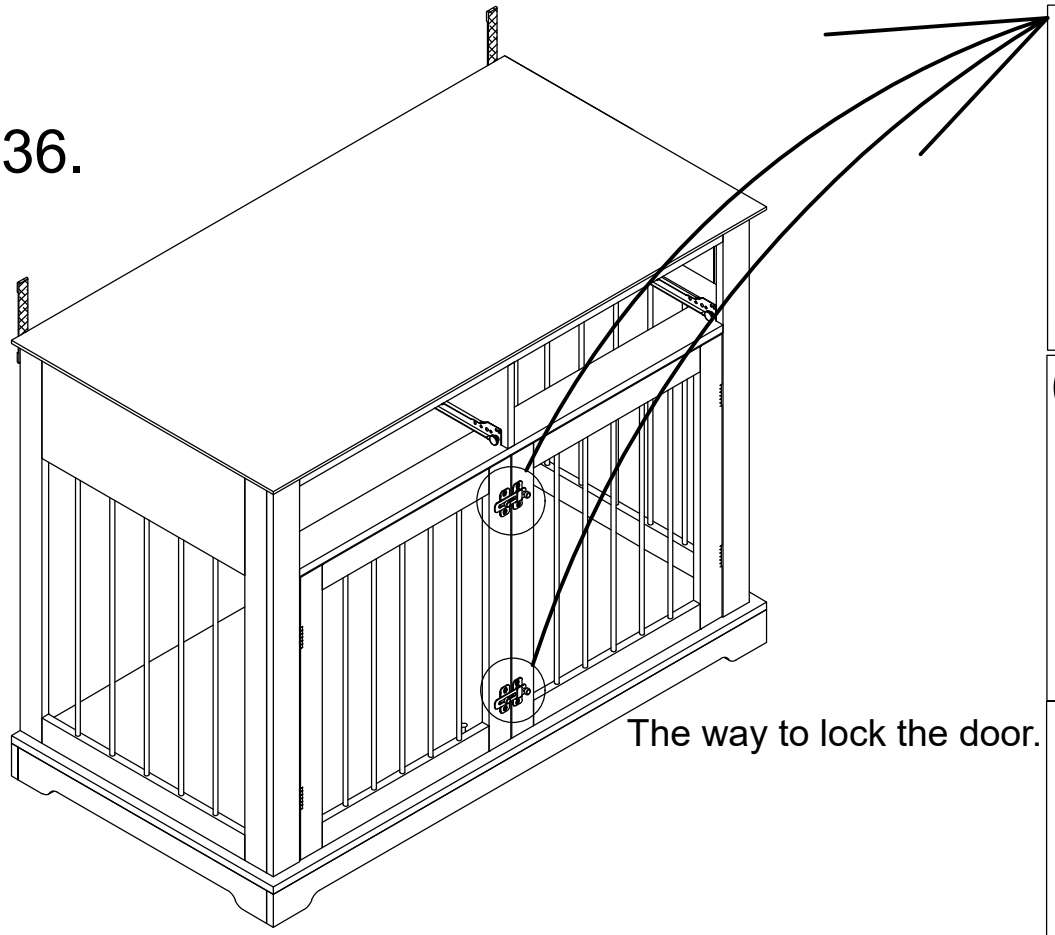

Place the product on a flat surface to prevent tilting.

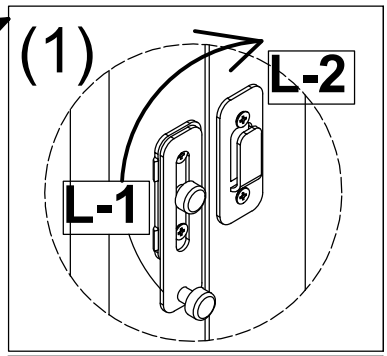

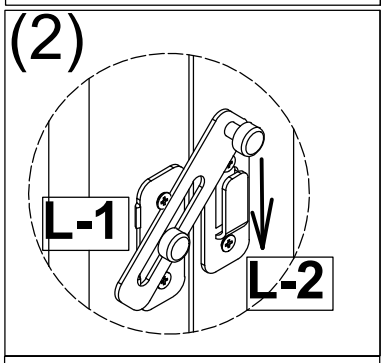

The way to lock the door.

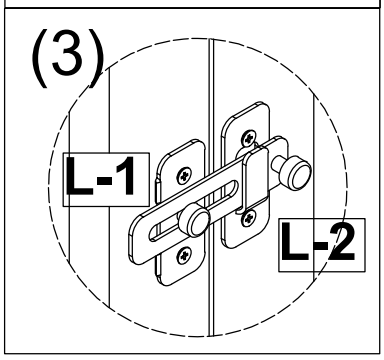

If the user wants to open the door lock L, as shown in the figure

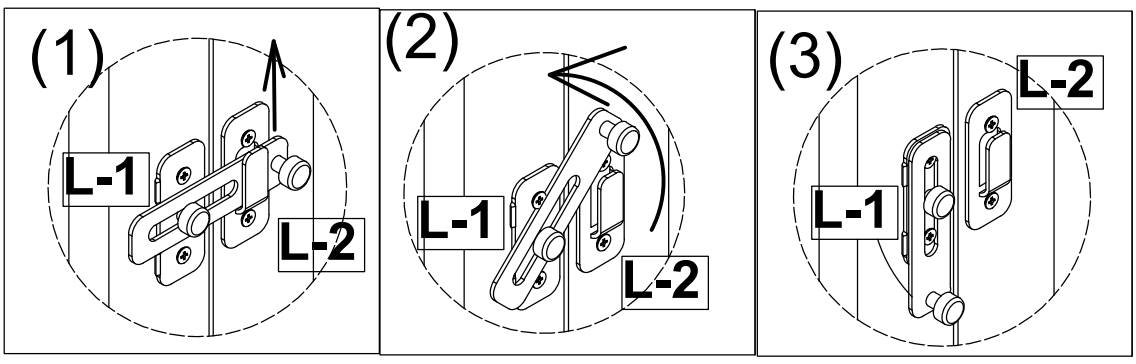

Installation steps

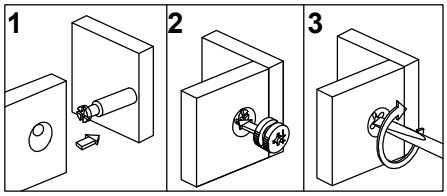

37.

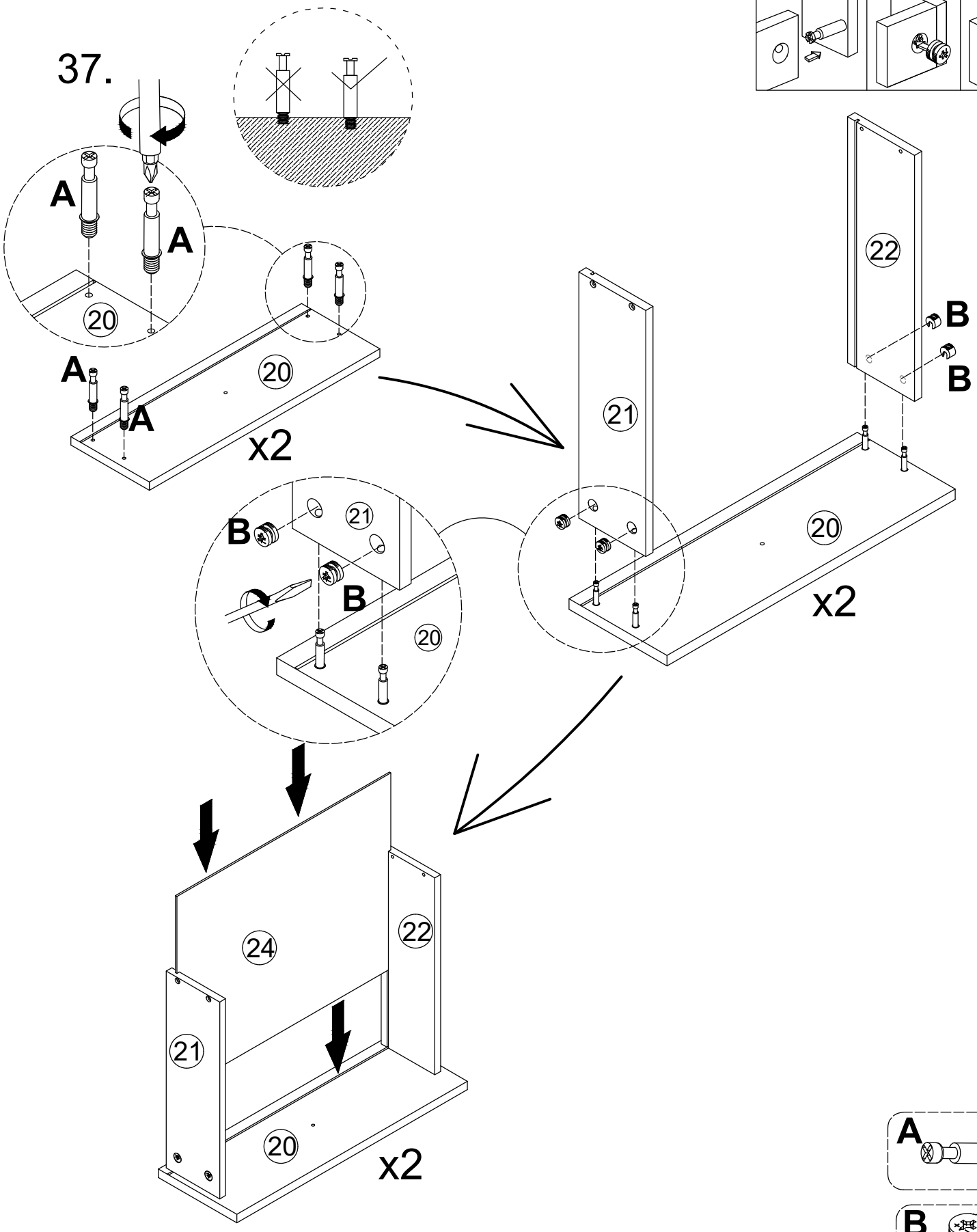

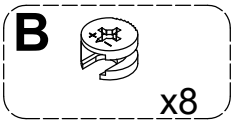

Installation steps

38.

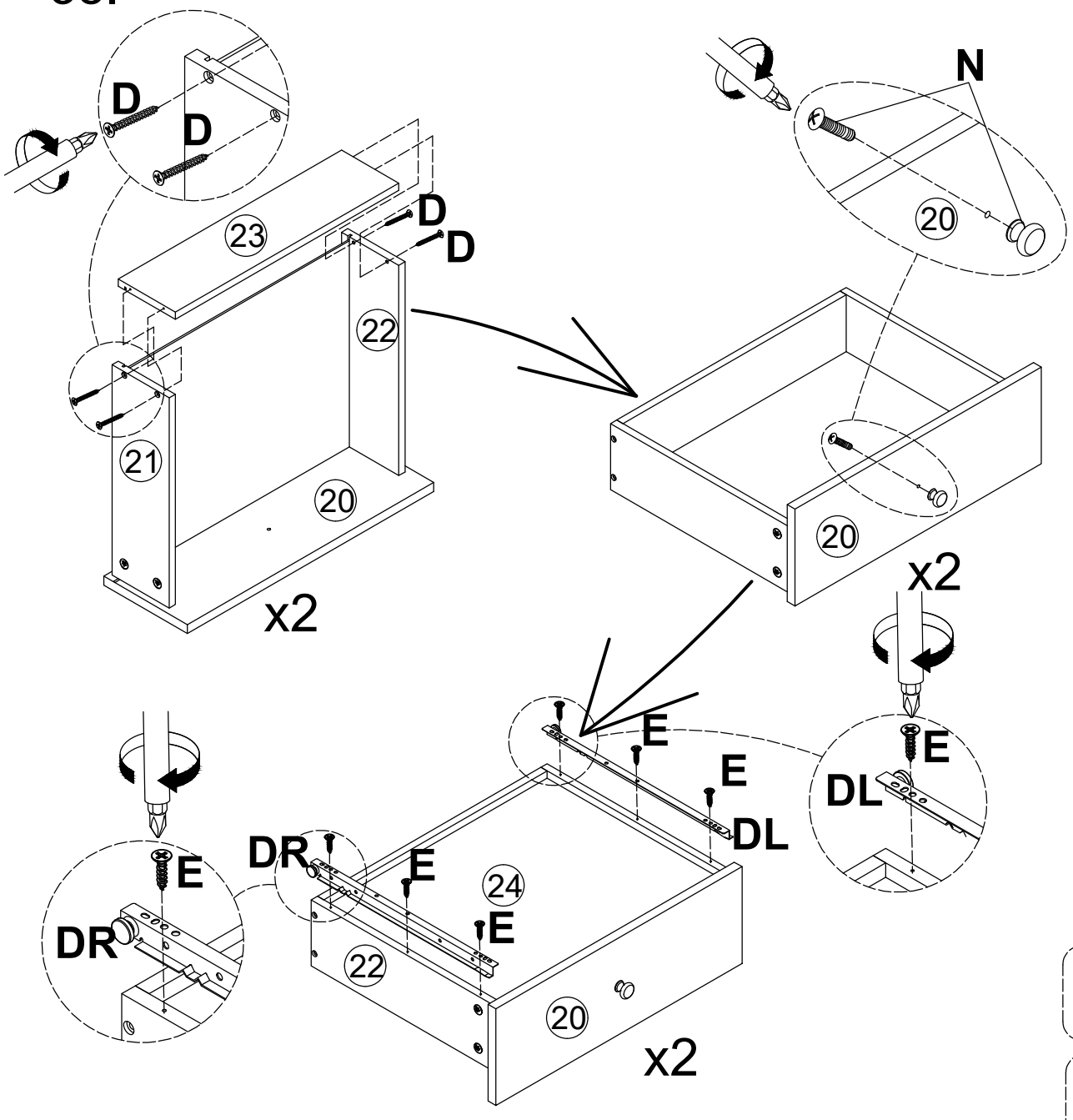

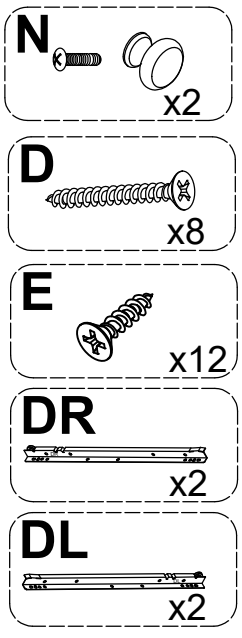

Installation steps

39.

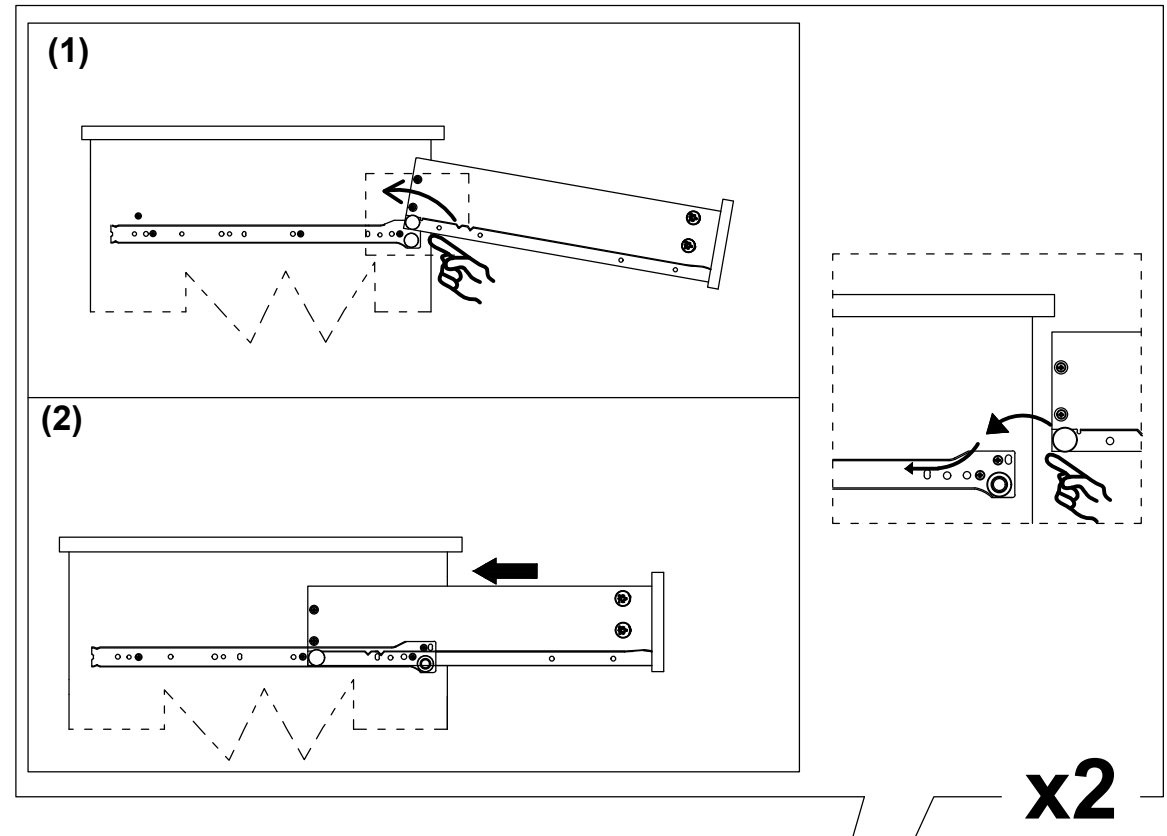

x2

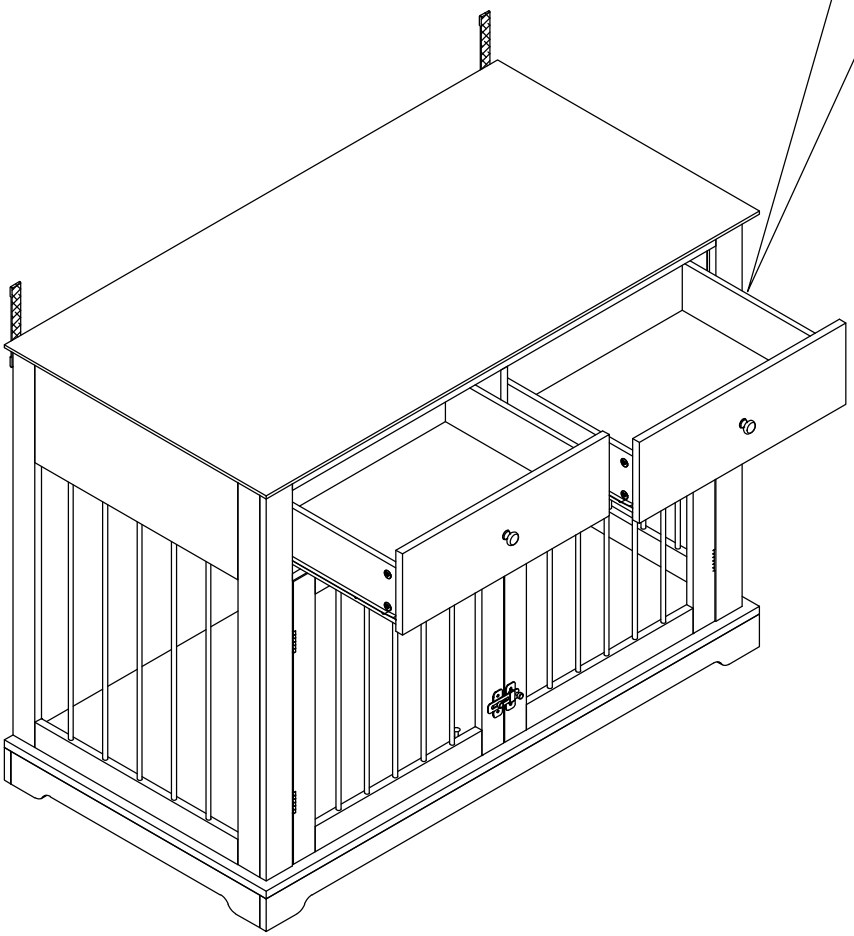

Installation steps

40.

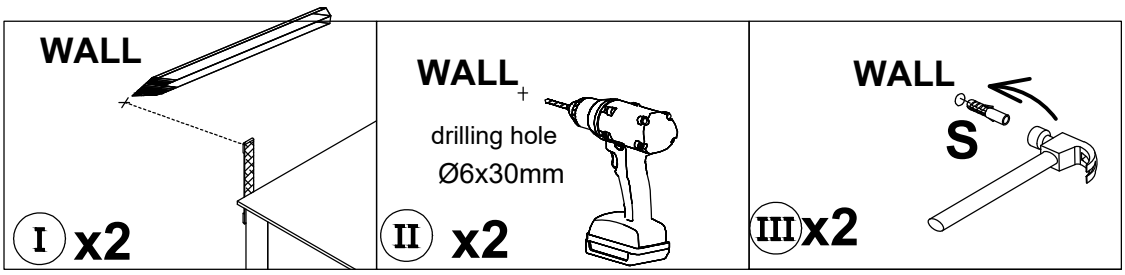

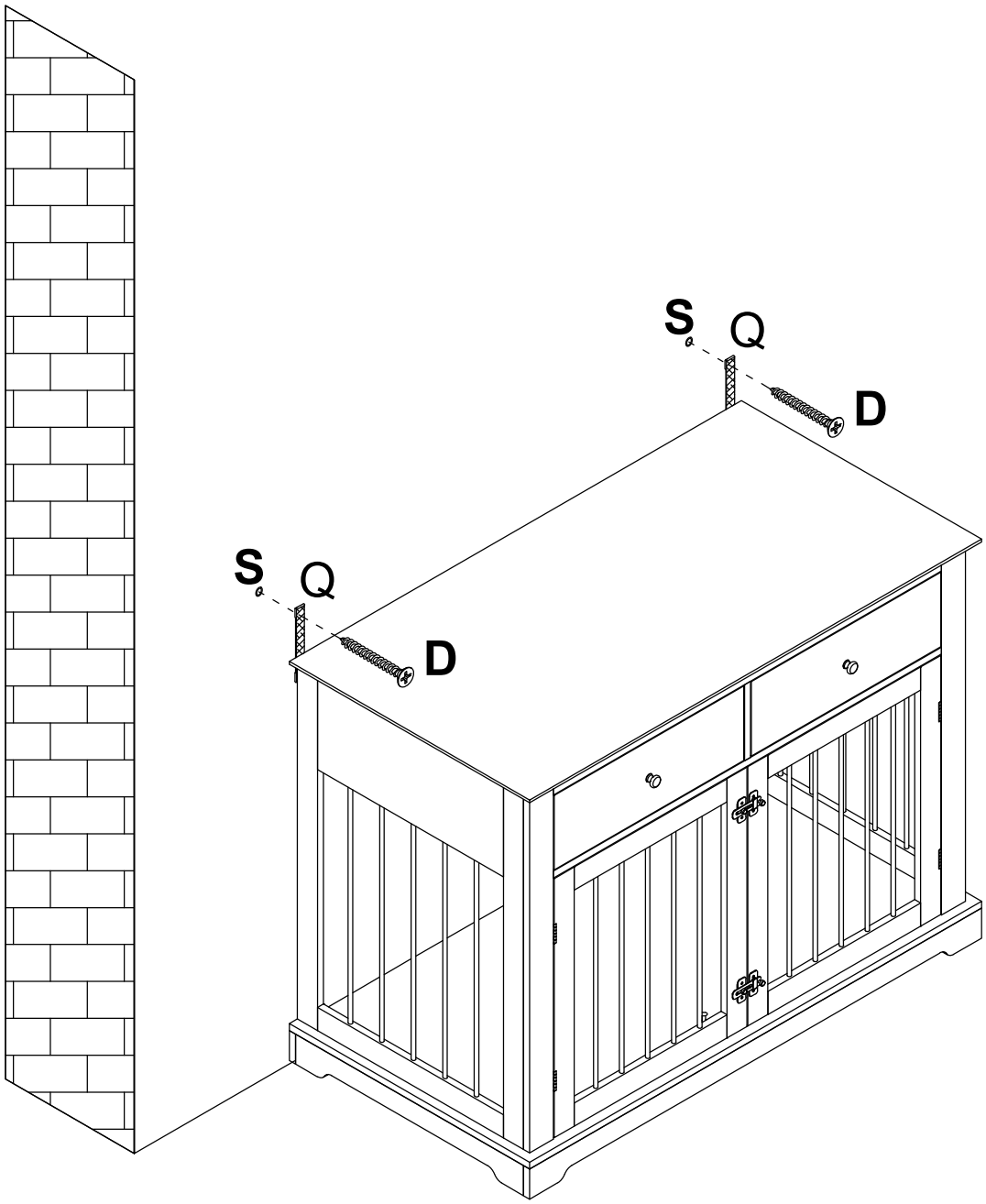

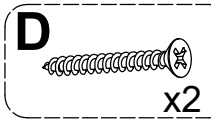

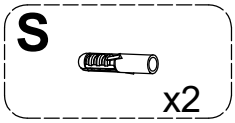

Installation steps

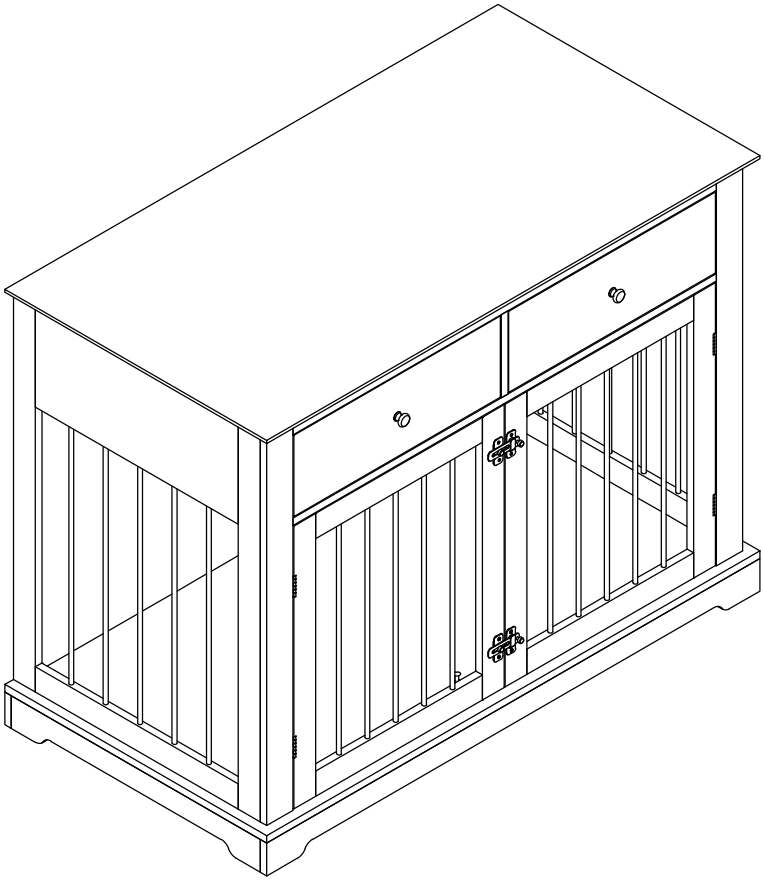

+1(503)928-7812
hellovitesse@gmail.com

Instagram: vitessegaming
YouTube : vitessegaming

Please feel free to **send us the text or email**. We will reply to you within 24 hours. Also please feel free to contact us if you have received the defective items. Due to time zone differences, please use emai as your first choice to communicate with us.

Follow our YouTube Channel then you will be able to find our **assembling video** as a pinned video.