ASSEMBLY INSTRUCTION

INSTRUCTION DE MONTAGE

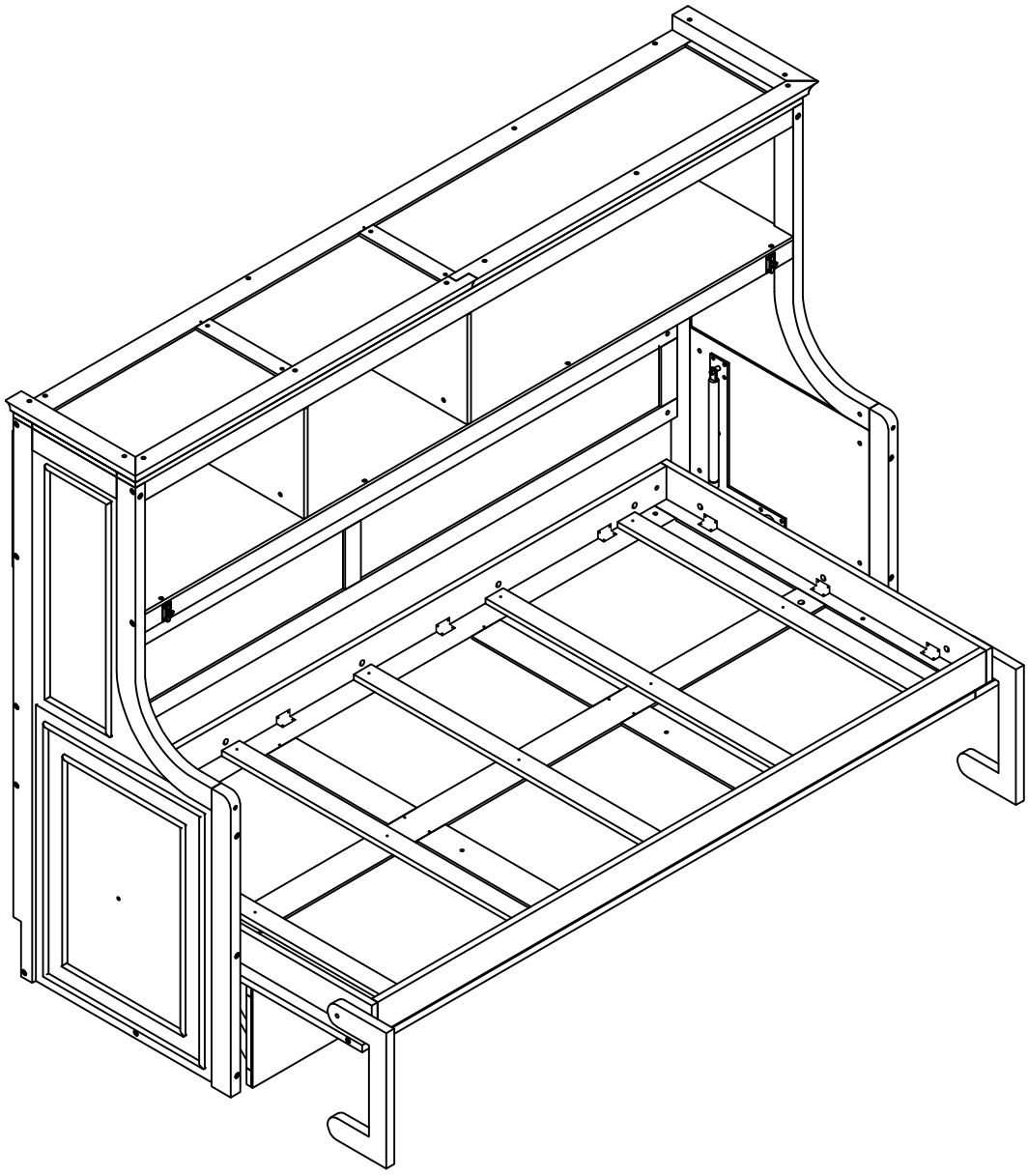



Four people are required to assemble and move this model.

Quatre personnes sont nécessaires pour assembler et déplacer ce modèle.

OPTION 1

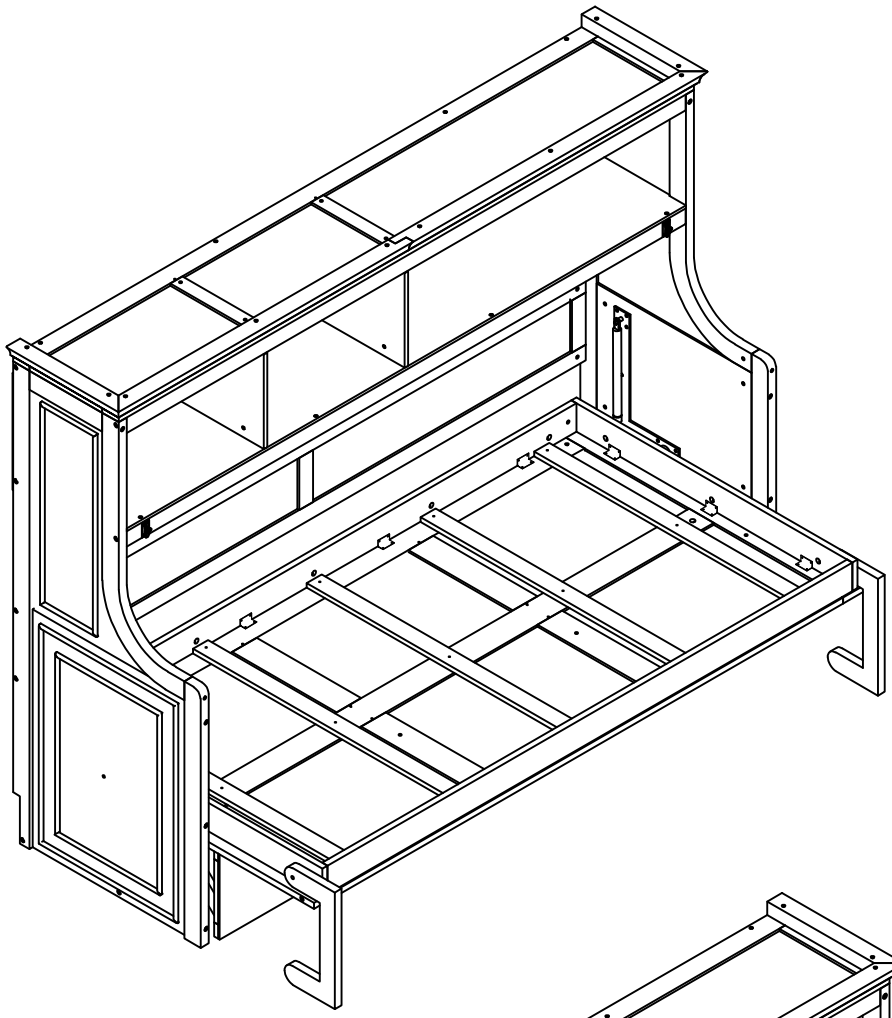

OPTION 2

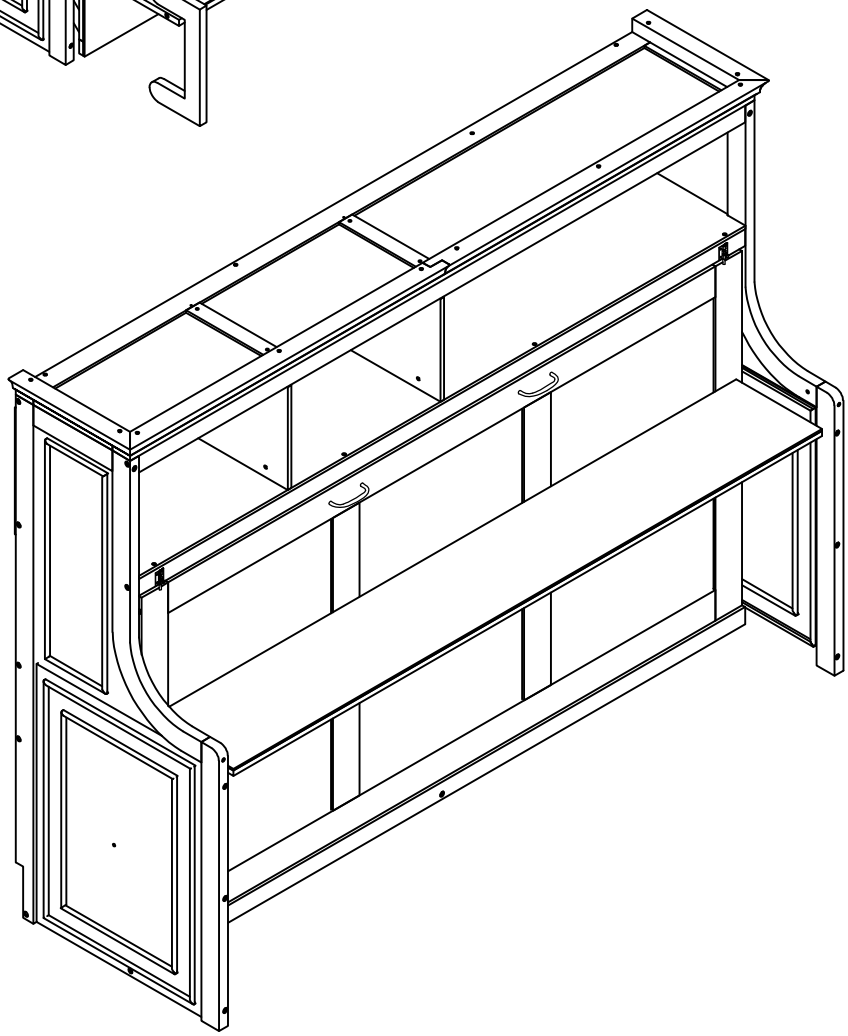

IMPORTANT INFORMATION PACKAGE.

THIS INFORMATION PACKAGE CONTAINS WARNING AND PRODUCT SAFETY INFORMATION. DO NOT PROCEED WITHOUT REVIEWING THOROUGHLY.

A. WARNING LABELS.

Your purchased Murphy Bed is delivered to you with WARNING LABELS to constantly remind you to take and adopt Safety Measure throughout the entire assembly and mounting points of the Bed to the walls.

DO NOT REMOVE these labels.

These Warning Labels serve as a Reminder Tool for visiting friends and relatives when using the Murphy Bed to ensure Safety Precautions are taken.

WARNING.

IMPORTANT SAFETY REQUIREMENTS - Bed Attachment to Wall.
For Your Safety, the Murphy Bed MUST BE ATTACHED to the Wall.

Seek Certified Professional Consultant / Contractors for their Services to:
1.) DETERMINE the WALL Type in Your Home;
2.) PRECISE HARDWARE that suits to the Wall Type in Your Home;
3.) INSTALL / ATTACH of the Murphy Bed to the Wall in Your Home;
4.) VALIDATE the Murphy Bed is appropriately and securely installed/attached.

The choice of wall anchoring hardware depends on the type of wall. This Murphy Bed is delivered with HARDWARE SCREWS suited for attachment to WOOD STUDS in walls. Any STUDS type detected with your Consultant-Contractors to be NOT WOOD STUDS - DISCARD and DO NOT USE these SCREWS. Use the hardware suitable for your wall material.

Seek the professional advice of your Consultant-Contractor and procure the appropriate hardware and brackets for the attchment of the Murphy Bed to the Wall.

FAILURE TO ADHERE TO THE ABOVE INSTRUCTIONS MAY RESULT IN SERIOUS and/or SEVERE INJURIES or Death caused by the detachment of the Murphy Bed from the Wall.

SAFETY PRECAUTION :

1.) **MAXIMUM Mattress Weight** suited to your Murphy Bed : **66 lbs (30 kg)**;
   MAXIMUM mattress thickness: 6 inches (15.2cm);
2.) **ENSURE ADULTS ONLY** throughout the entire assembly and attachment.
3.) **KEEP ALL Children, Non-Ambulatory persons and Pets** at bay during the entire assembly and attachment.

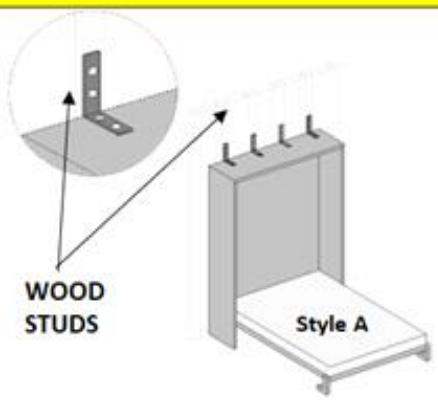

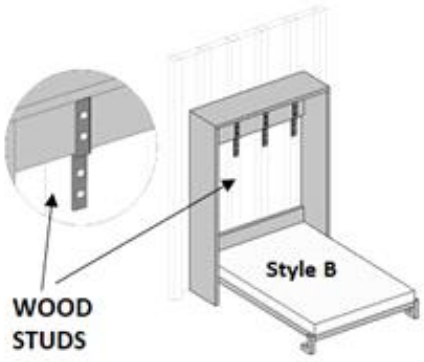

LINE ART for Reference only and **NOT DRAWN TO SCALE.**

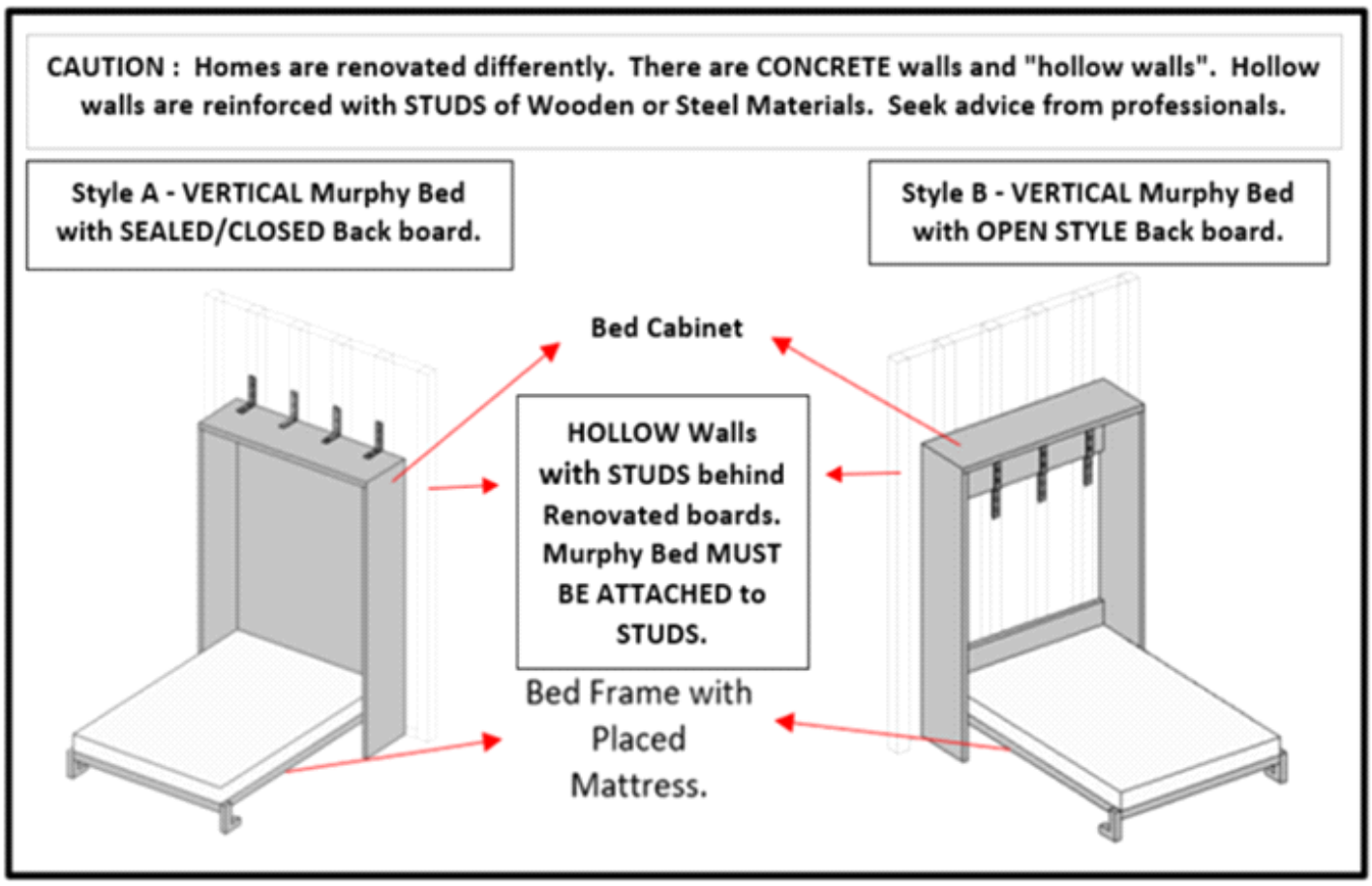

B. SAFETY REMINDERS.
MARKINGS in WALL - WHERE TO ATTACH the MURPHY BED.

Irrespective of the wall type, whether **Solid Concrete Walls** OR **Decorative Walls with WOODEN Studs** OR **Decorative Walls with Metal Studs**, ensure that

a. **) you choose a professional installer who has a good understanding of the wall structure where the Murphy Bed is anchored, including the position of the wall studs and structural components in the case of a wood or metal structure.**
b. **) precise markings of the positions of the anchor points are to be made on the wall for easy identification during the Murphy Bed attachment to the wall.**
c. **) the relevant and appropriate Hardware with Metal Brackets are READY for this attachment and are within easy access for prompt and efficient attachment.**

This product requires Professional Consultation and Installation*.

* When you choose the professional installer, make sure to comply with all applicable laws, regulations and rules in the city, state or country where the Murphy Bed is installed.

To have your Murphy Bed fully assembled and to achieve its intended functionality - you **MUST READ** through this entire Assembly Instructions Manual before you start the assembly of the bed

1.) **There are numerous Safety Issues and Safety Precautionary Actions that you MUST KNOW before you start the Assembly.**

2.) **CAUTION - Failure to FOLLOW / ADHERE to the GUIDE, WARNING AND REMINDERS here, may result in serious / severe injuries or death.**

3.) **PRECAUTION : For the assembly, Adult Partners only, to assist in the entire assembly**. **Ensure 4 (four) to 6 (six) ABLE BODIED PERSONS ONLY in the entire assembly and attachment of this Murphy Bed to the walls of your home.**

4.) **CAUTION : During the entire assembly process and attachment of the Murphy Bed to the walls of your home, Keep ALL Children, Non-Ambulatory Persons and Pets completely at bay**.

5.) SAFETY REMINDER on / to : Personal, Family Members and Pets. The Murphy Bed may be shipped to you in 3 to 5 packages and are HEAVY. Each carton holds many parts and components. Some of these components eg., bolts and screws are relatively small * in size.

***. During the assembly process, ensure that any misplaced bolts and nuts are picked up so that Children and or Pets do not play or ingest these.**

6.) This Murphy Bed is intended for ADULT USE ONLY.

7.) This Murphy Bed is delivered to you pre-packed with Hardware - suitable for wood-framed walls renovated with WOOD STUDS ONLY.

8.) **Your Home's Wall Type -** Every home is renovated differently with different wall(s) type / finishes. Before you proceed to assemble your Murphy Bed :

a.) **SEEK and CONSULT Professional Services** to ascertain the wall type in the designated location where you intend to attach the Murphy Bed;

b.) ENSURE the Consultant-Contractor specifically **INFORMS** you of the **WALL TYPE** in the designated spot where you intend to attach the Murphy Bed.

c.) **ENSURE** the Consultant **INFORMS** you specifically on the matching and relevant Hardware / Brackets to secure and attach the Murphy Bed to the wall.

9.) **WARNING - YOU MUST HEED THE INSTRUCTIONS** given by your appointed Consultant-Contractor on the :

a.) Mounting Hardware Type that suits the wall(s) type - where / when it is NOT WOOD STUDS, the **pre-packed Screws for Wood Stud Walls would not match/ not fit.**

b.) Number of Mounting Points for the Murphy Bed to the Wall.

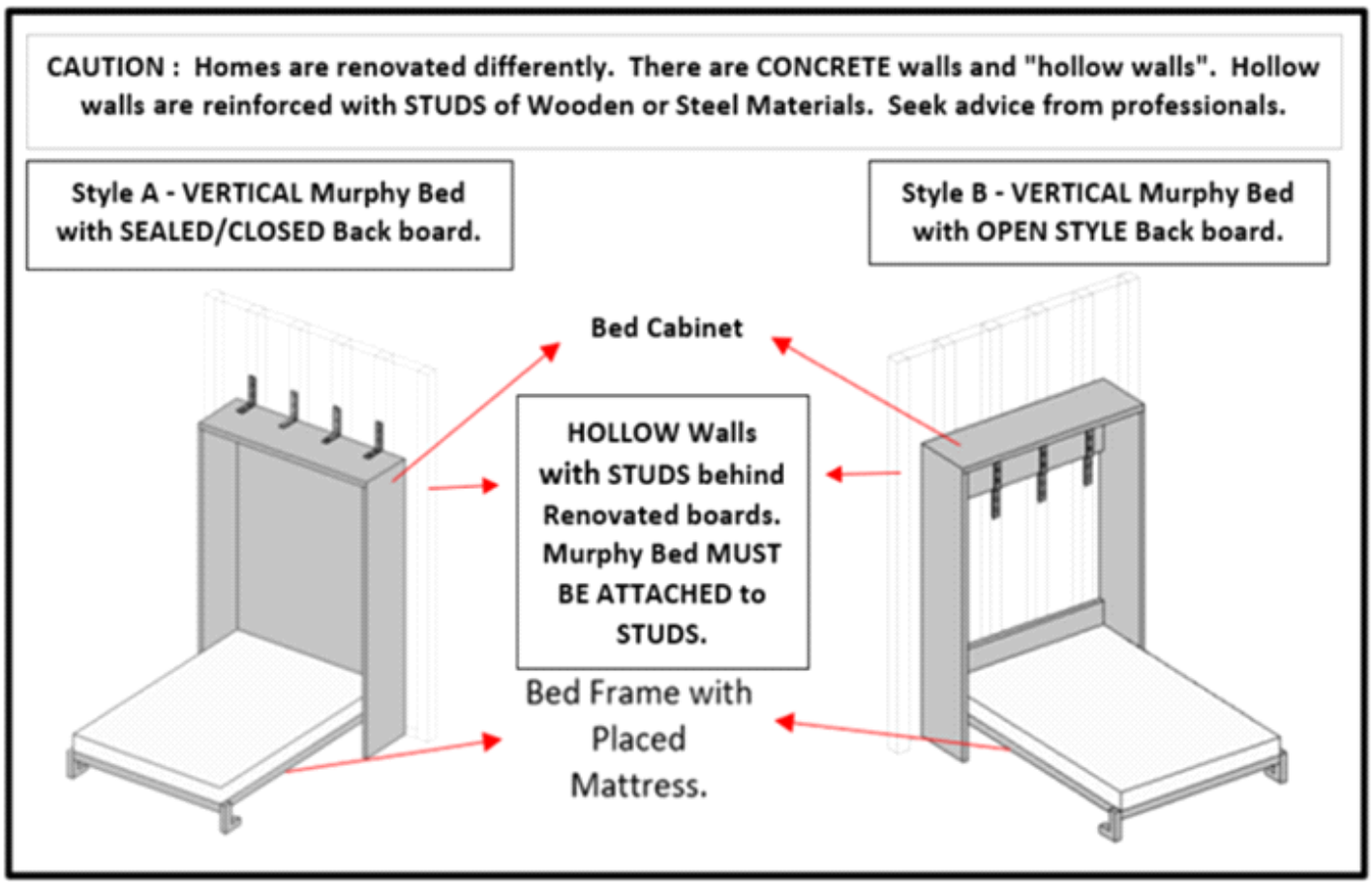

11.) This Murphy Bed is designed for home use and not intended for commercial use.

12.) This Murphy Bed is not intended to be moved, modified, uninstalled or disassembled once professionally installed.

A.) MOUNTING INFO & HARDWARE.

1.) REMINDERS :

a.) **In the event, that this pre-packed Screws Set does not match to the walls in your home - DO NOT USE / DISCARD these hardware.**
b.) **ADHERE to the Professional Consultant-Contractor** instructions and information on the **RELEVANT** mounting hardware that suits your wall.
c.) Procurement of these **RELEVANT** hardware is an arrangement made between your Consultant-Contactor and you.

* 2.) A step ladder (not provided) is needed to attach the L-Brackets to the wall, at the Top of the Murphy Bed. **DO NOT** lean against the Top of the Murphy Bed, it may cause sagging.

Murphy Bed Style A

L-Bracket Fixture to Wood Studs

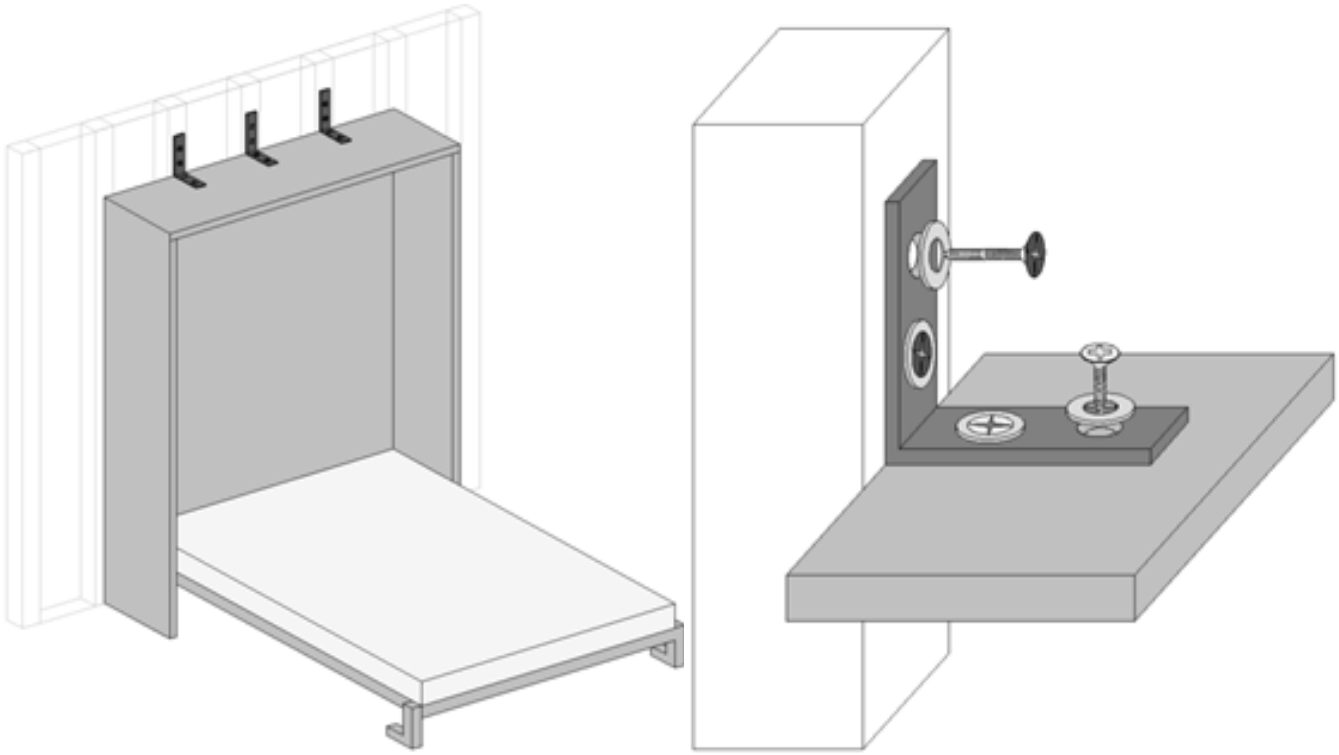

Z-Bracket Fixture to Wood Studs

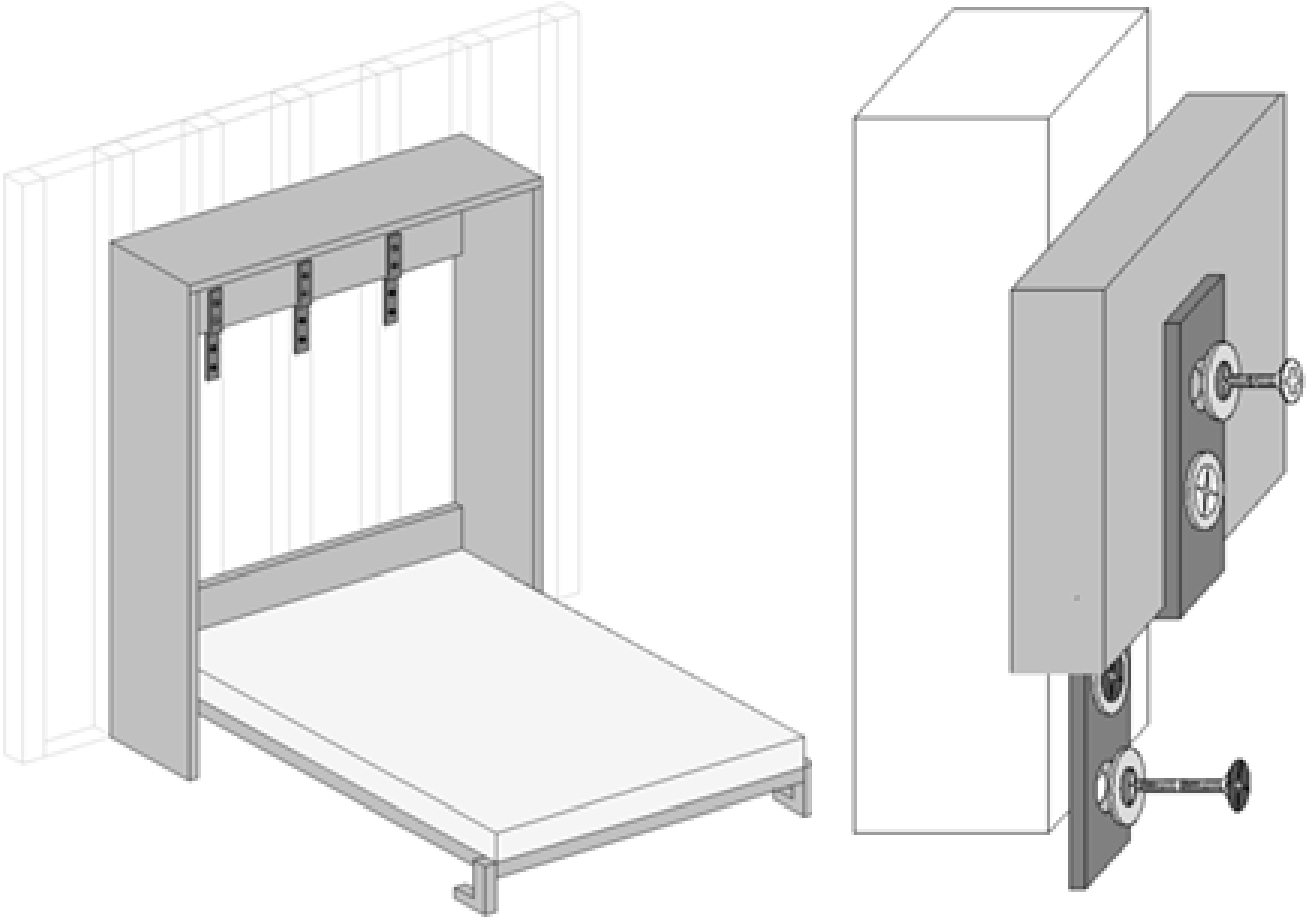

D.) IDENTIFICATION of TOOLS and ATTACHMENT SKILL.

The parts and components to assemble the Bed Frame are stated in the Assembly Instructions. Follow the instructions with attention.

For an efficient assembly, after opening the cartons shipped to you :

a.) open and layout all parts and components in sequence;
b.) account for every part, hardware and component;
c.) then lay out the parts close to each other;

Assemble and tighten each bolt / nut / screw up to 80% to allow for the Bed Frame and Bed Cabinet to be HELD together.

Upon FINAL assembly where all the parts and components are FITTED precisely, in a sequential manner - proceed to tighten each bolt & nut & screw gradually.

CAUTION :

1.) The METAL PLATES to the sides of the Side Rails - MUST BE FULLY and SECURELY TIED to the SIDE RAILS.
2.) The Piston L-Brackets that are attached to the INNER WALL of the Bed Cabinet - MUST BE FULLY and SECURELY TIED to these Inner Walls.
3.) These Metal Plates and the L-Brackets - are the components that are holding the Pistons that allow your Bed to "travel" to an OPEN or CLOSED position.
4.) Frequent Inspections of these Metal Plates / Brackets and Pistons Bolts, up to Once a Month - to ascertain these DO NOT BECOME LOOSE. For if these bolts to the Bed Frame and or Bed Cabinet or Pistons are loose, may cause the BED FRAME to become DISLODGED and cause injuries.

REMINDER : NEVER FULLY TIGTHEN any screw / nut or bolt in one session. If you DO TIGHTEN the hardware all the way into the core of the wood, this cause the parts to become skewed that would impact other parts of the item not being able to be aligned to its mounting points for assembly.

E. ALL ASSEMBLY WORKS REQUIRES A TEAM OF NO LESS THAN 4 ADULTS.

Reminder : Per above info, the cartons and products are heavy - therefore exercise CAUTION at all times and ENSURE YOUR TEAM OF 4 for the entire ASSEMBLY.

F.) ASSEMBLY of BED FRAME.

Identify all parts and components for the Bed Frame.
Assemble the Bed Frame according to the Assembly Instructions.

Upon completion of assembly of the Bed Frame, make a final inspection that all joints and parts are fully and securely attached.

Then place this assembled Bed Frame horizontally flat on the ground, some 10feet away, so as to allow room for the assembly of the Bed Cabinet.

G.) ASSEMBLY OF BED CABINET.

Identify all parts and components for the Bed Cabinet.
Assemble the Bed Cabinet according to the Assembly Instructions.

Upon the completion assembly of the Bed Cabinet, make a final inspection that all joints and parts are fully and securely attached.

CLEAR all debris in the area where your Murphy Bed is going to be attached to the wall.

Move this FULLY ASSEMBLED BED CABINET and position this BED CABINET some 2feet to 3 feet away from the designated Wall, where you have previously made markings.

SAFETY REMINDER - The Cabinet is NOT ATTACHED TO THE WALL, YET. From here on - YOU MUST HAVE 2 ADULT to HOLD and STABILISE this BED CABINET, to prevent the Bed Cabinet from TIPPING OVER.

H. ATTACHMENT OF BED FRAME TO BED CABINET.

Safety Reminder : DO ENSURE the 2 adult persons holding the Bed Cabinet is IN POSITION ALL THE TIME.

The other 2 adults shall lift and carry the Bed Frame and attach to the L-Bracket - at the inner walls of the Bed Cabinet.

Thereafter, gently LIFT THE Bed Frame to a CLOSED POSITION.

I.) ATTACHMENT OF PISTONS TO HOLD & SUPPORT BED CABINET TO BED FRAME.

The Murphy Bed, is now still placed at 2feet to 3feet, from the wall.

The 2 adults, upon attachment the Bed Frame to the Bed Cabinet, shall get the Pistons, and move to the back of the Murphy Bed. Both persons shall - then attach the Pistons to the Bed Frame and Bed Cabinet.

You may need to - LIGHTLY slide forward-backward to adjust and create gap space so as to enable the Pistons to be hooked to both ends of the hanging bolts in the Inner Wall of the L-BRACKET

Fully Secure and Tighten these Bolts at each end of the Pistons.

J.) Attachment of Safety Latches.

Upon completion of Step I above, ensure the entire structure of Bed Frame to Cabinet is fully and securely attached as ONE UNIT - affix the Safety Latches.

These Latches are to be reachable by Adults Only. Thus, the minimum height shall be no less than 5feet (1.5m) from ground.

K.) POSITIONING THE MURPHY BED INTO ITS FINAL POSITION.

At this juncture, the Murphy Bed is ASSEMBLED BUT NOT AS A FULL & COMPLETE piece of furniture AND NOT FUNCTIONAL AS A BED YET, as it is NOT SECURED TO THE WALL.

DO NOT ATTEMPT TO OPEN THE MURPHY BED AND OR TEST SLEEP AND OR LIE-INTO the Murphy Bed.

ALL 4 (four) adults shall now move the entire Murphy Bed to the FINAL DESIGNATED Position, matching to the previously marked "SCREW-IN" positions in the walls.

L) ATTACHMENT OF MURPHY BED TO WALL.

With the Murphy Bed now in its final designated spot, 2 adult persons shall continue to hold down the entire Murphy Bed.

REMINDER : FOLLOW the INSTRUCTIONS from your Professional Consultant / Contractor.

Position the Ladder (where necessary) and FULLY & SECURELY turn in the BOLTS or SCREWS into the CONCRETE WALL or WOODEN STUDS or STEEL STUDS.

SEQ	Bed Description	Bed Size	Details.
1	Single/Twin(XL)	~38*75/80~ inches	Attach at least 2 pieces of L or Z Hardware onto the Wall or Studs;
2	Full	54*75inches	Install at least 3 pieces of L or Z Hardware onto the Wall or Studs;
3	Queen	60*80inches	Install at least 3 pieces of L or Z Hardware onto the Wall or Studs;
4	King	76*80inches	Install at least 4 pieces of L or Z Hardware onto the Wall or Studs;
5	Other Bed Size		Other Bed Sizes - seek advice from your Contractor

Recommended Mattress weight (77)lb or (35)kg / Recommended Mattress thickness (8)in or (20)cm - Your Murphy Bed is made having taken into consideration the Bed Frame Weight and Mattress weight to pair with the Pistons Newton Force.

Therefore, load your bed with the RECOMMENDED MATTRESS Weights, Size and Thickness as stated here in the assembly instructions.

DO NOT LOAD any heavier and or LARGER and or LIGHTER Mattress than what is recommended here.

M.) MATTRESS PLACEMENT .

Only after the Murphy Bed is FULLY SECURED to the wall, the 2 adult persons who are holding down the entire Murphy Bed, can now be released for this action.

Have 1 to 2 persons - place equal strengths to the handles and gently and securely, PULL DOWN the Bed Frame until the Bed Frame is horizontally and level to the ground.

Have the other 2 persons - carry and place the Mattress (**within the recommended weight** and **thickness)** and gently place the Mattress on to the Bed Frame.

N) PISTON NEWTON-LOAD STRENGTH.

You are hereby reminded that when the BED FRAME is EMPTY OF MATTRESS, the Bed Frame may NEED a STRONGER force to be pulled down before you can place the Mattress.

This RESISTANCE to be PULLED DOWN is a normal characteristics of the Pistons Newton-Load force is “in action”.

O) BED STRAP - GUIDE STRAP

Your Murphy Bed may or may not come equipped with a Bed Strap.

This Bed Strap serves as a GUIDE STRAP to help you lift the Bed Frame some 6 inches or so off its resting position. Then use both hands to FULLY LIFT HOIST the Bed Frame to its closing position.

SAFETY REMINDER :

1. **) DO NOT USE THE BED STRAP to PULL DOWN TO OPEN the BED FRAME from its CLOSED POSITION.**
2. **) DO NOT USE THE BED STRAP to PULL-LIFT-HOIST the BED FRAME from the OPENED-HORIZONTAL position, to the CLOSED POSITION.**

Both the above may cause injury and or unnecessary strain to your arm(s).

P.) USING YOUR MURPHY BED.

For EVERY USE - exercising Safety Precautionary Measures to ensure the safety of your family members and pets **are** IMPORTANT.

Therefore, PRIOR TO OPENING / PRIOR TO CLOSING OF YOUR MURPHY BED - Make sure all Children / Non Ambulatory Persons and Pets are at bay.

KEEP CHILDREN and NON-AMBULATORY persons from Unlatching the Safety Latches.

Q.) CAUTION : DO NOT BE DISTRACTED During EVERY OPENING and CLOSING of your Murphy Bed.

Every time you Pull to **OPEN** the Murphy Bed from its closed position OR **Lift-Pull to CLOSE** the Murphy Bed to stow it into the Bed Cabinet -

- give these actions your focused and dedicated attention.
- **DURING EVERY OPENING and CLOSING of your Murphy Bed** - always ensure you have an Adult Partner close by for added assistance, where necessary.
- **DO NOT OVER EXERT ADDED FORCE to OPEN the Bed or to CLOSE the Bedframe**. For if you do, the resistance of the Piston will only make it harder for you to complete the task.
- **TO CLOSE the Murphy Bed** : depending on your height - stand some 6inches to 10inches away from the FootBoard edge. Use both your hands and place both hands at about equal distance from the middle of the Bed Frame, spaced at 2 to 3 feet between your hands - GENTLY LIFT-PULL to Close your Murphy Bed.
- **TO OPEN the Murphy Bed** : using equal force - **place your hands to the installed grab handle** and GENTLY PULL towards you to Open. **As you pull Open the Murphy Bed - proceed to move backwards, slowly and steadily, so as to give way to the Murphy Bed's OPEN Position.**

- During **EVERY OPENING or CLOSING** of the Murphy Bed - at about your hip level - you may find that you need to rotate your hand / wrist - take caution here to prevent injury.
- During EVERY OPENING and CLOSING, keep Children and Pets and Non Ambulatory Persons at bay.
- **NEVER** allow your children to treat this Murphy Bed as a Hide and Seek place of fun or jump on the bed.
- **Care & Maintenance -** Depending on the frequency of use of your Murphy Bed, it is
- recommended that you take precautionary Care and Maintenance. It is advisable to conduct NO LESS THAN 2 to 3 checks annually on these mounting points & pistons to ensure that these are securely bolted. Where necessary, use a vacuum cleaner to clear all dust and then wipe down with a damp cloth, then proceed with your maintenance work.

Safety Latches - Your Murphy Bed comes with two (2) Safety Latches. These are to be attached at, both the TOP LEFT and TOP RIGHT hand upper portion**, minimum of 5 feet (1.5m) from ground**, of the Bed Frame / Bed Cabinet. Monitor and Inspect these frequently.

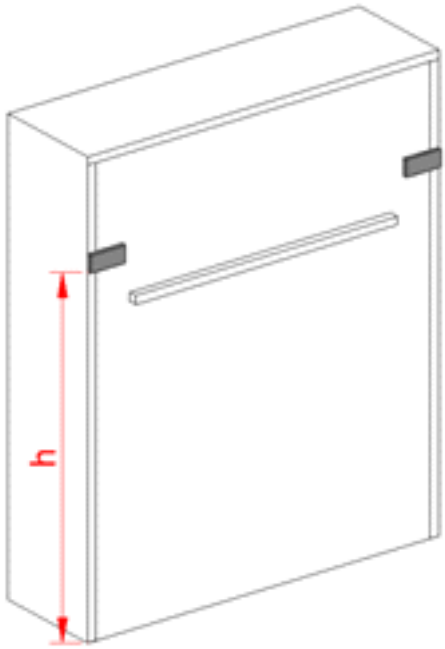

- Whenever NOT in use and after the Murphy Bed has been LIFTED and stowed in its **CLOSED POSITION - ALWAYS LATCH UP**.

Frequently Asked Questions.
Malfunctioned Pistons.

How do you know when the Murphy Bed's Piston has malfunctioned?
It would be quite evident in that :

a.) the Bed Frame may become LOPSIDED and
b.) the Lift-PULL force to CLOSE may be "heavier" than before.

IMMEDIATELY - STOP USING YOUR MURPHY BED.
SEEK and CONSULT professional maintenance service to ascertain the problem and repair and or have the pistons changed.

ASSEMBLY INSTRUCTION
INSTRUCTION DE MONTAGE

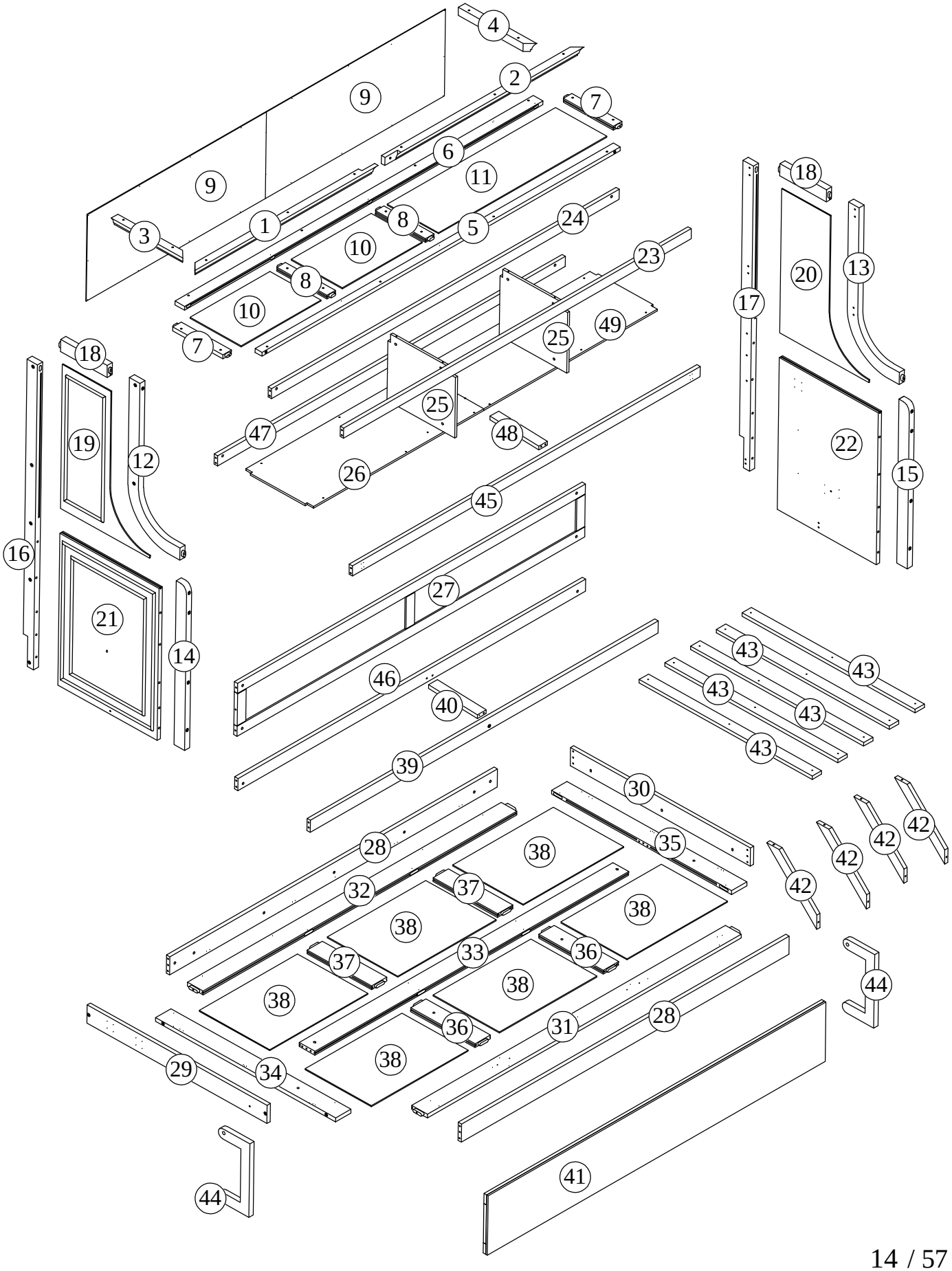

Part List (Box 1)
Liste des pièces (Boîte 1)

5 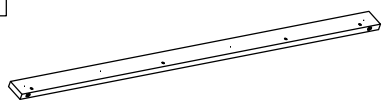 Front roof-1pc Toit avant-1 pe	6  Rear roof-1pc Toit arrière-1 pe	23  Horizontal front-1pc Façade horizontale -1pc
24  Across the back-1pc Dans le dos -1pc	45  Horizontal front-1pc Façade horizontale -1pc	47 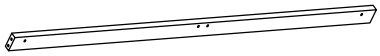 Across the back-1pc Dans le dos -1pc
39  Across the back-1pc Dans le dos -1pc	27 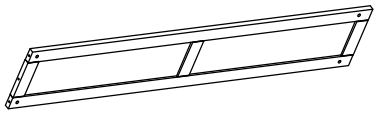 Rear frame-1pc Cadre arrière - 1 pc	28 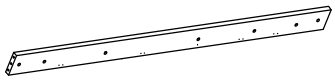 Shoulder bed-1pc Lit d'épaule-1pc
46  Across the back-1pc Dans le dos -1pc	41  Table top-1pc Dessus de table -1pc	

Part List (Box 2)
Liste des pièces (Boîte 2)

43 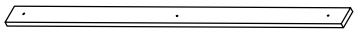 Slats-5pcs Lattes-5pcs	19 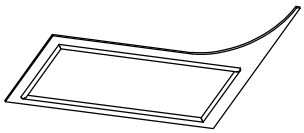 Upper left hip-1pc Hanche supérieure gauche -1pc	20 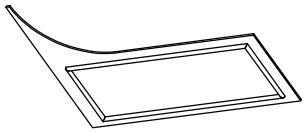 Upper right hip-1pc Hanche supérieure droite -1pc
21 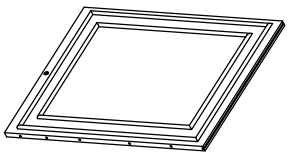 Lower left hip-1pc Hanche inférieure gauche -1pc	22 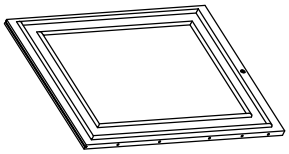 Lower right hip-1pc Hanche inférieure droite -1pc	10 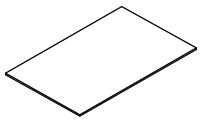 Left roof panel-2pcs Panneau de toit gauche - 2 pcs
11 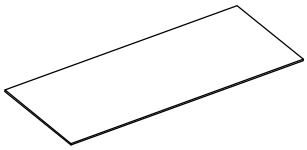 Right roof board-1pc Planche de toit droite -1pc	26 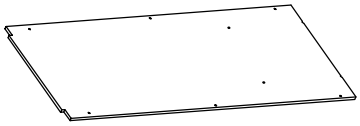 Left shelf-1pc Etagère gauche -1pc	49 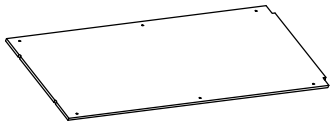 Right shelf-1pc Etagère droite -1pc
38 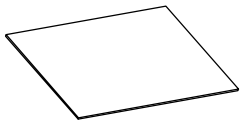 Panel-6pcs Panneau-6pcs		

Part List (Box 3)
Liste des pièces (Boîte 3)

1  Left roof only-1pc Toit gauche uniquement-1pc	2  Right roof only-1pc Toit droit uniquement-1pc	3  Only left hip-1pc Seulement la hanche gauche-1pc
4  Just right hip-1pc Juste la hanche droite-1pc	7 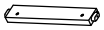 Hip roof-2pcs Toit en croupe-2pcs	8  Middle roof-2pcs Toit central-2pcs
9 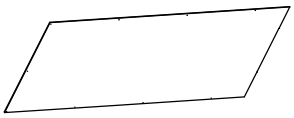 Backboard-2pcs Panneau-2pcs	12 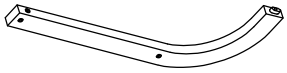 Left hip-1pc Hanche gauche -1pc	13 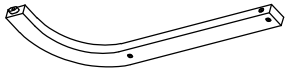 Right hip-1pc Hanche droite - 1pc
14 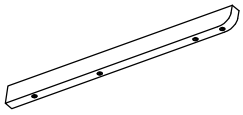 Left front-1pc Avant gauche-1pc	15 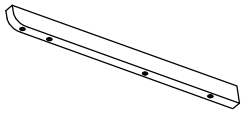 Must first-1pc Il faut d'abord-1pc	16 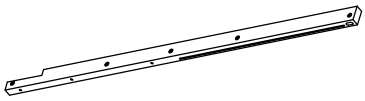 Rear left-1pc Arrière gauche-1pc
17  Must be later-1pc Ça doit être plus tard-1pc	18 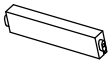 At hip level-2pcs Au niveau des hanches-2pcs	25 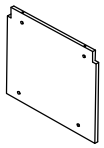 Partition board-2pcs Panneau de séparation -2 pcs
28 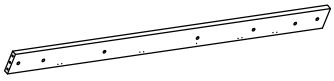 Shoulder bed-1pc Lit d'épaule-1pc	29  Shoulder bed-1pc Lit d'épaule-1pc	30 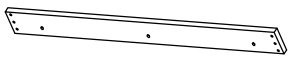 Shoulder bed-1pc Lit d'épaule-1pc
31  Support first-1pc Soutenir d'abord-1pc	32  Help later-1pc Aide plus tard-1pc	33  Middle support-1pc Support intermédiaire-1pc

34  Support left-1pc Soutien à gauche-1pc	35  Right support bar-1pc Barre de support droite-1pc	36  Middle support-2pcs Support intermédiaire-2pcs
37  Middle support-2pcs Support intermédiaire-2pcs	40  Middle bottom-1pc Milieu en bas-1pc	42  Support the table top-4pcs Support de table-4pcs
44 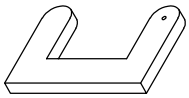 Woodleg-2pcs Jambe-de-bois-2pcs	48  Support shelf board-1pc Planche de support pour étagère -1pc	

Hardware List (Box 3)
Liste du matériel

A 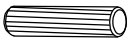 Ø8 x 30 mm Wood dowel-50pcs Cheville en bois	B  Ø1/4" x 120 mm Hex-Head bolts-4pcs Boulons à tête hexagonale	C  D13 x Ø1/4" x 100 mm Hex-Head bolts-16pcs Boulons à tête hexagonale
D  D13 x Ø1/4" x 70 mm Hex-Head bolts-18pcs Boulons à tête hexagonale	E  D13 x Ø1/4" x 60 mm Hex-Head bolts-10pcs Boulons à tête hexagonale	F  D13 x Ø1/4" x 50 mm Hex-Head bolts-2pcs Boulons à tête hexagonale
FE  D13 x Ø1/4" x 40 mm Hex-Head bolts-2pcs Boulons à tête hexagonale	G 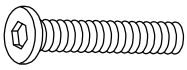 Ø1/3" x 40 mm Hex-Head bolts 2pcs Boulons à tête hexagonale	H  Ø1/4" x 12 mm Horizontal-Hole bolts-50pcs Boulons à trou horizontal
I 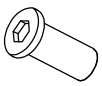 D13 x Ø1/4" x 15 mm T-nut-2pcs Écrou en T	J  Ø20 / Ø6 x 2 mm Washer-2pcs Rondelle	K  D13 x Ø1/4" x 40 mm Screws-24pcs Vis-24pcs
T  D13 x Ø1/4" x 30 mm Screws-2pcs Vis-2pcs	M 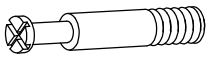 Cam Bolt-18pcs Boulon à came	N  Cam Lock-18pcs Serrure à came
O 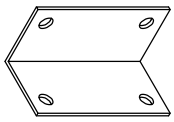 Angle Metal-16pcs Angle en métal-16pcs	P 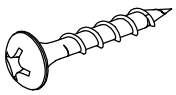 M3.5 x 15 mm Wood Screws-96pcs Vis à bois	Q 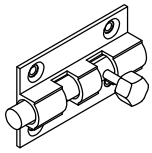 Barrel Bolt Latch - 2pcs Loquet à pêne cylindrique
Z 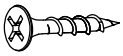 M3 x 12 mm Wood Screws-8pcs Vis à bois	X  M4 x 50 mm Wood Screws-10pcs Vis à bois	V 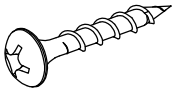 M4 x 30 mm Wood Screws-16pcs Vis à bois

Hardware List (Box 3)
Liste du matériel

FA  M4 x 20 mm Wood Screws-48pcs Vis à bois	W 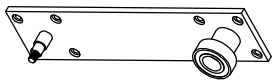 Metal straight link-2pcs Maillon droit en métal	S 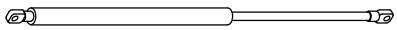 Piston -2pcs Piston -2pcs
L 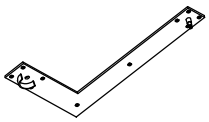 Metal Corner Left-1pc Coin métallique gauche-1pc	R 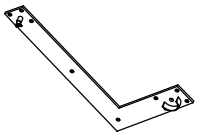 Metal Corner Right-1pc Coin métallique droit-1pc	Y 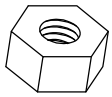 Nut / Noix -4pcs
IA  Handle - 2pcs Poignée	HA  Ø1/6" x 25 mm Bolt -4pcs Boulon-4pcs	DA 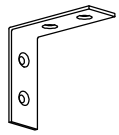 Angle Metal - 3pcs Angle en métal- 3pcs
SA  M5 x 50 mm Screws-6pcs Vis-6pcs	YS 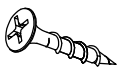 M4 x 15 mm Wood Screws-6pcs Vis à bois-6pcs	KX  M4x10x1 mm Washer - Rondelle -2pcs
KA  Allen Key-4pcs Clé Allen	TS  D13 x Ø1/4" x 70 mm Screws-4pcs Vis-4pcs	BA 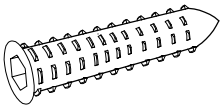 Plastic wall plug - 6pcs Cheville en plastique - 6pcs

Please sort out all parts before you begin to assembly the item. This is to make sure you always use the correct part.

Veuillez trier toutes les pièces avant de commencer à assembler l'article. Cela permet de s'assurer que vous utilisez toujours la bonne pièce.

ASSEMBLY TOOLS REQUIRED (NOT INCLUDED)
OUTILS D'ASSEMBLAGE REQUIS (NON INCLUS)

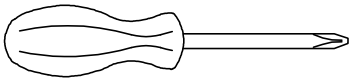

STEP-ÉTAPE-1:

A	C	D	H
2pcs	3pcs	1pc	4pcs

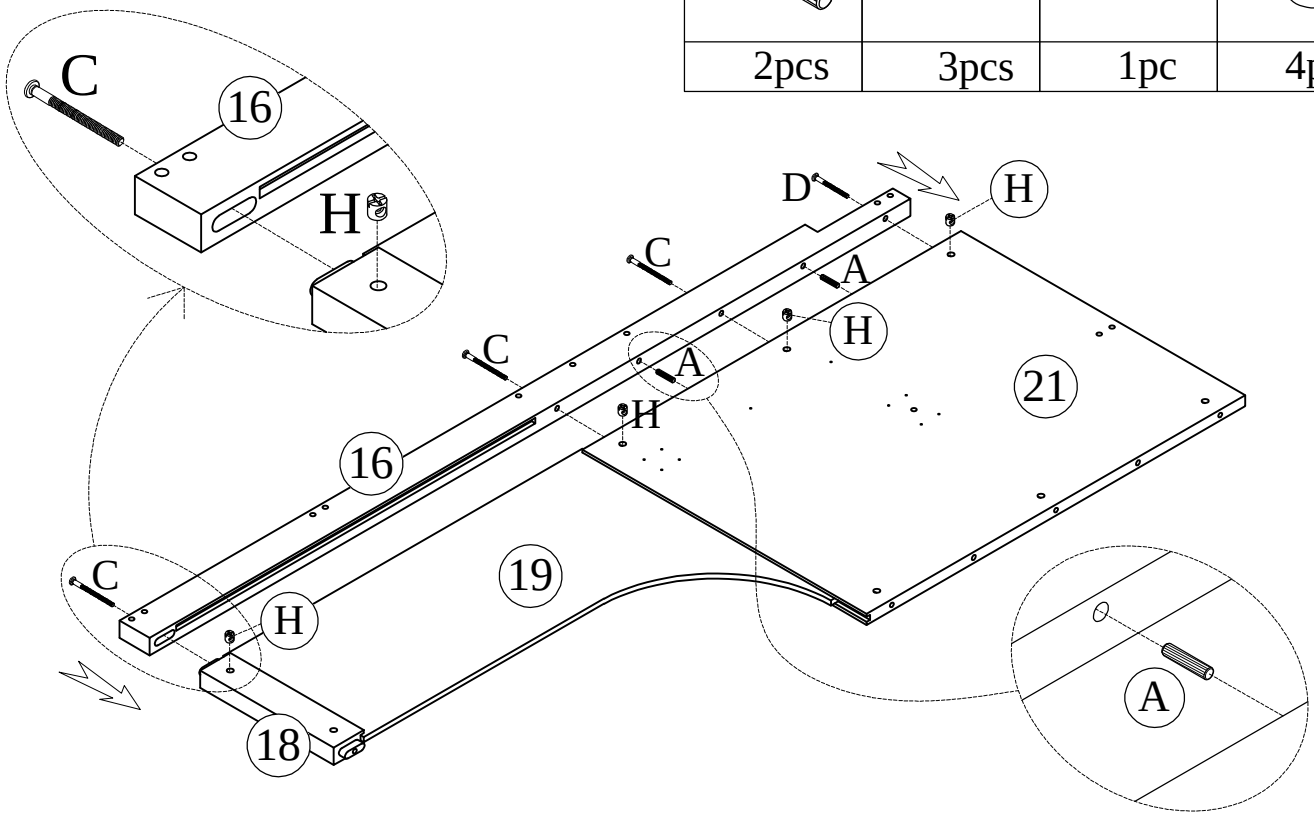

STEP-ÉTAPE-2:

C	H
1pc	1pc

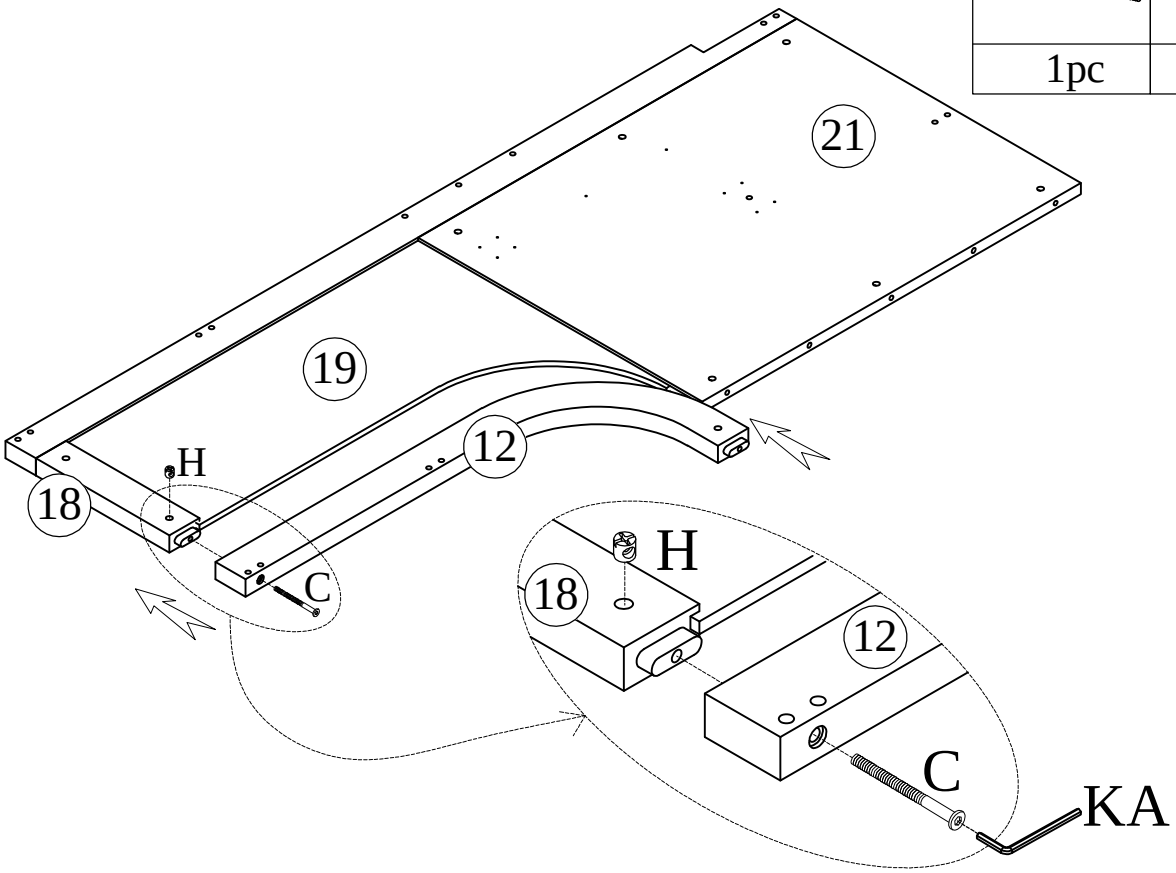

STEP-ÉTAPE-3:

A	C	H
2pcs	4pcs	4pcs

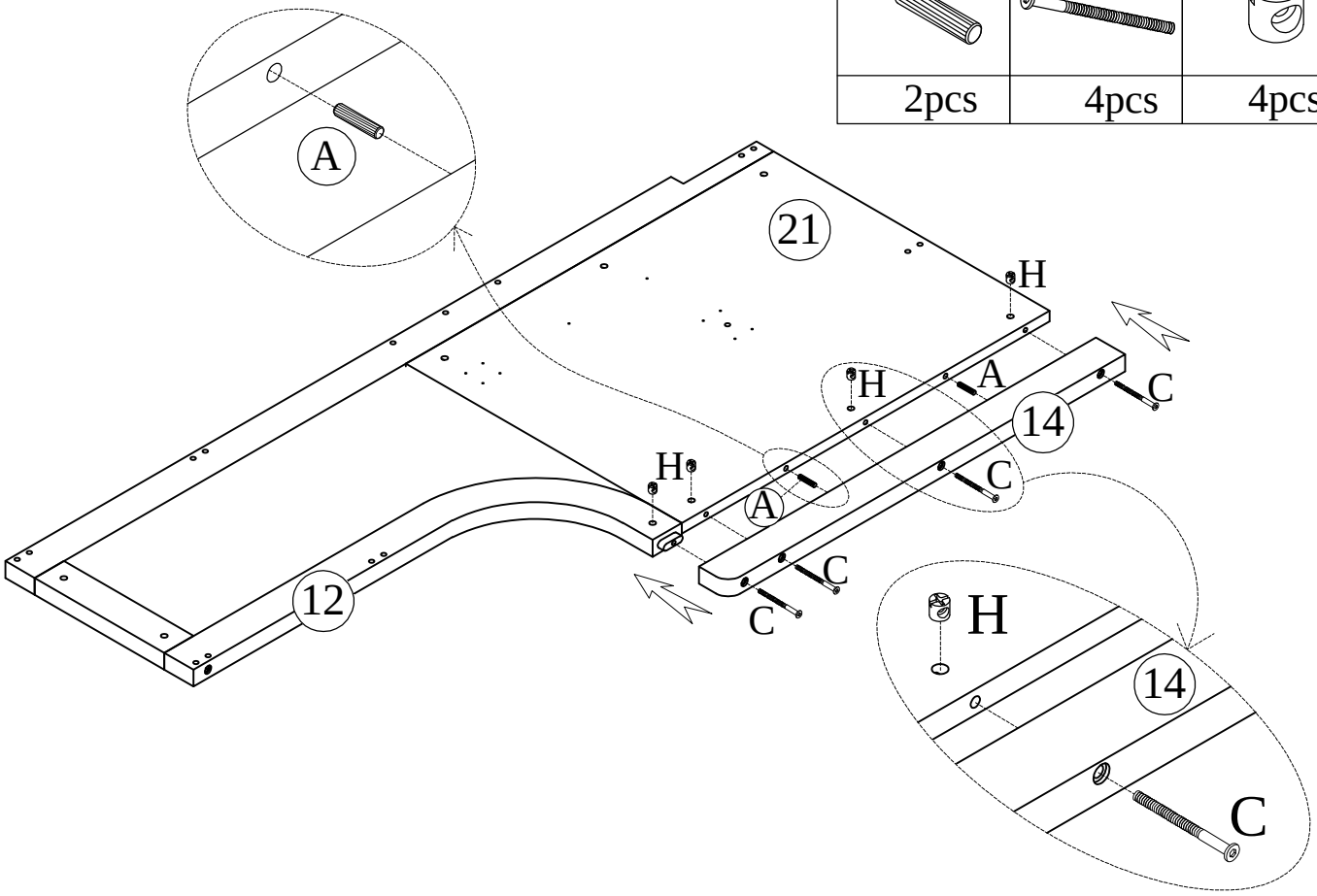

STEP-ÉTAPE-4:

A	C	D	H
2pcs	3pcs	1pc	4pcs

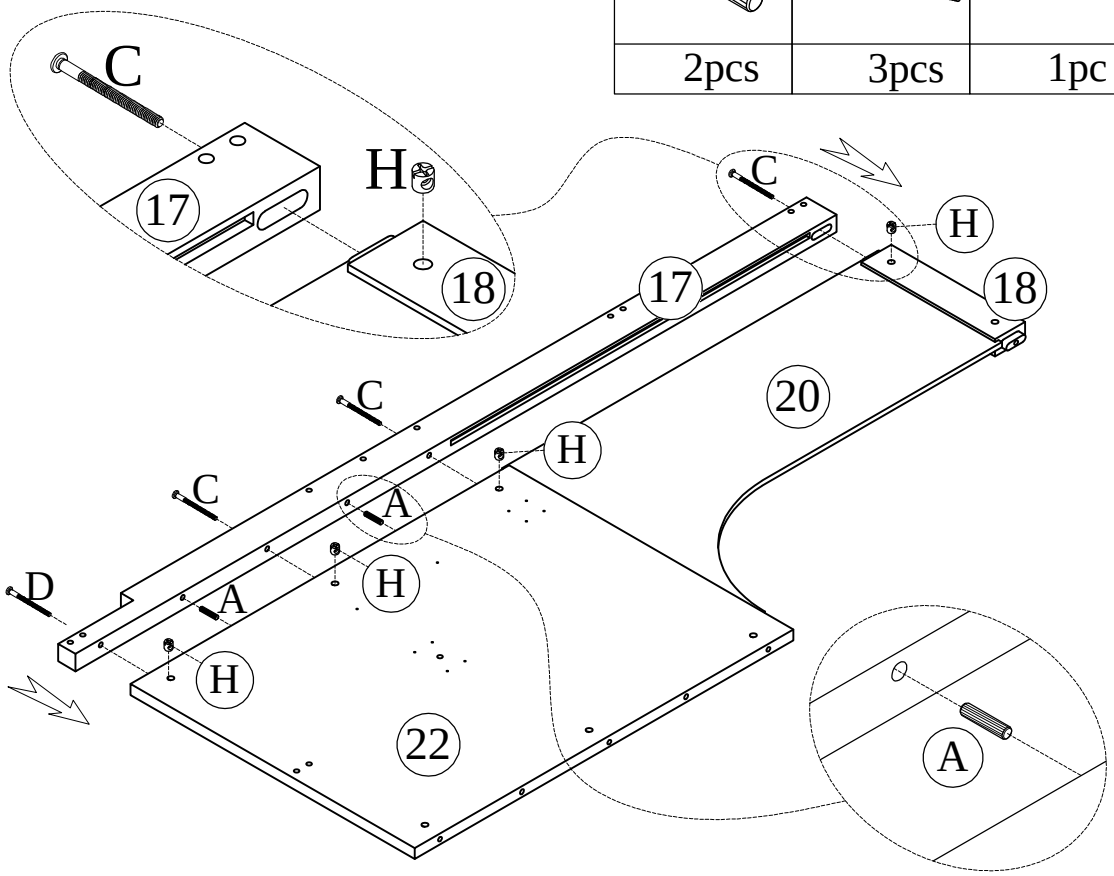

STEP-ÉTAPE-5:

C	H
	
1pc	1pc

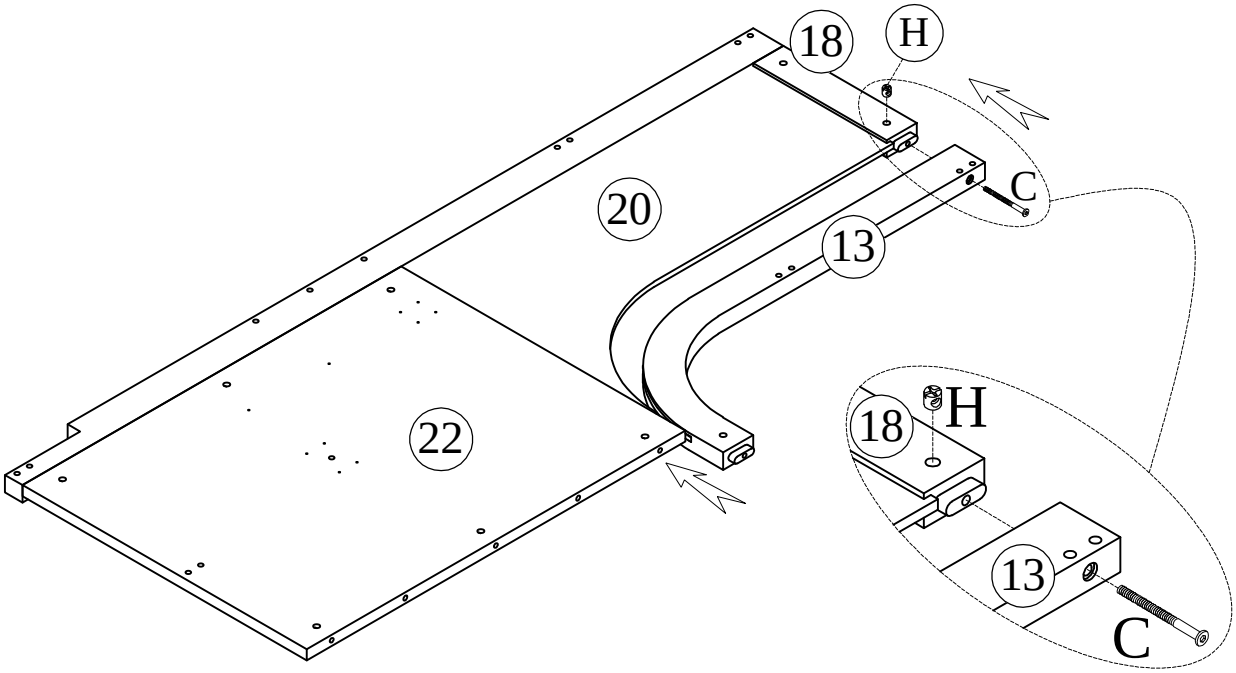

STEP-ÉTAPE-6:

A	C	H
		
2pcs	4pcs	4pcs

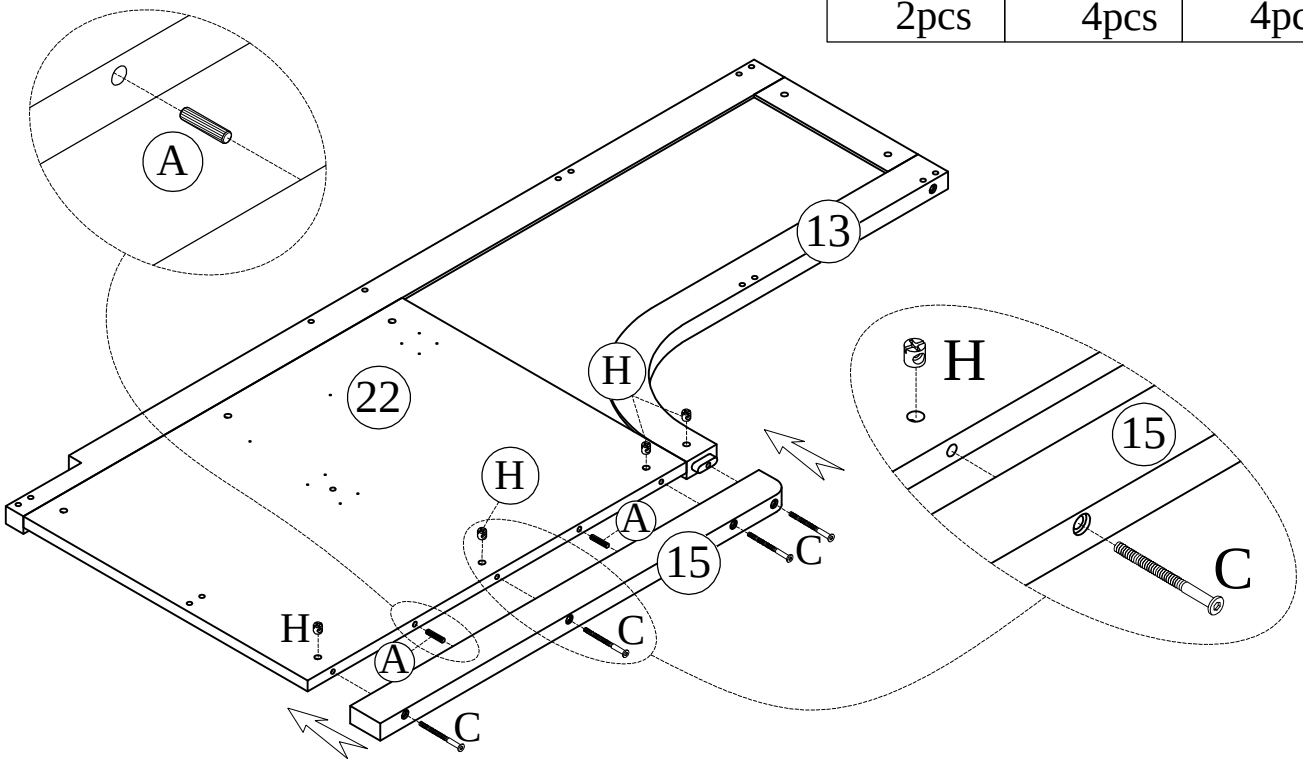

STEP-ÉTAPE-7:

T	A
	
2pcs	2pcs

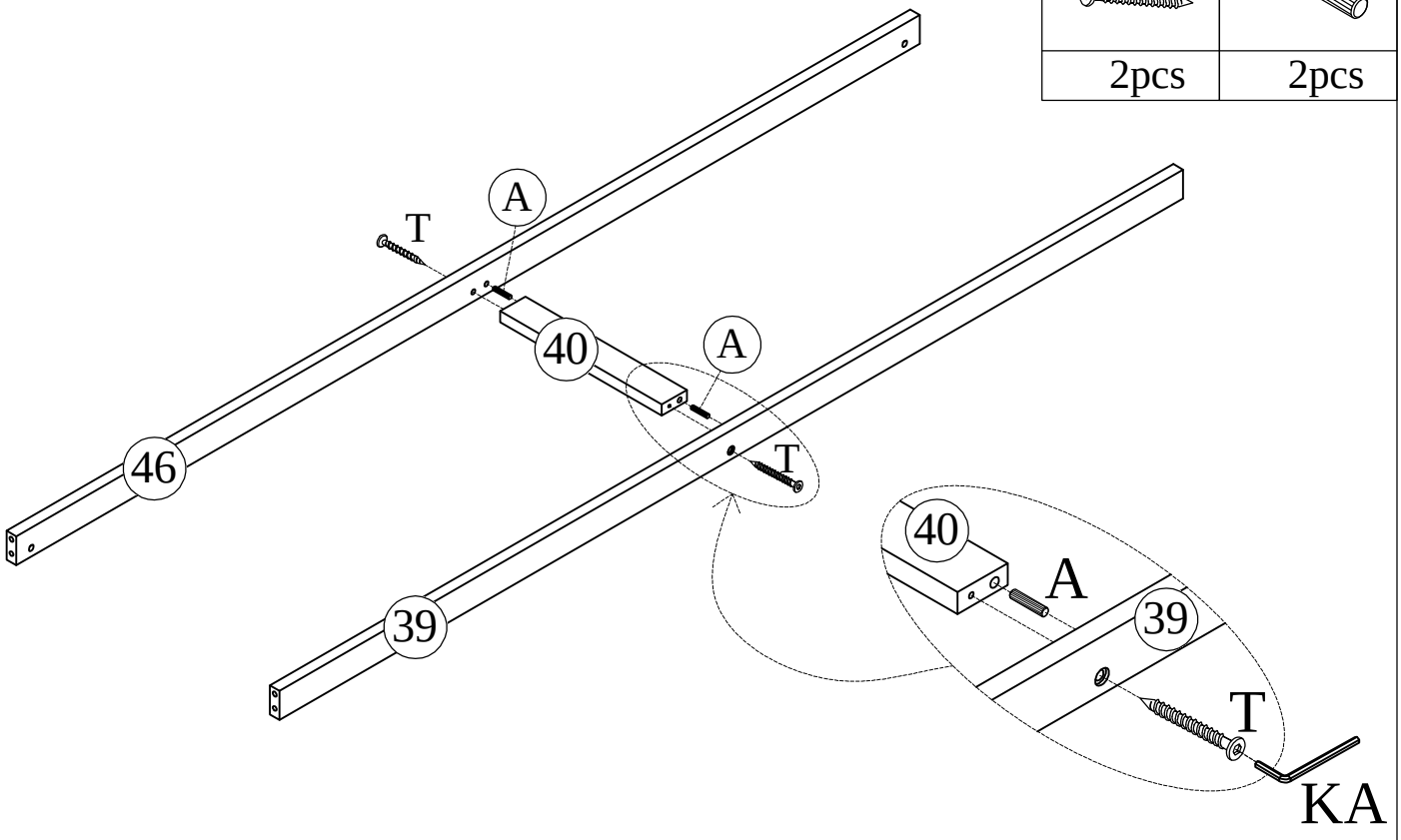

STEP-ÉTAPE-8:

A

4pcs

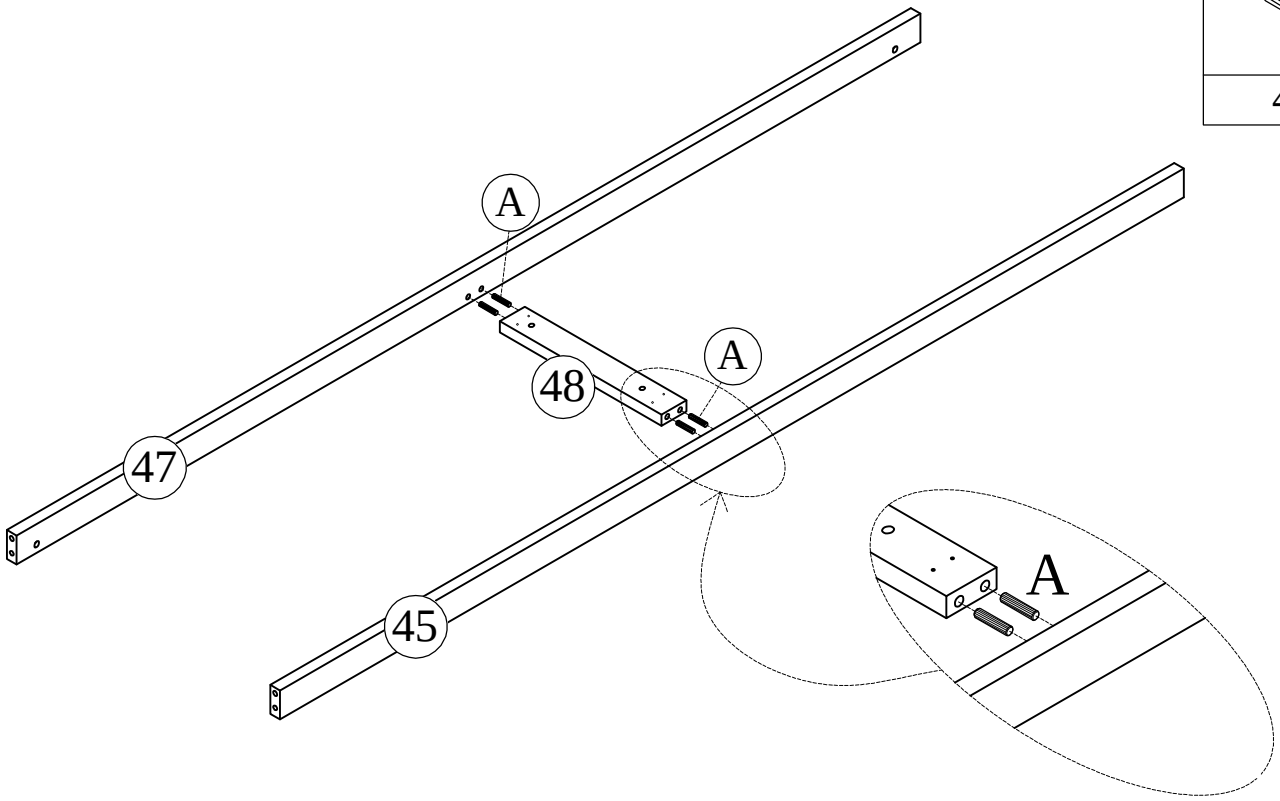

STEP-ÉTAPE-9:

P	O
8pcs	2pcs

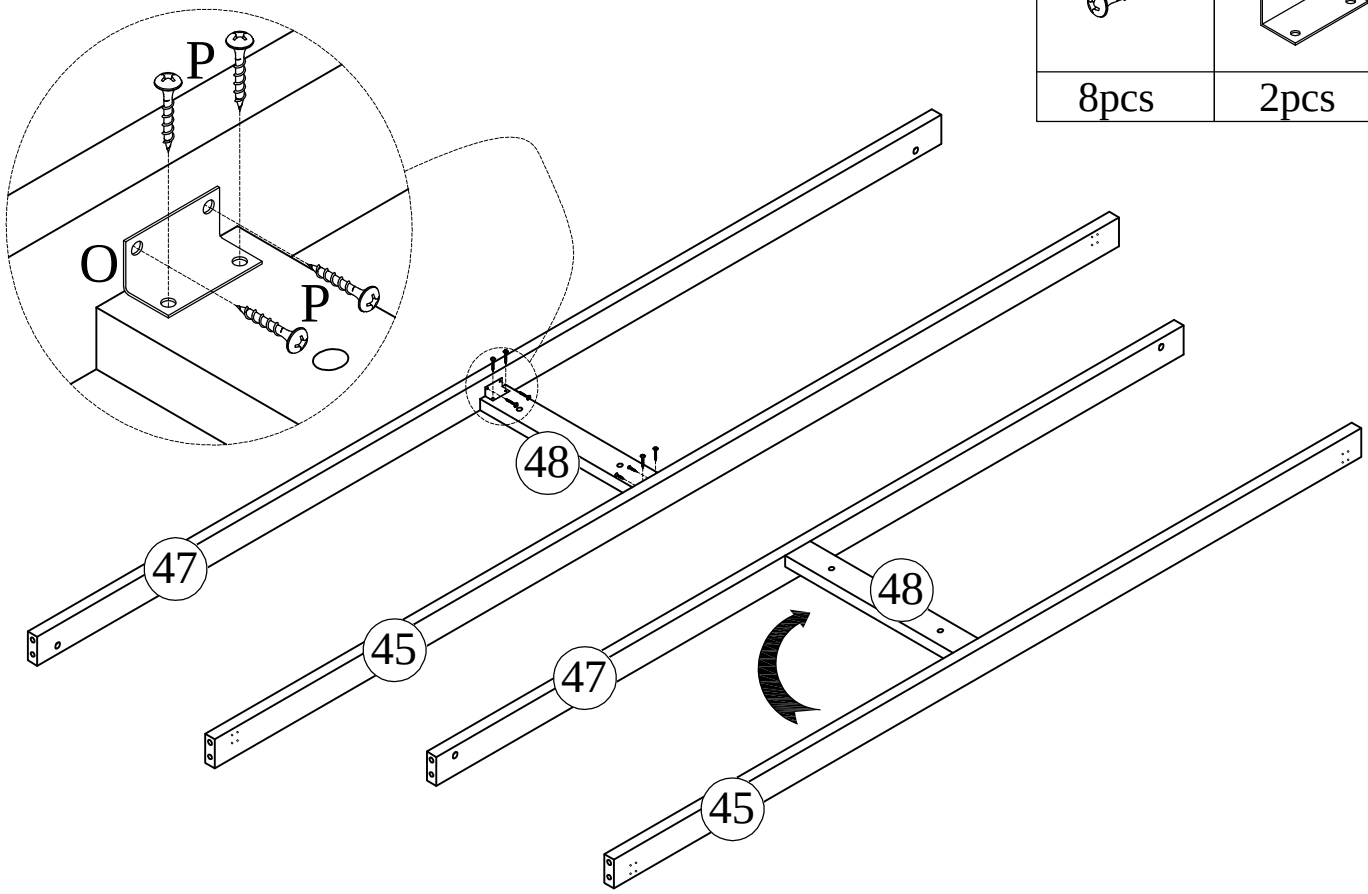

STEP-ÉTAPE-10:

TS	P
4pcs	4pcs

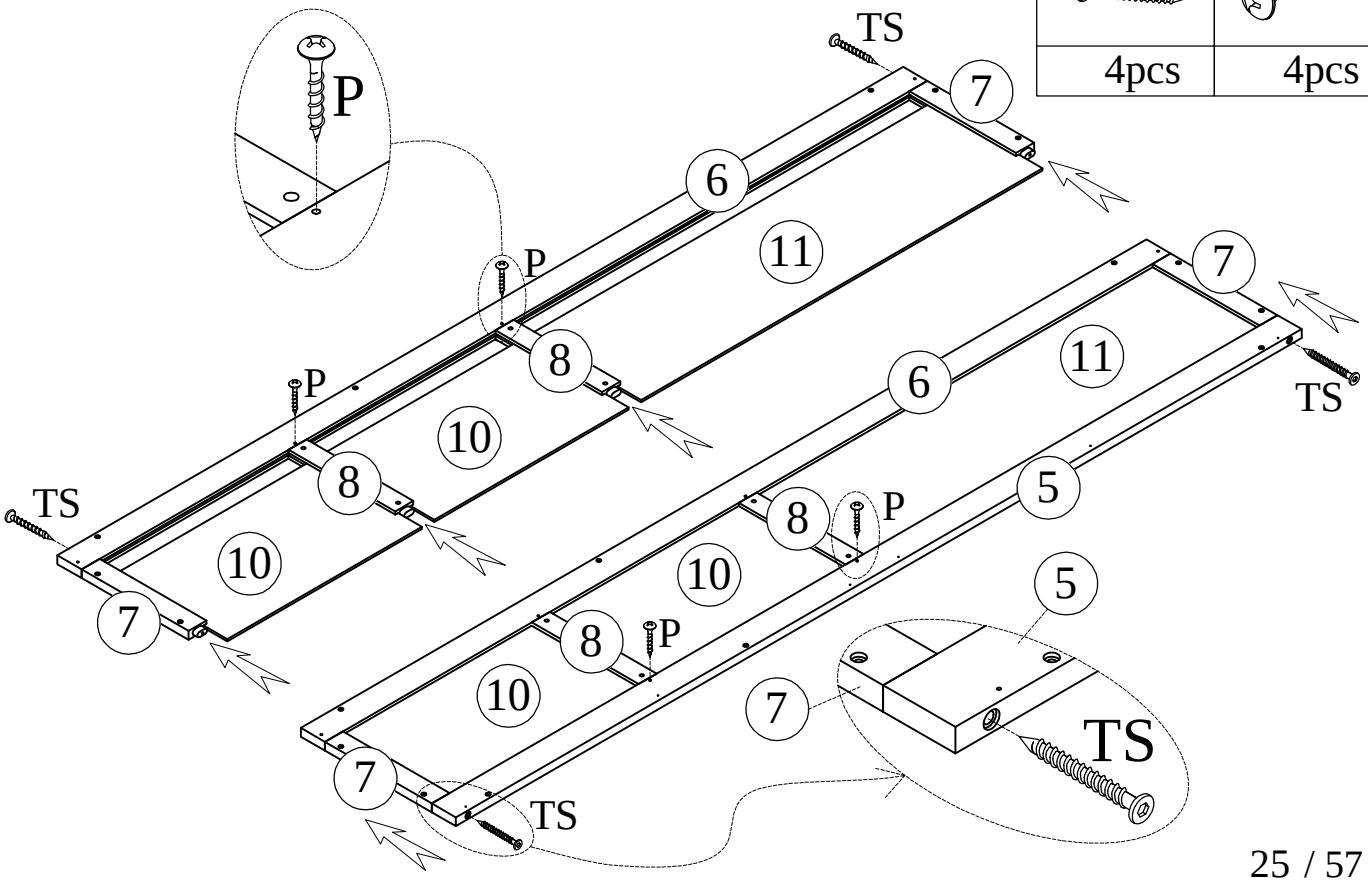

STEP-ÉTAPE-11:

A	E	D	H
14pcs	2pcs	14pc	16pc

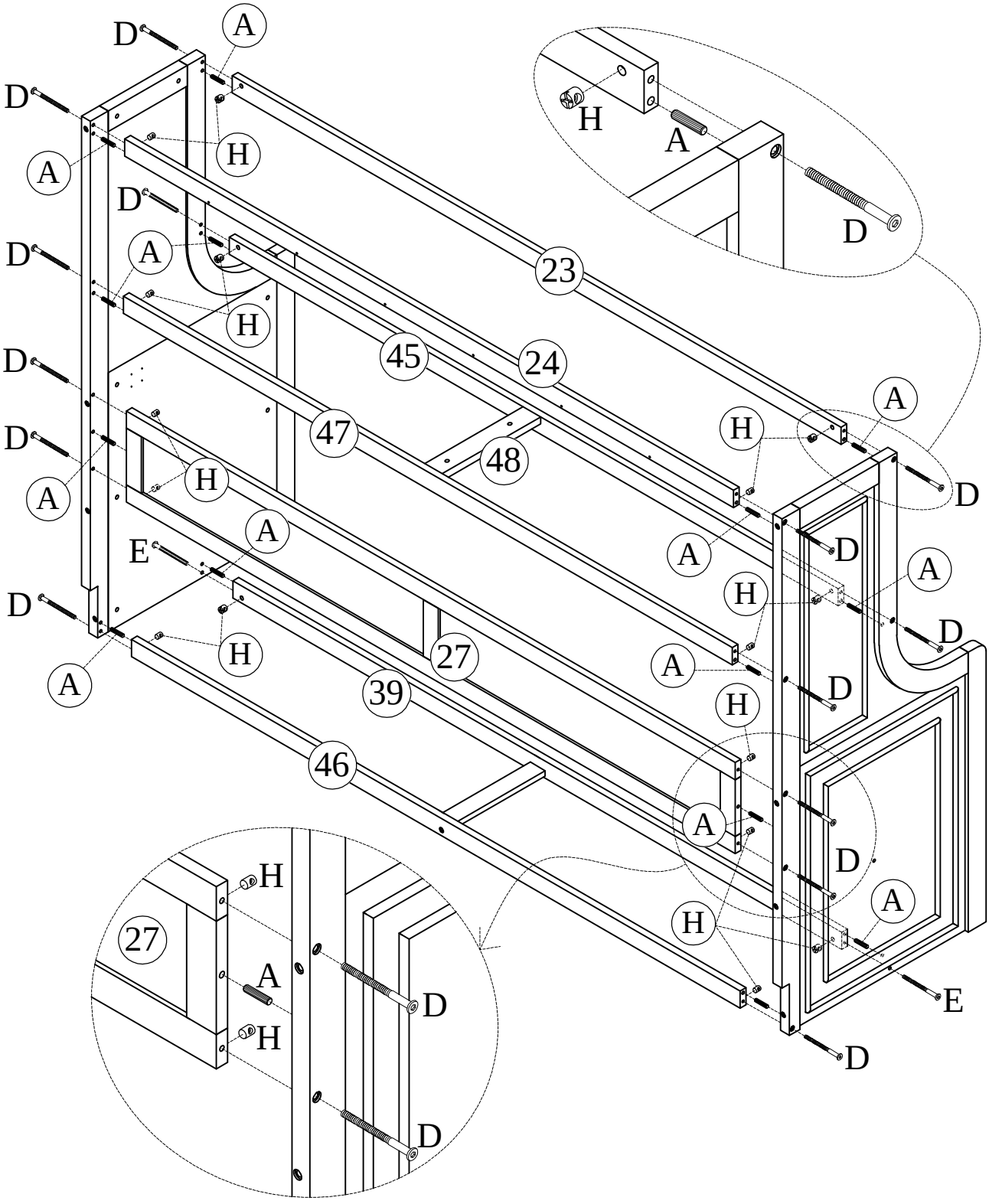

.Requires 4 people to assemble (2 people hold the large cabinet in place and 2 people tilt the bed until accessories are in place)
.Nécessite 4 personnes pour l'assemblage (2 personnes maintiennent la grande armoire en place et 2 personnes inclinent le lit jusqu'à ce que les accessoires soient en place)

STEP-ÉTAPE-12:

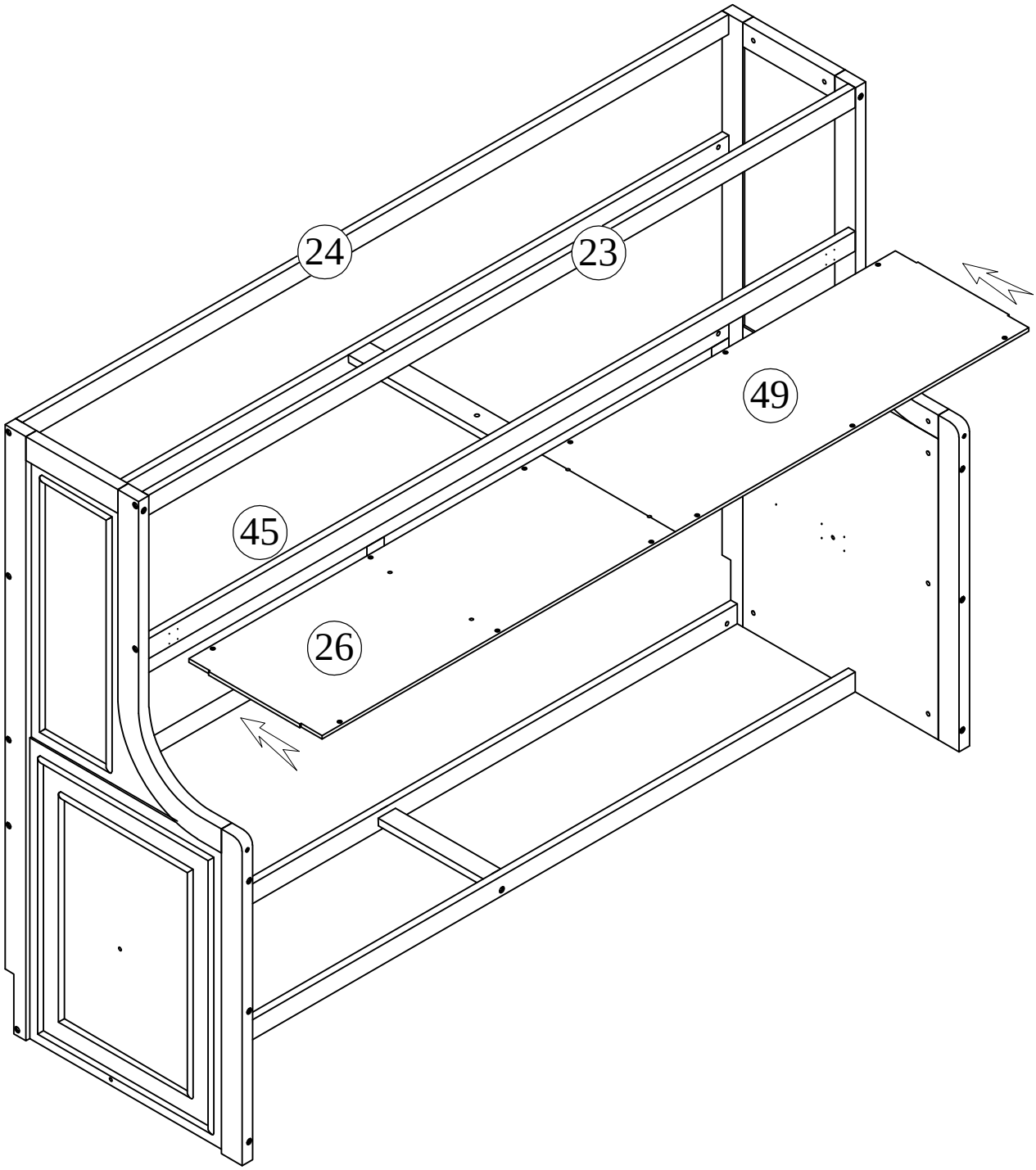

STEP-ÉTAPE-13:

FA

12pcs

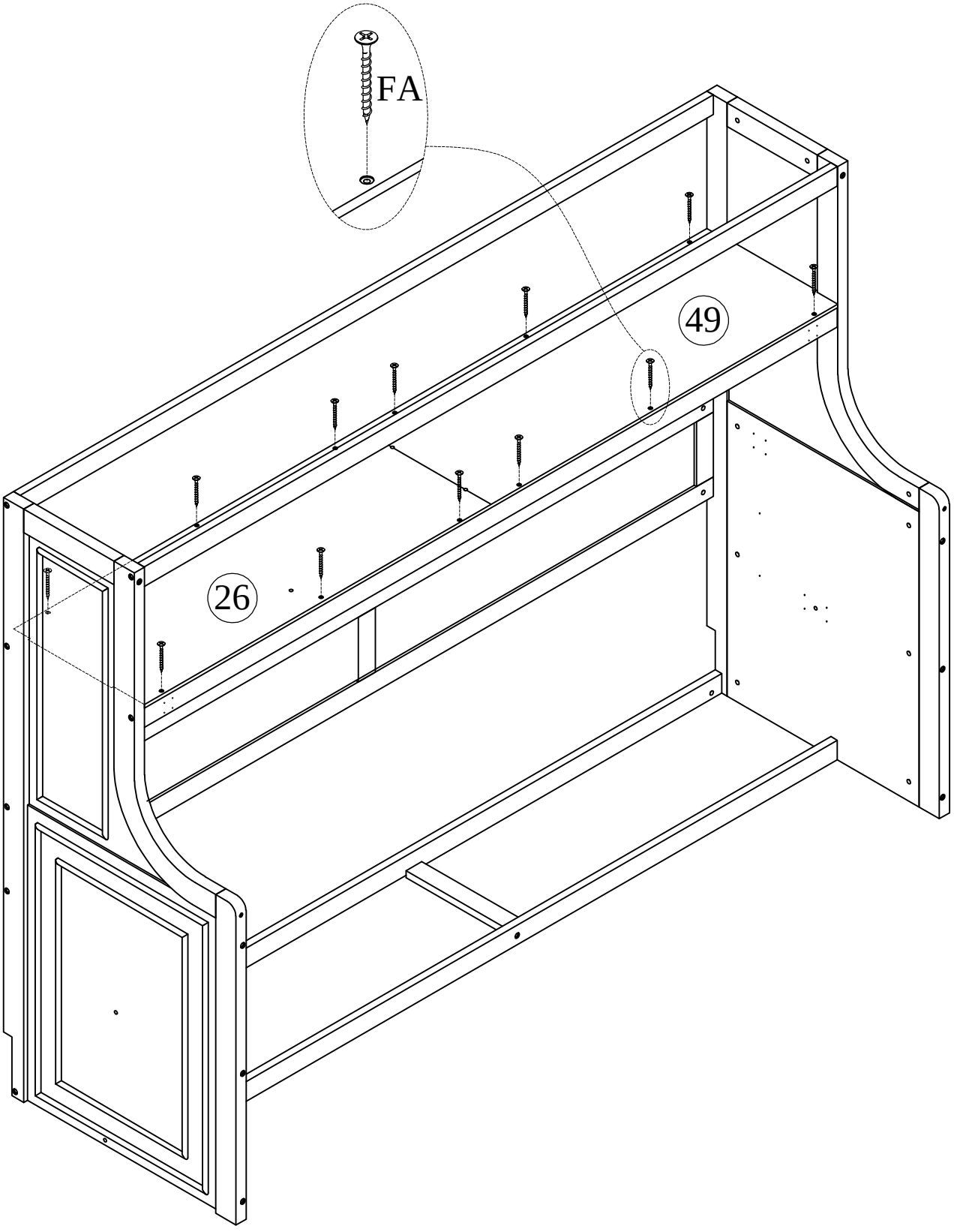

STEP-ÉTAPE-14:

H	D	F
		
4pcs	2pc	2pcs

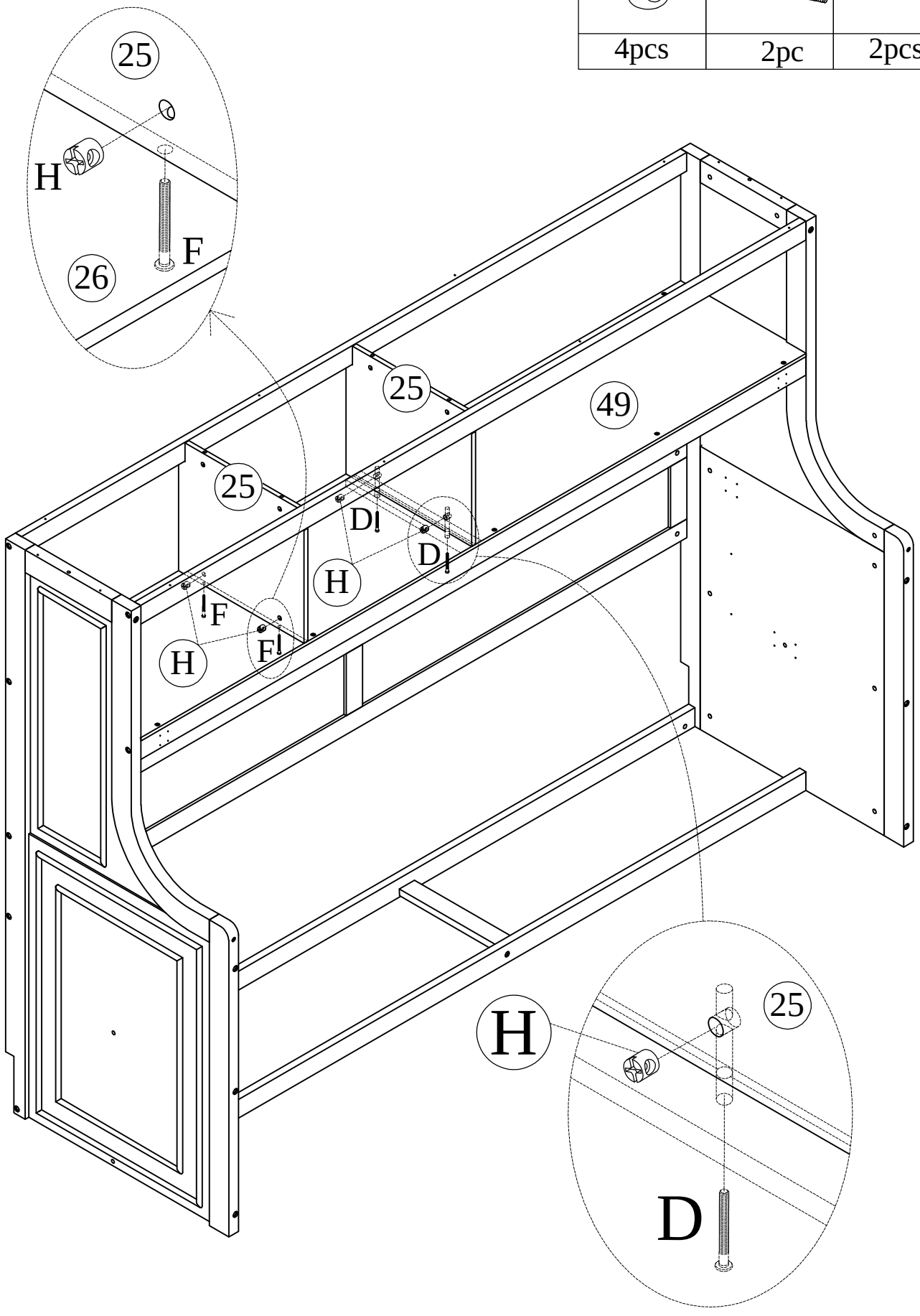

STEP-ÉTAPE-15:

A	K
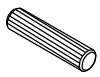	
2pcs	12pcs

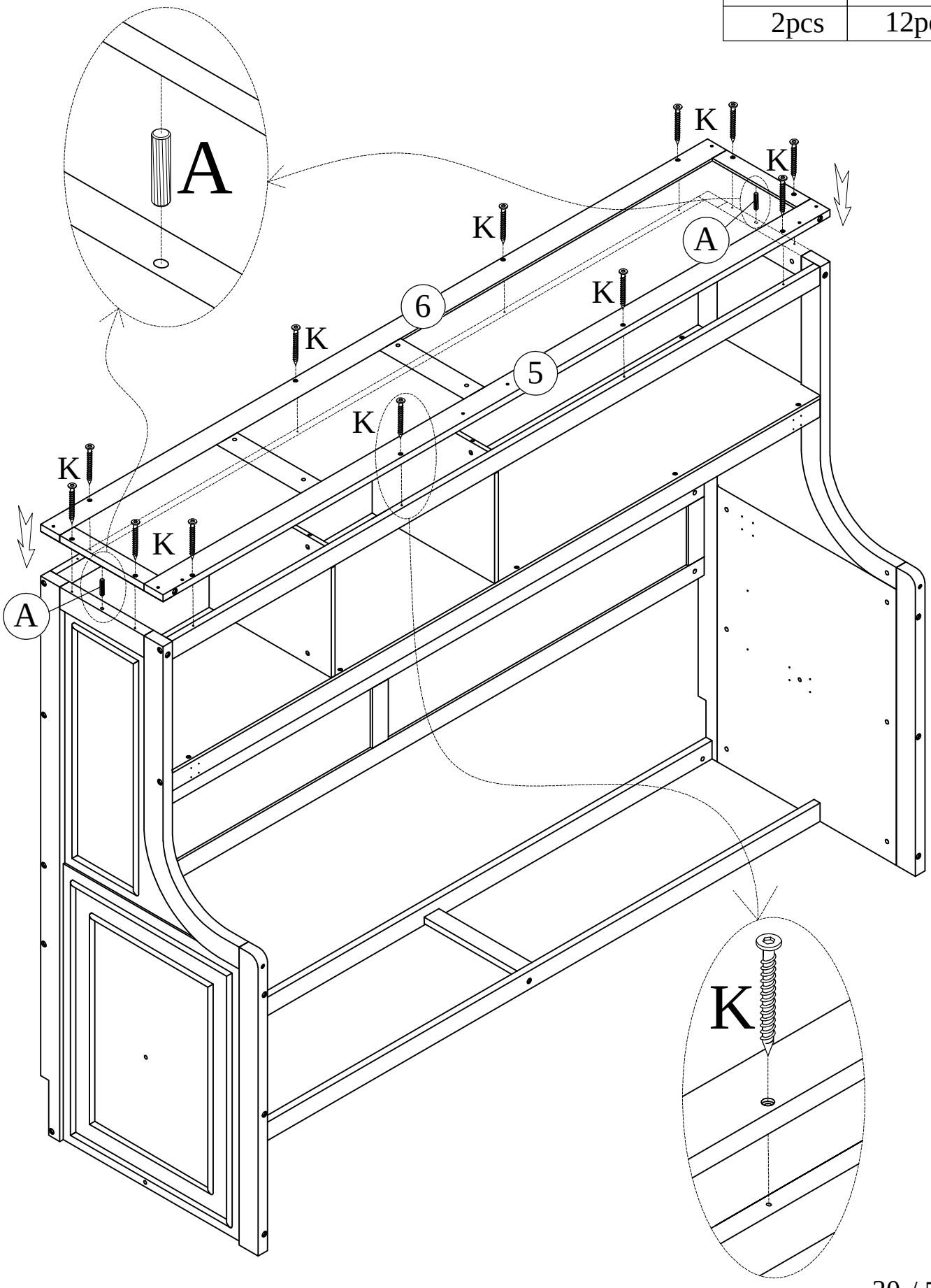

STEP-ÉTAPE-16:

H	E
	
4pcs	4pcs

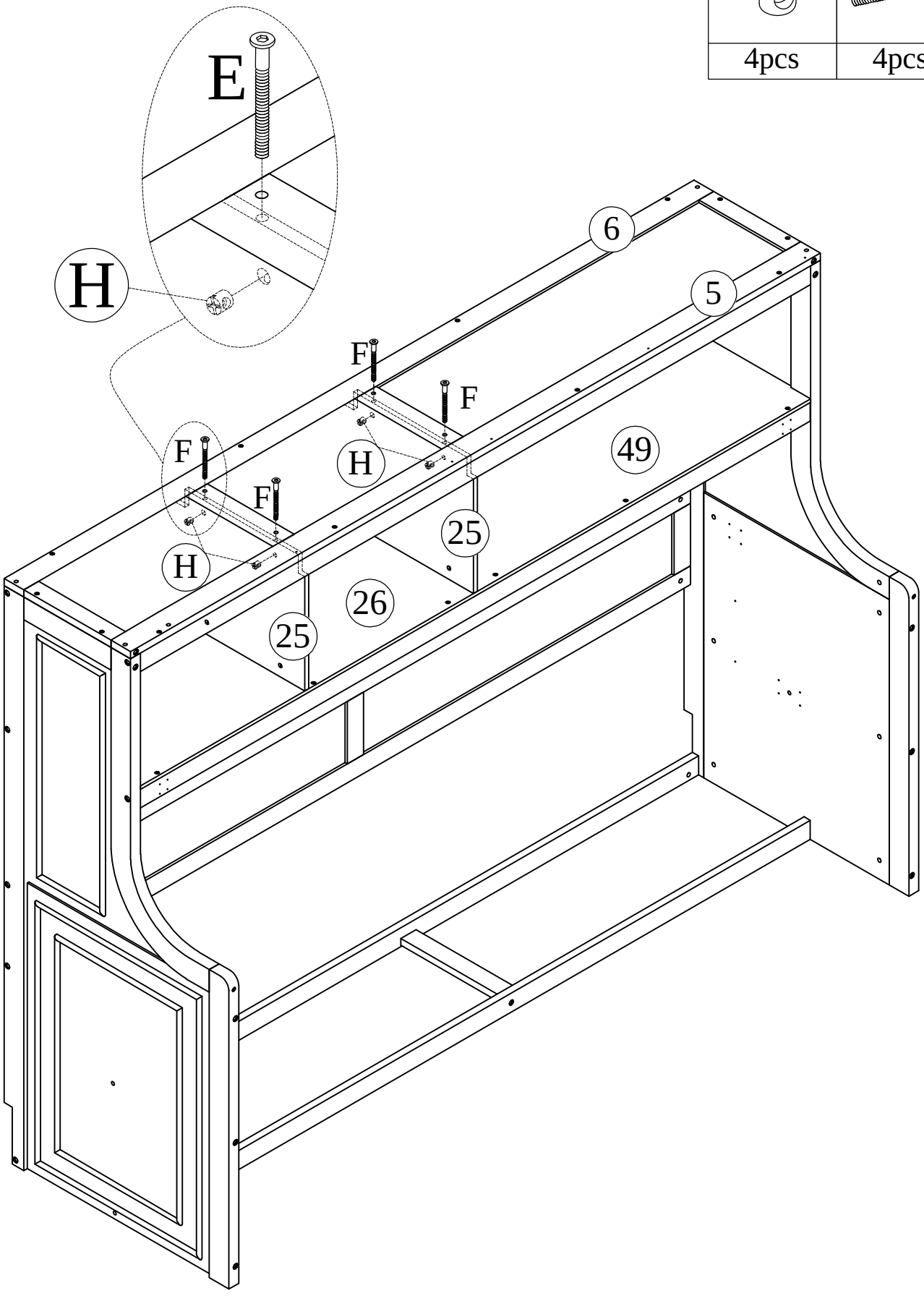

STEP-ÉTAPE-17:

A
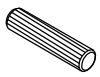
4pcs

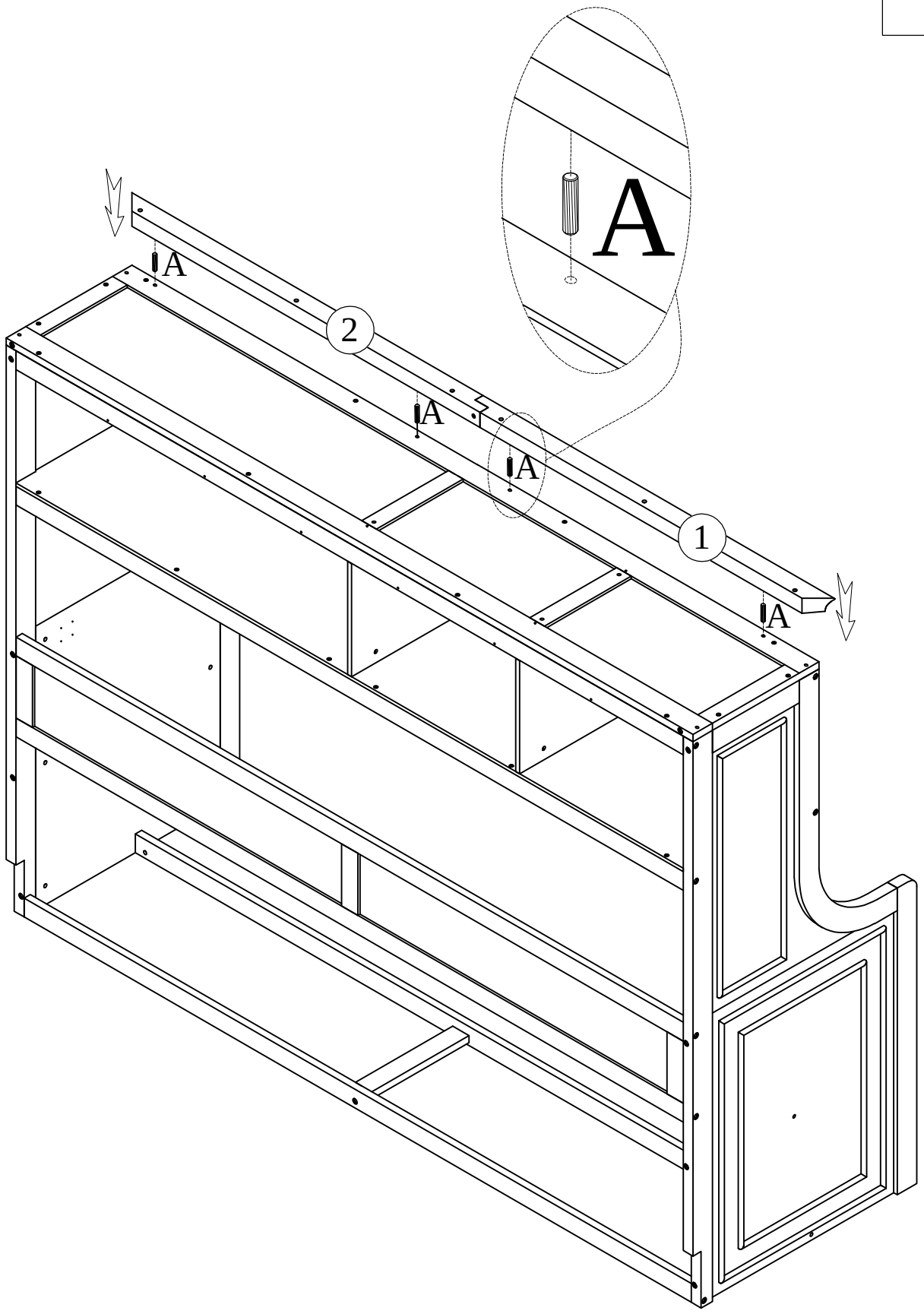

STEP-ÉTAPE-18:

V	X
	
1pc	6pcs

STEP-ÉTAPE-19:

A
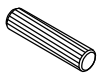
4pcs

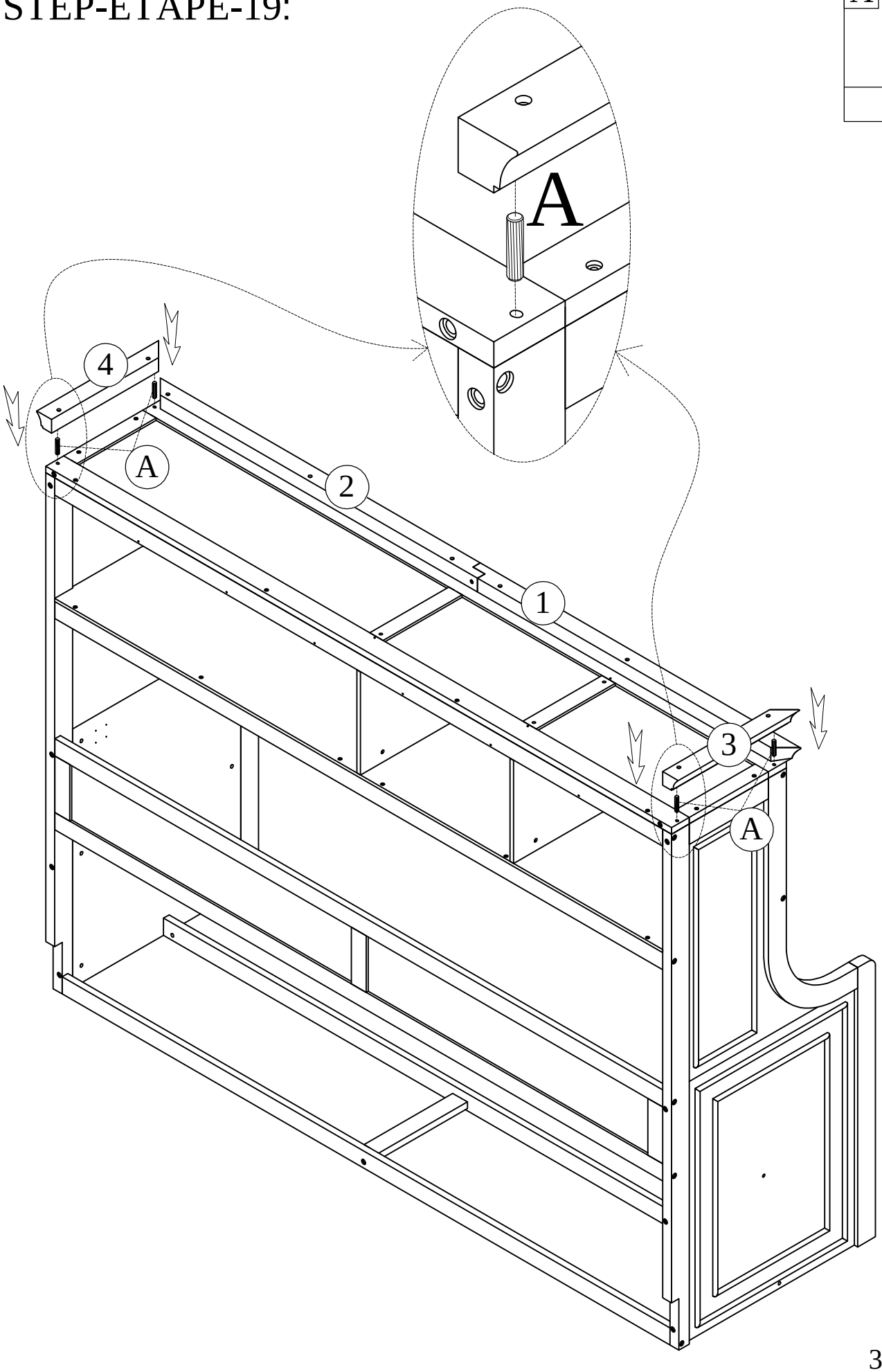

STEP-ÉTAPE-20:

X

4pcs

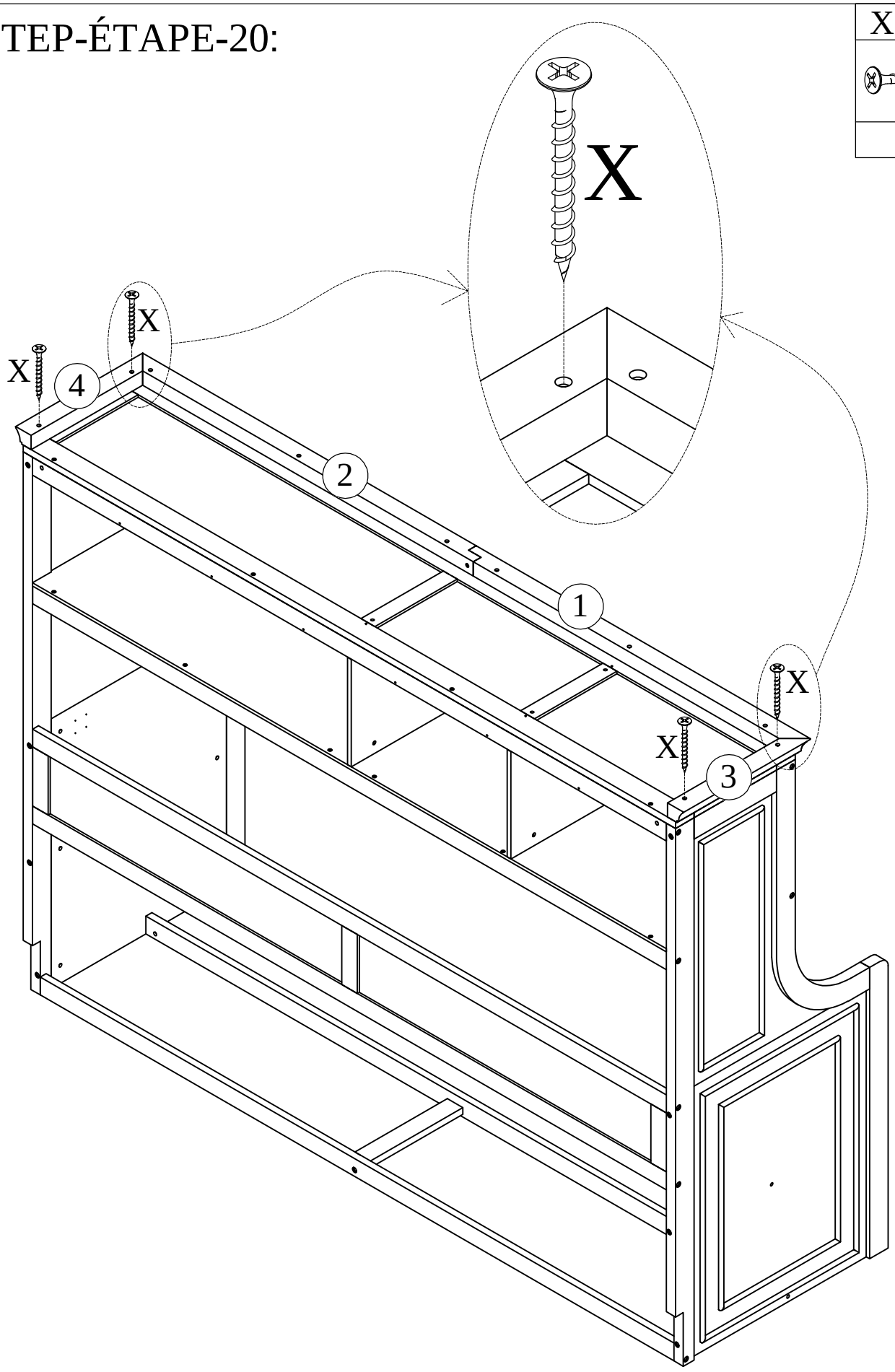

STEP-ÉTAPE-21:

KX	P
2pcs	20pcs

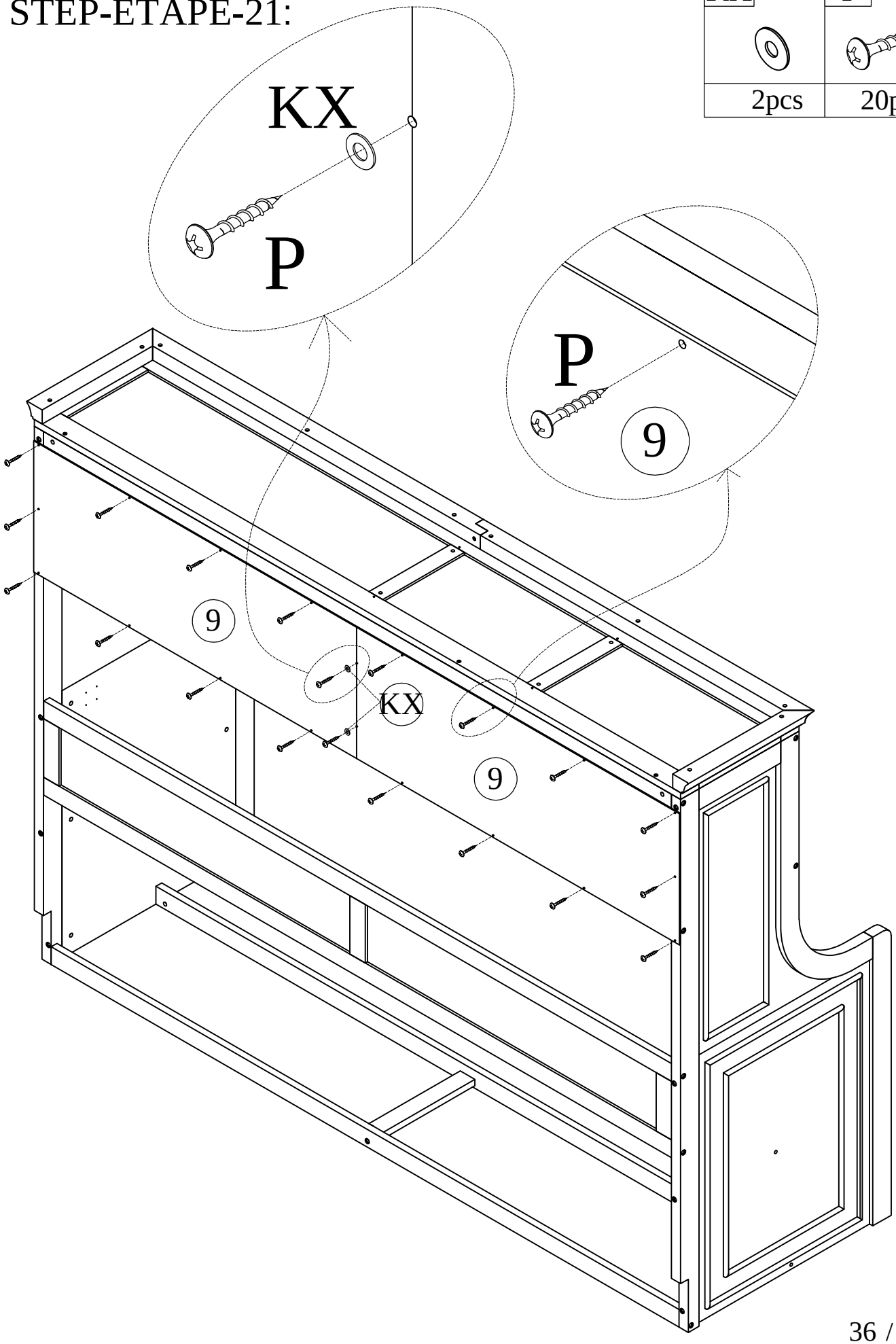

STEP-ÉTAPE-22:

P

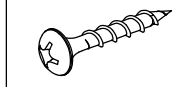

2pcs

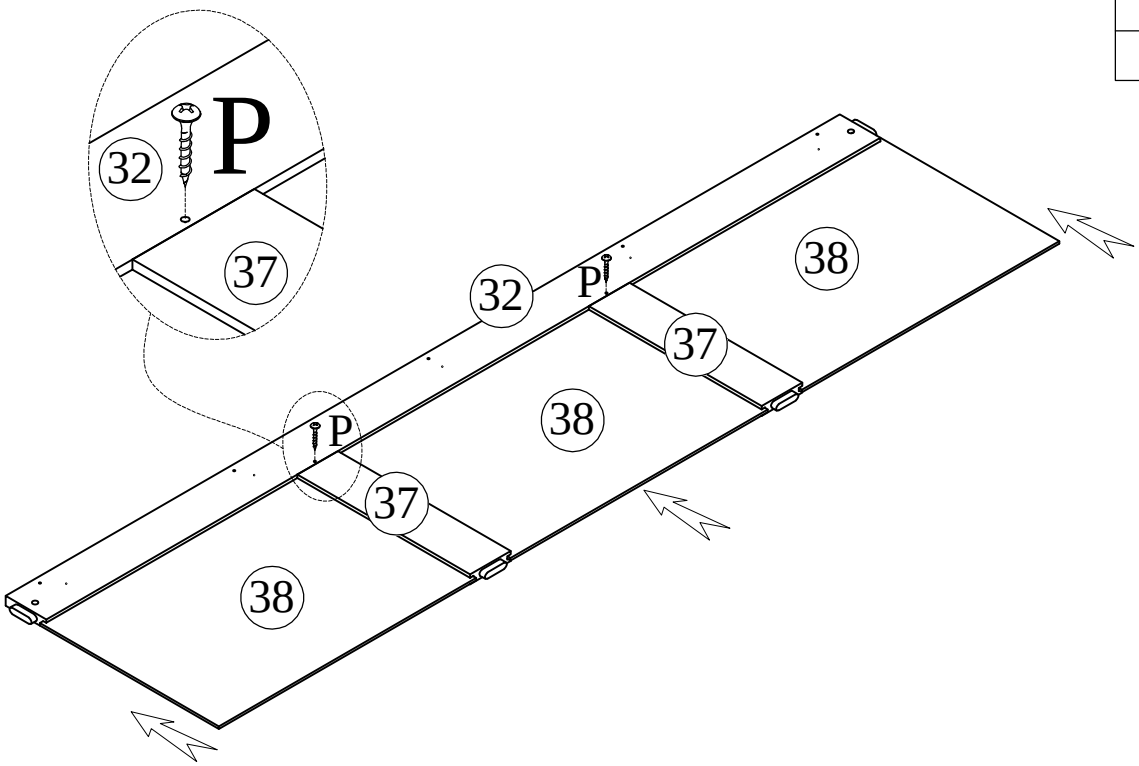

STEP-ÉTAPE-23:

P

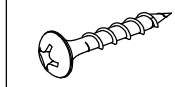

2pcs

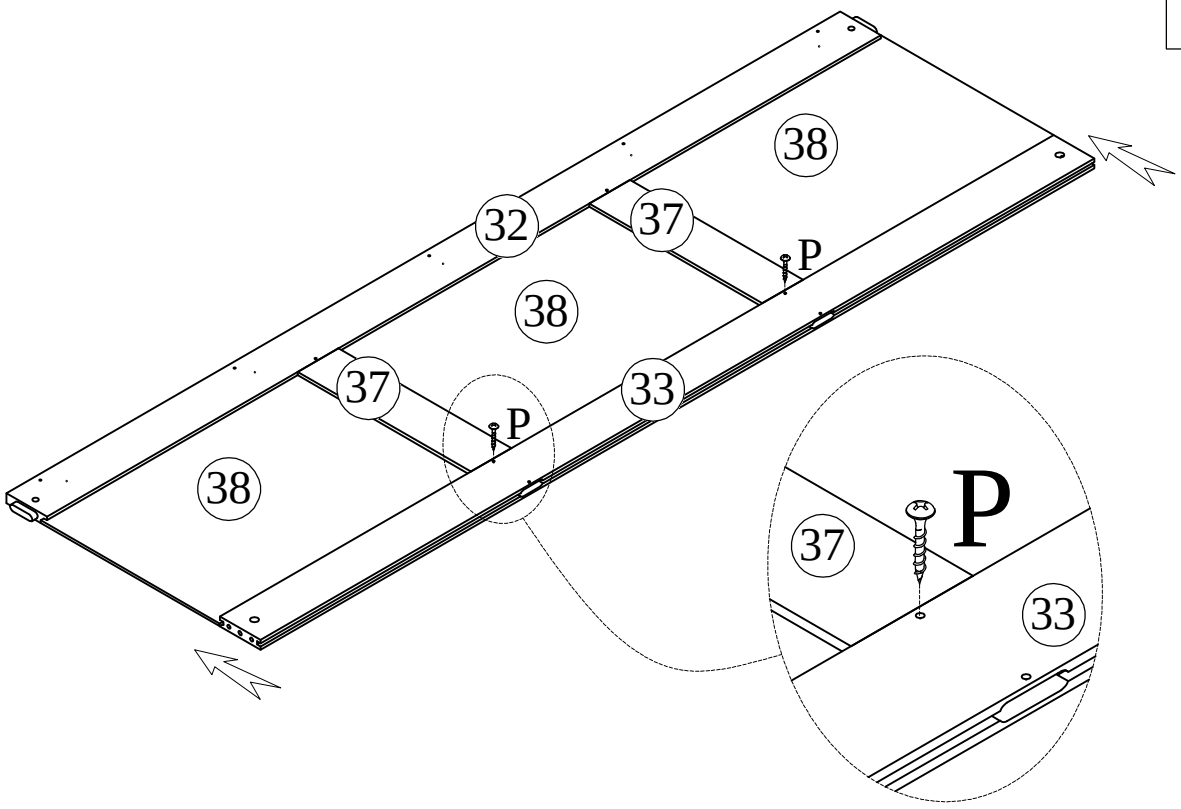

STEP-ÉTAPE-24:

P
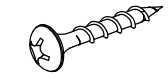
2pcs

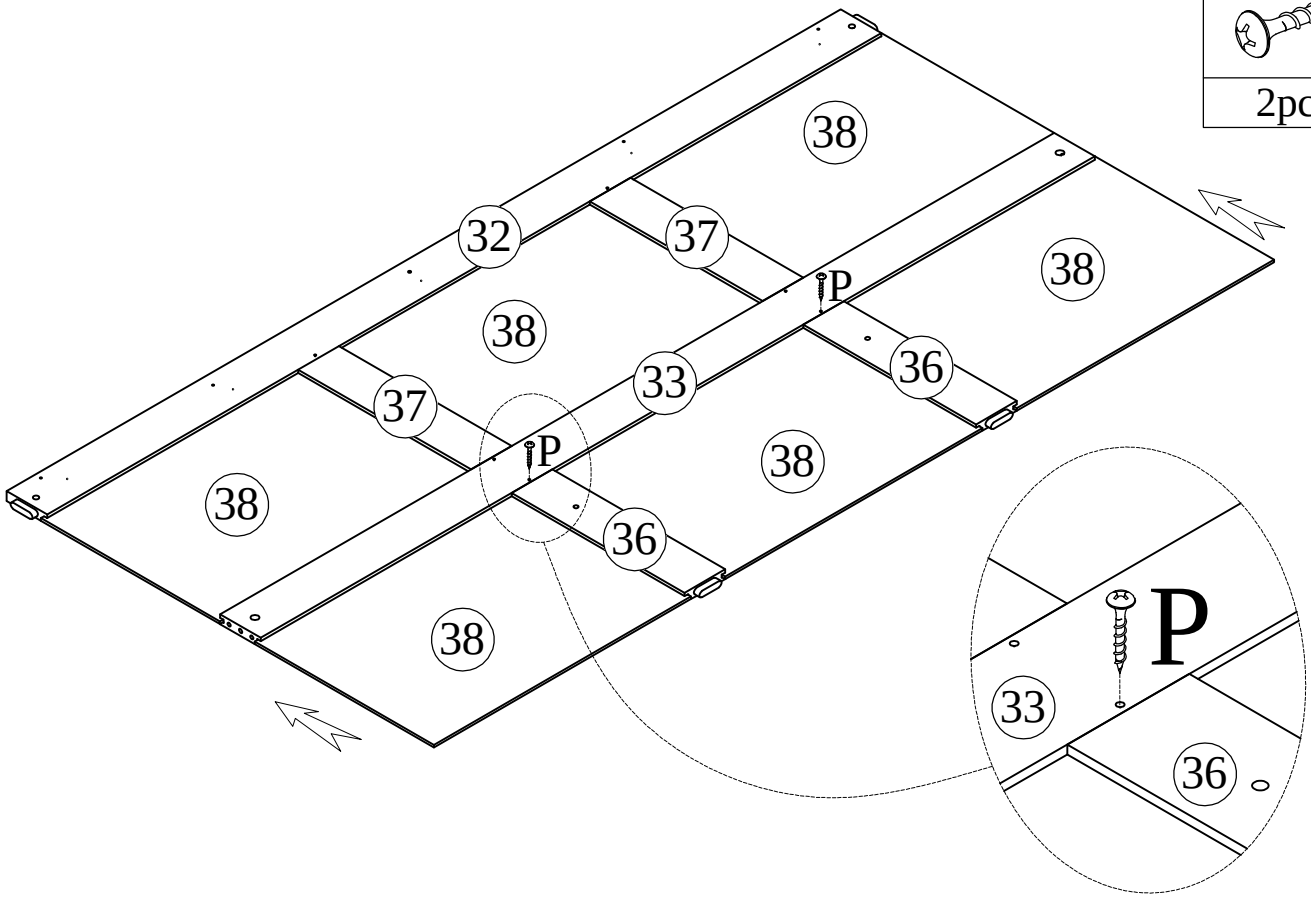

STEP-ÉTAPE-25:

P
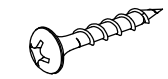
2pcs

STEP-ÉTAPE-26:

M
2pcs

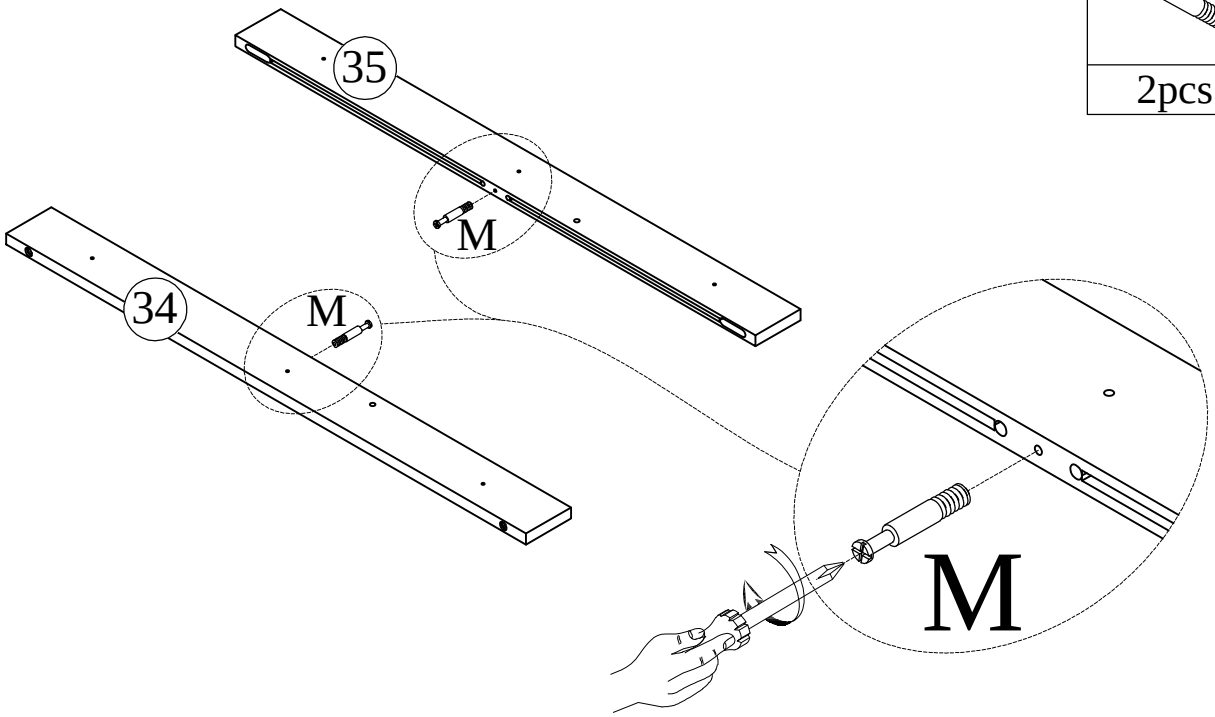

STEP-ÉTAPE-27:

A	H	B	N
4pcs	4pcs	4pcs	2pcs

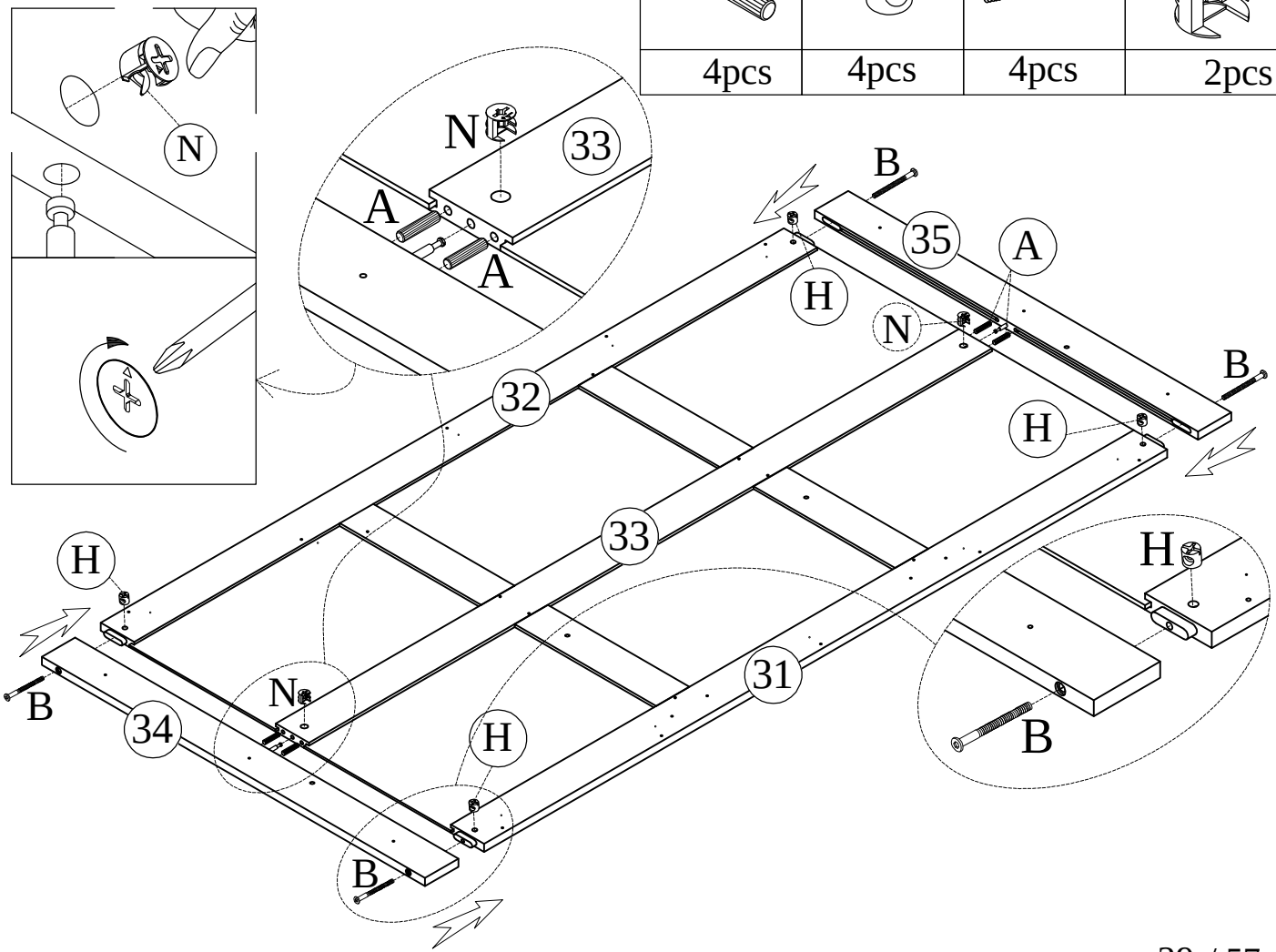

STEP-ÉTAPE-28:

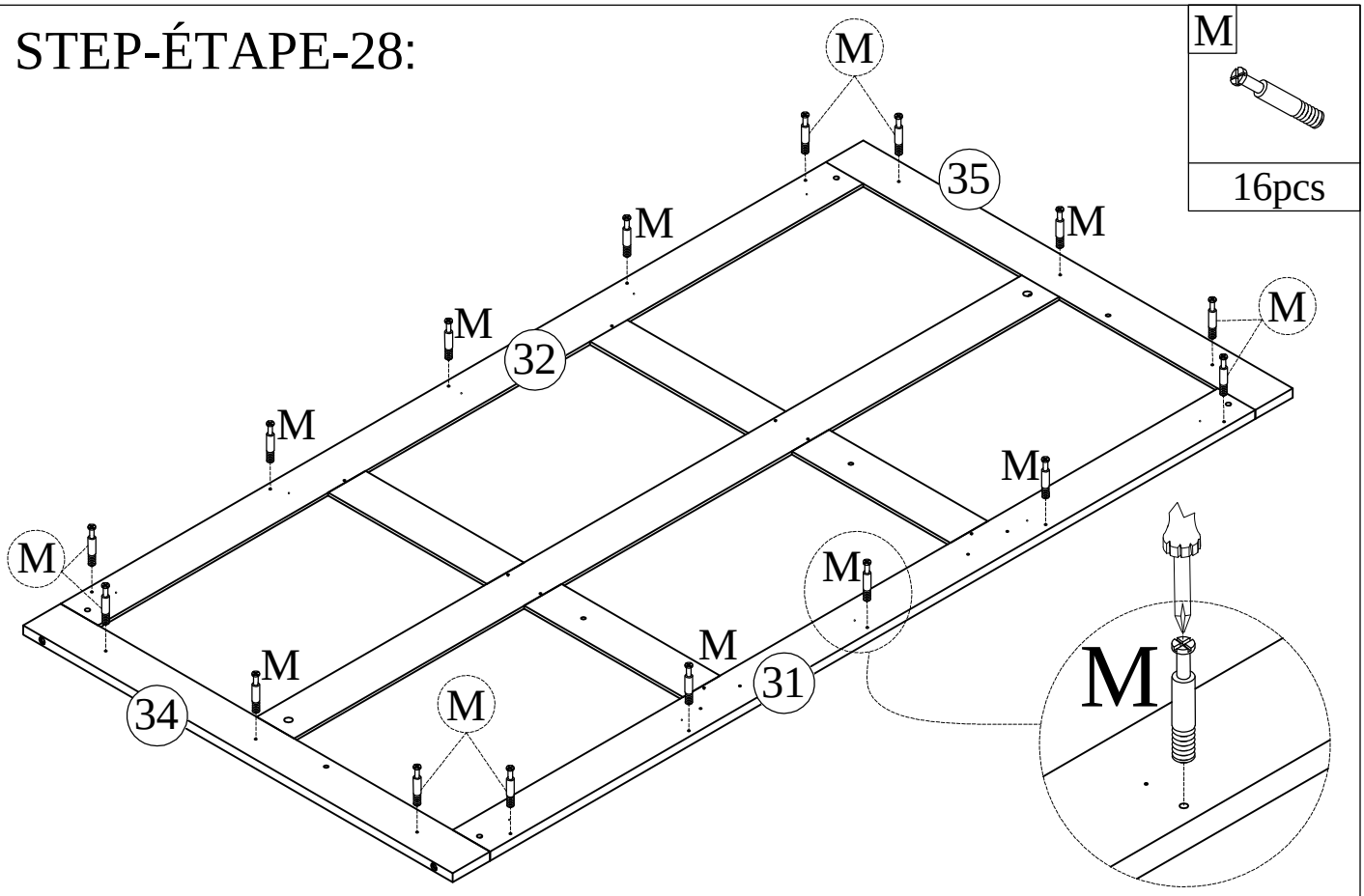

STEP-ÉTAPE-29:

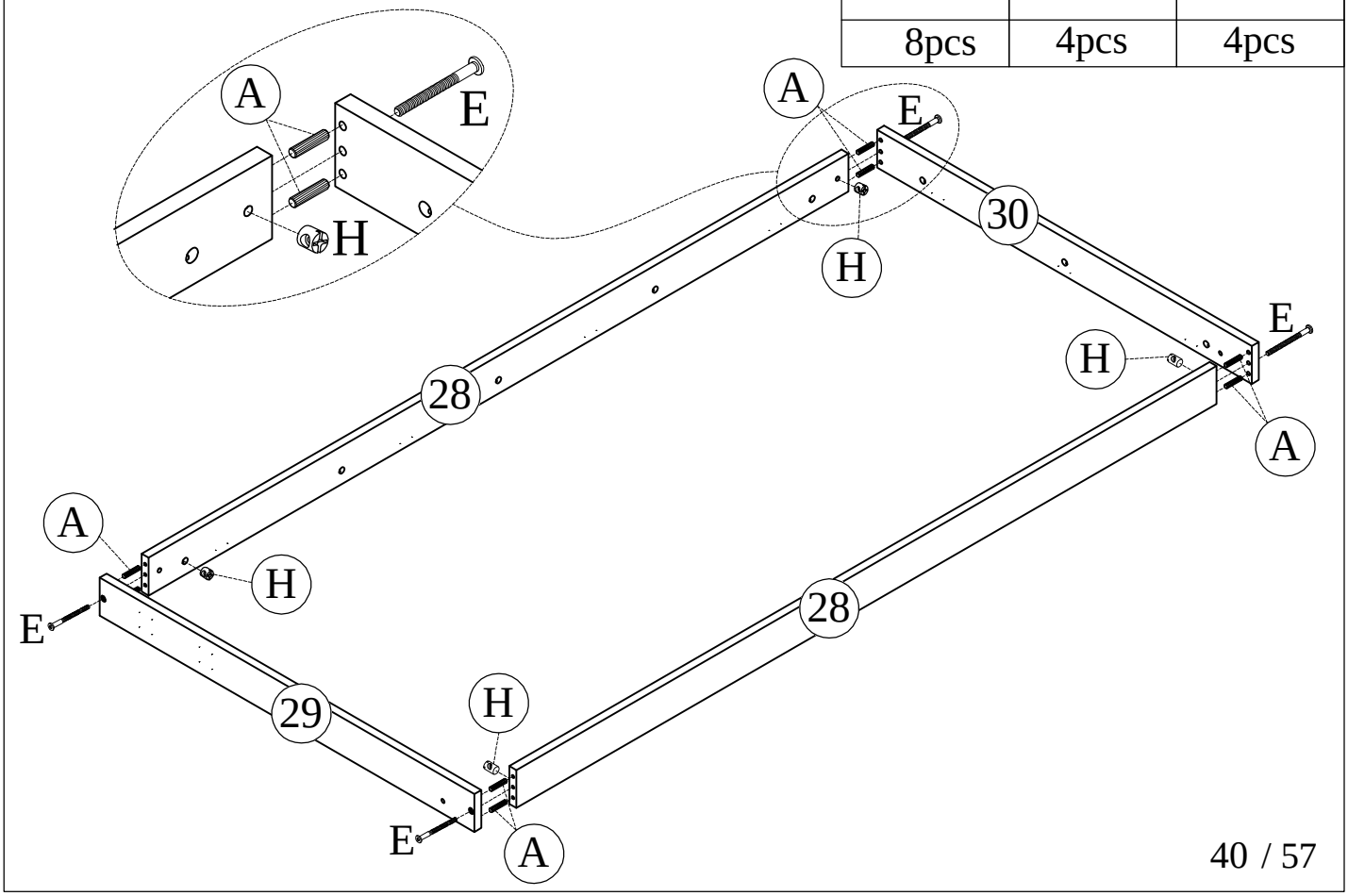

STEP-ÉTAPE-30:

N	
	16pcs

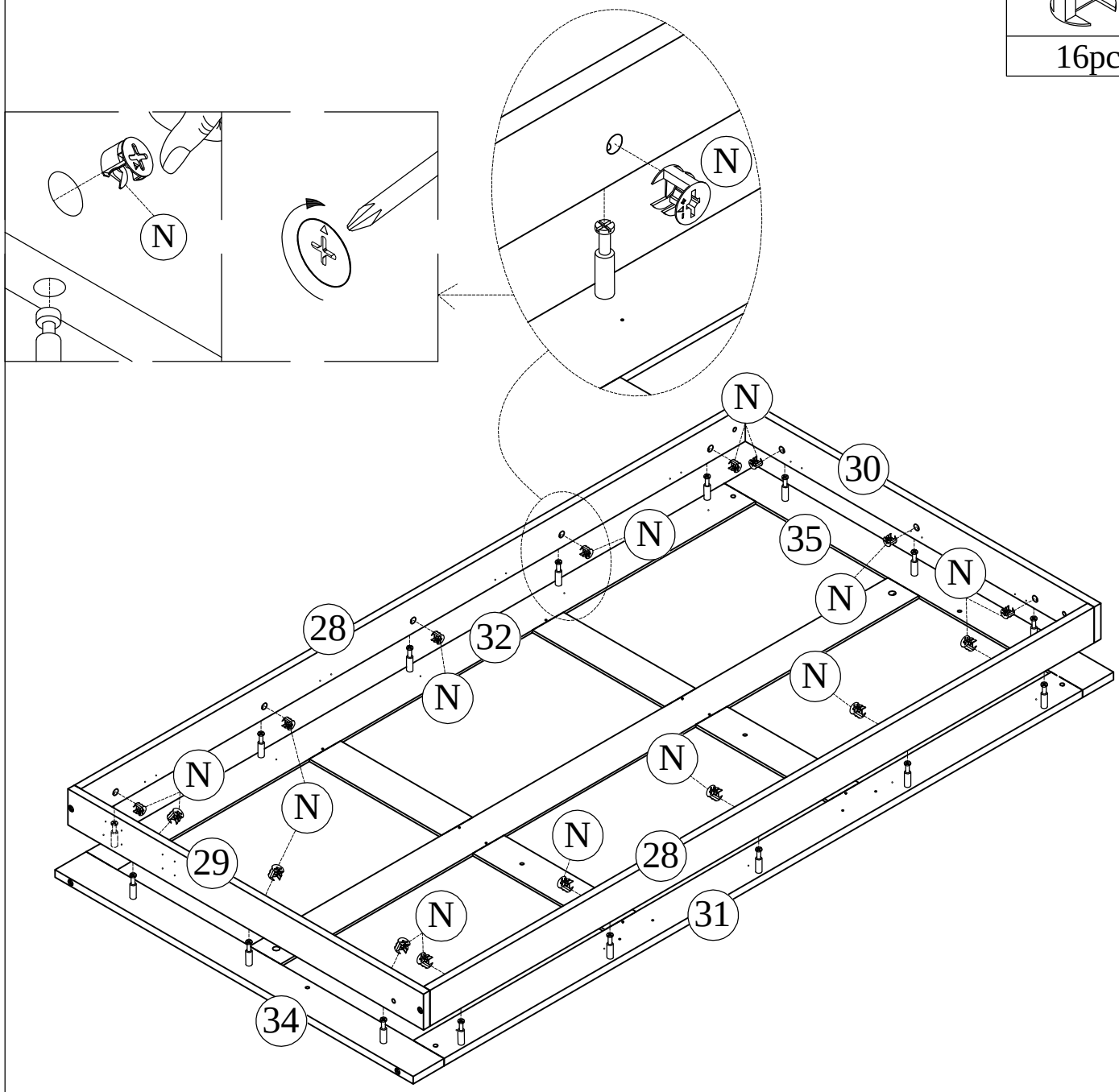

STEP-ÉTAPE-31:

P	O
56pcs	14pcs

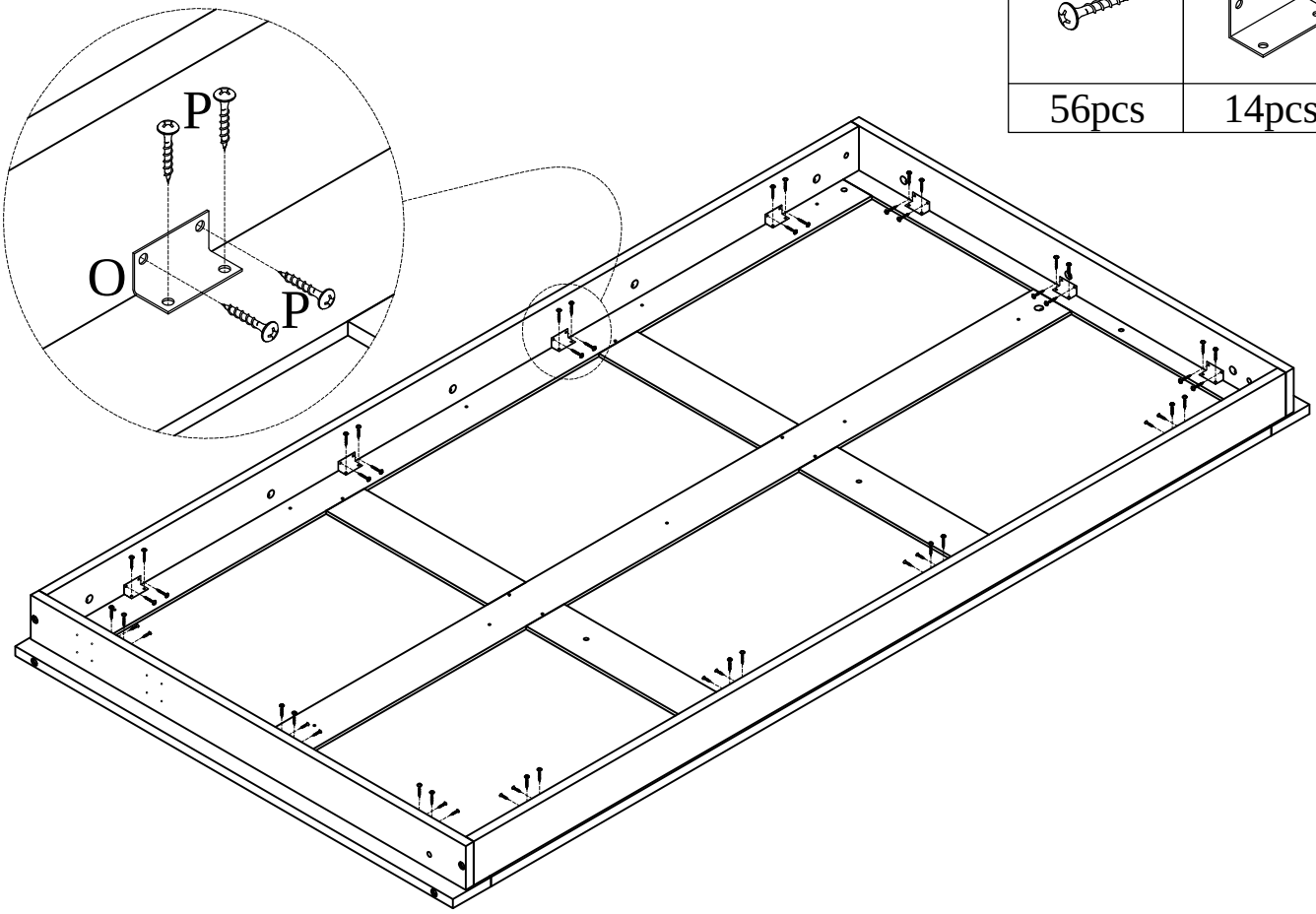

STEP-ÉTAPE-32:

FA	W
16pcs	2pcs

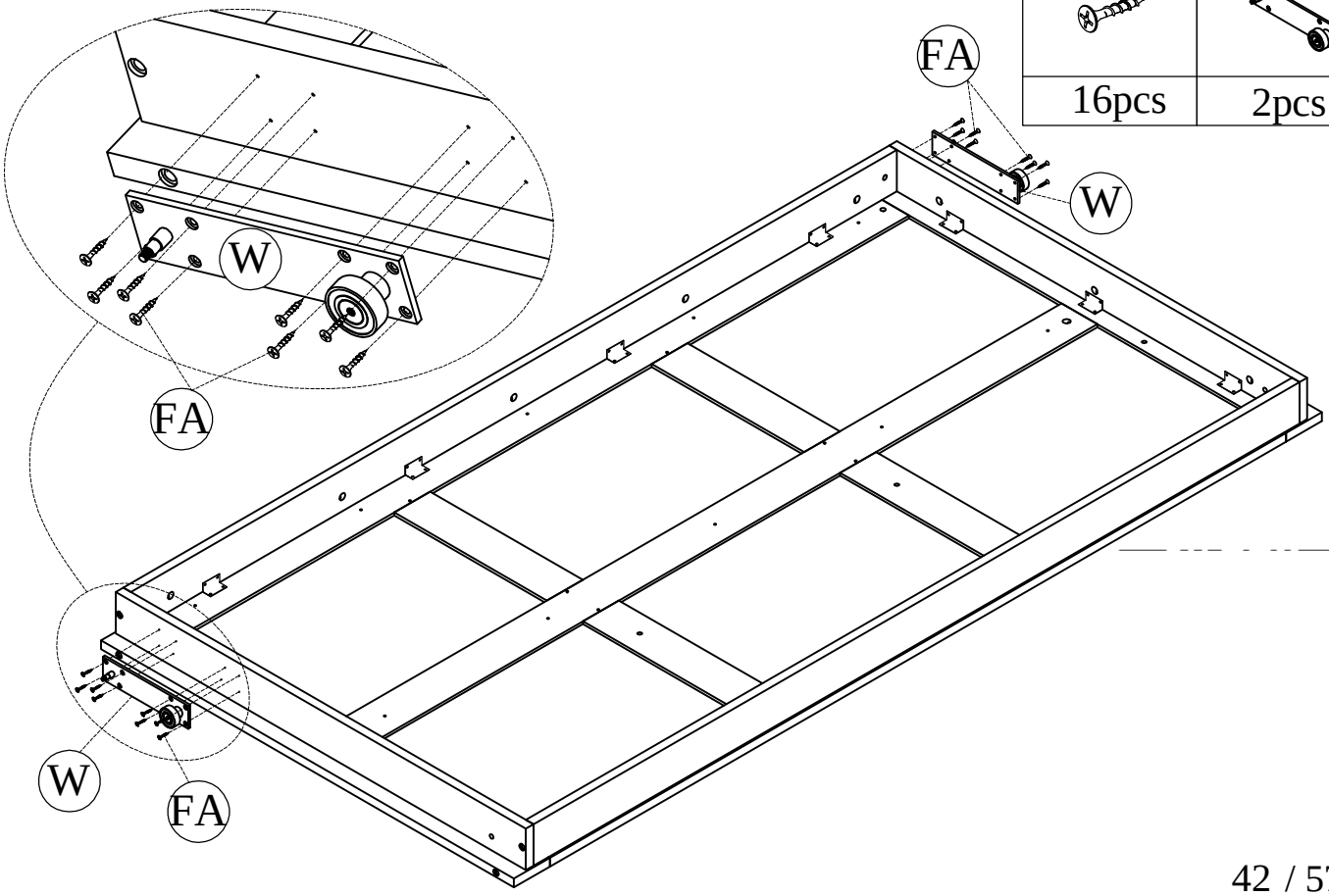

STEP-ÉTAPE-33:

V

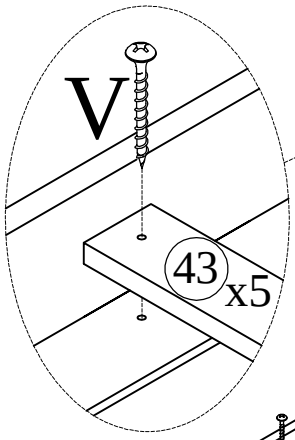

15pcs

STEP-ÉTAPE-34:

K



4pcs

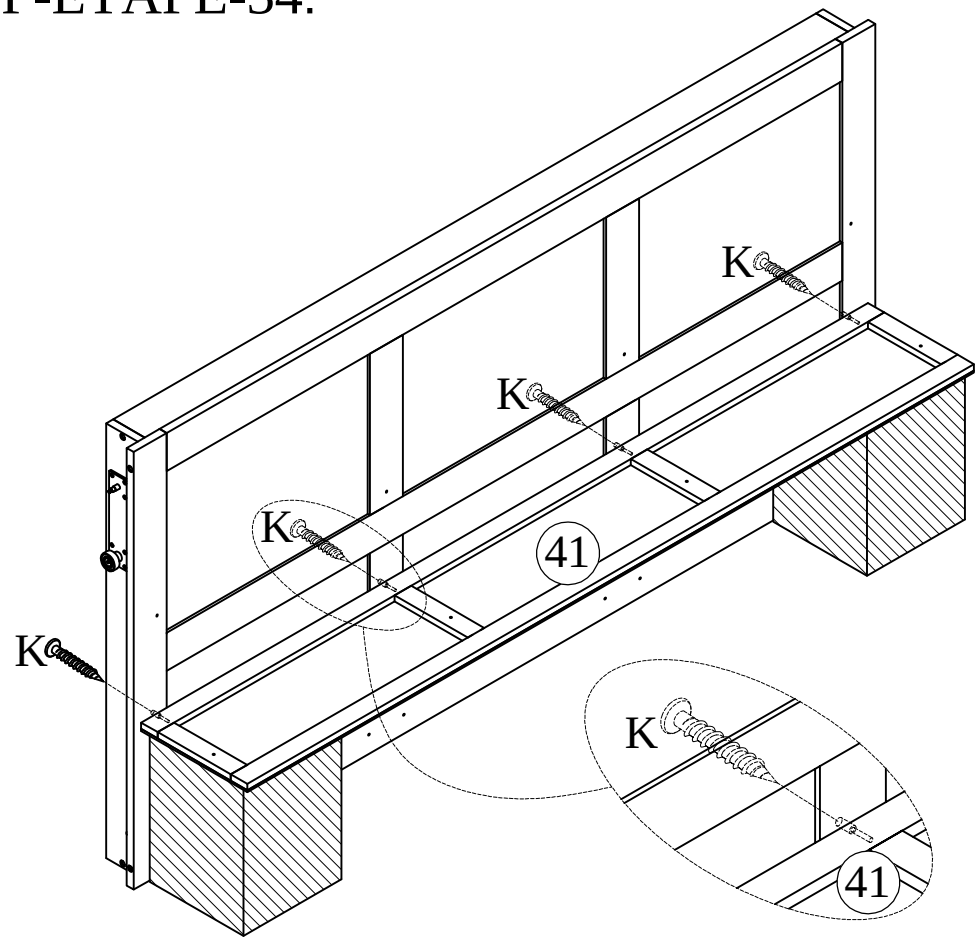

STEP-ÉTAPE-35:

K

8pcs

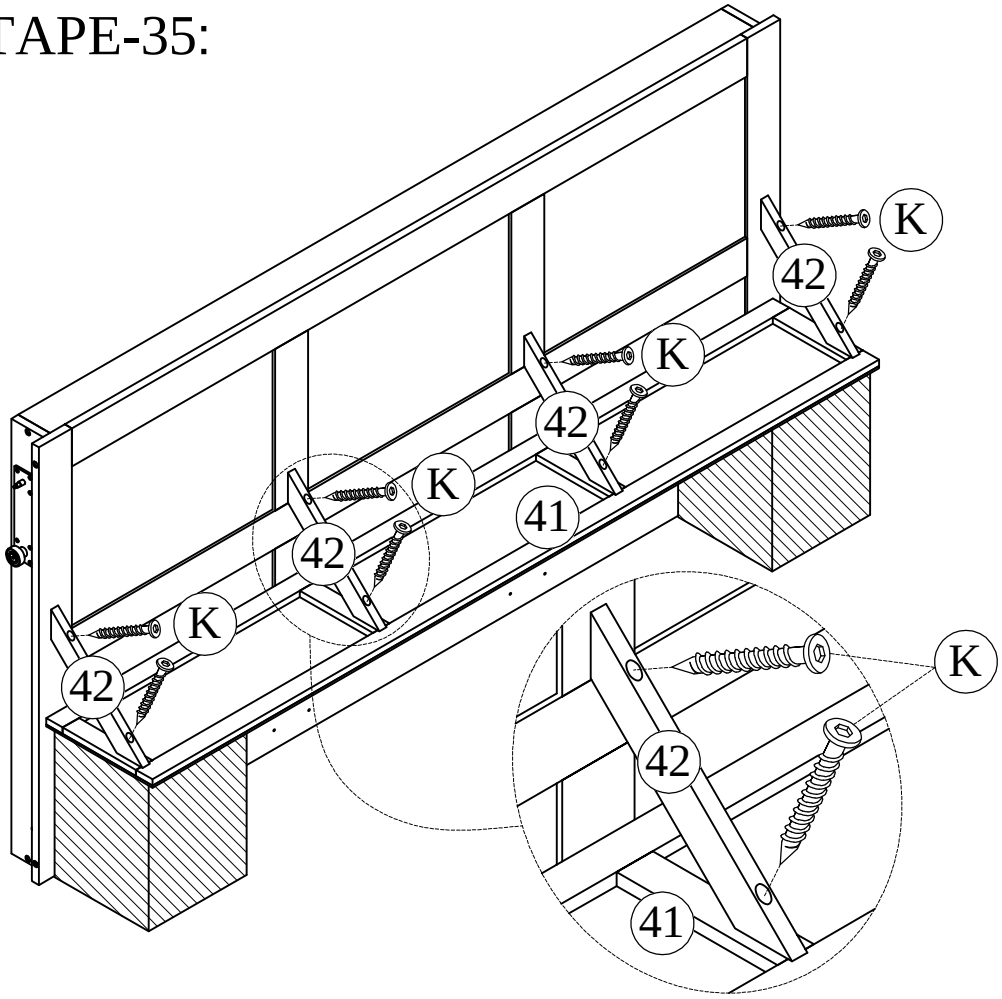

STEP-ÉTAPE-36:

R	FA
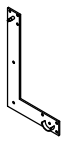	
1pc	10pcs

STEP-ÉTAPE-37:

L	FA
1pc	10pcs

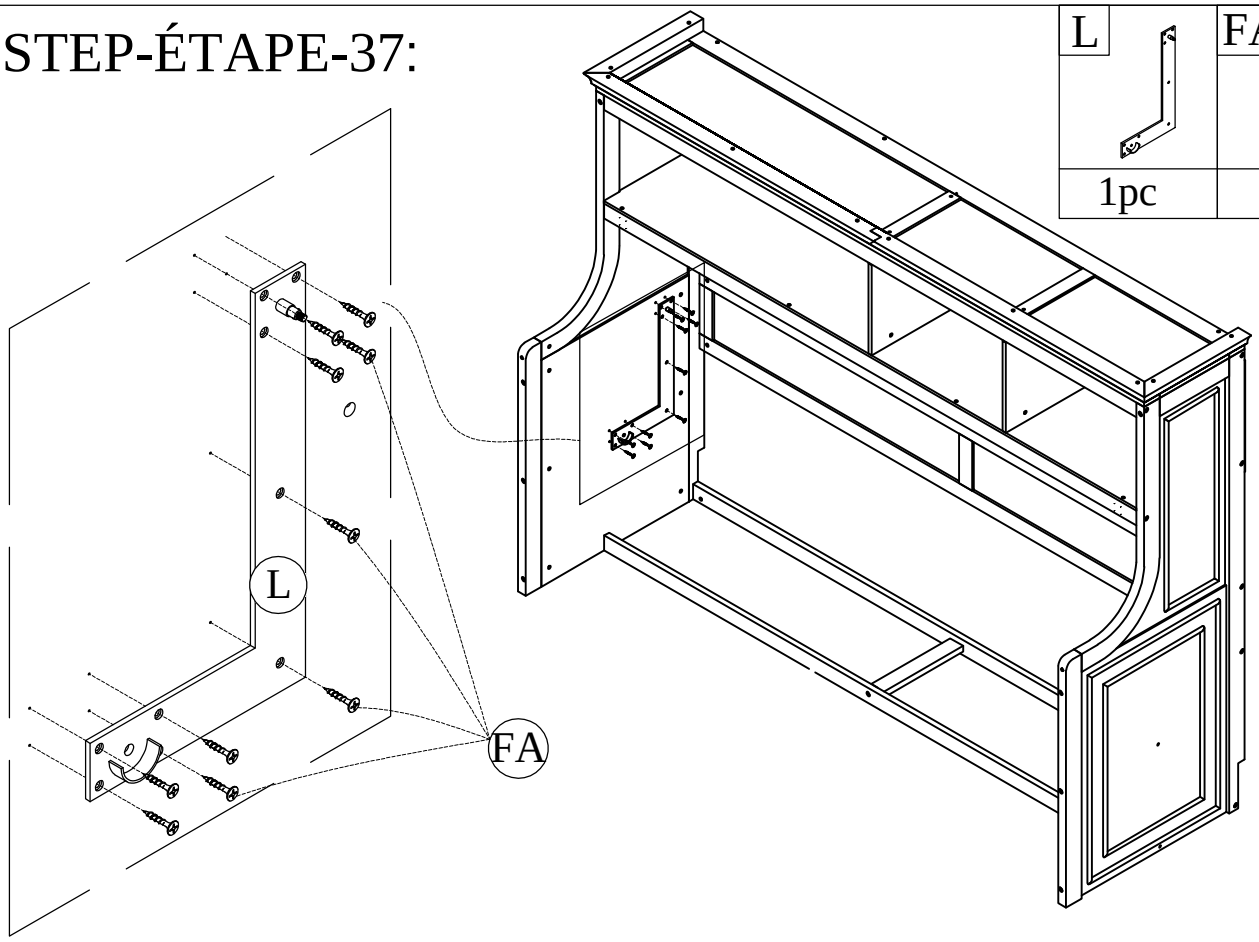

STEP-ÉTAPE-38:

S	Y
2pcs	2pcs

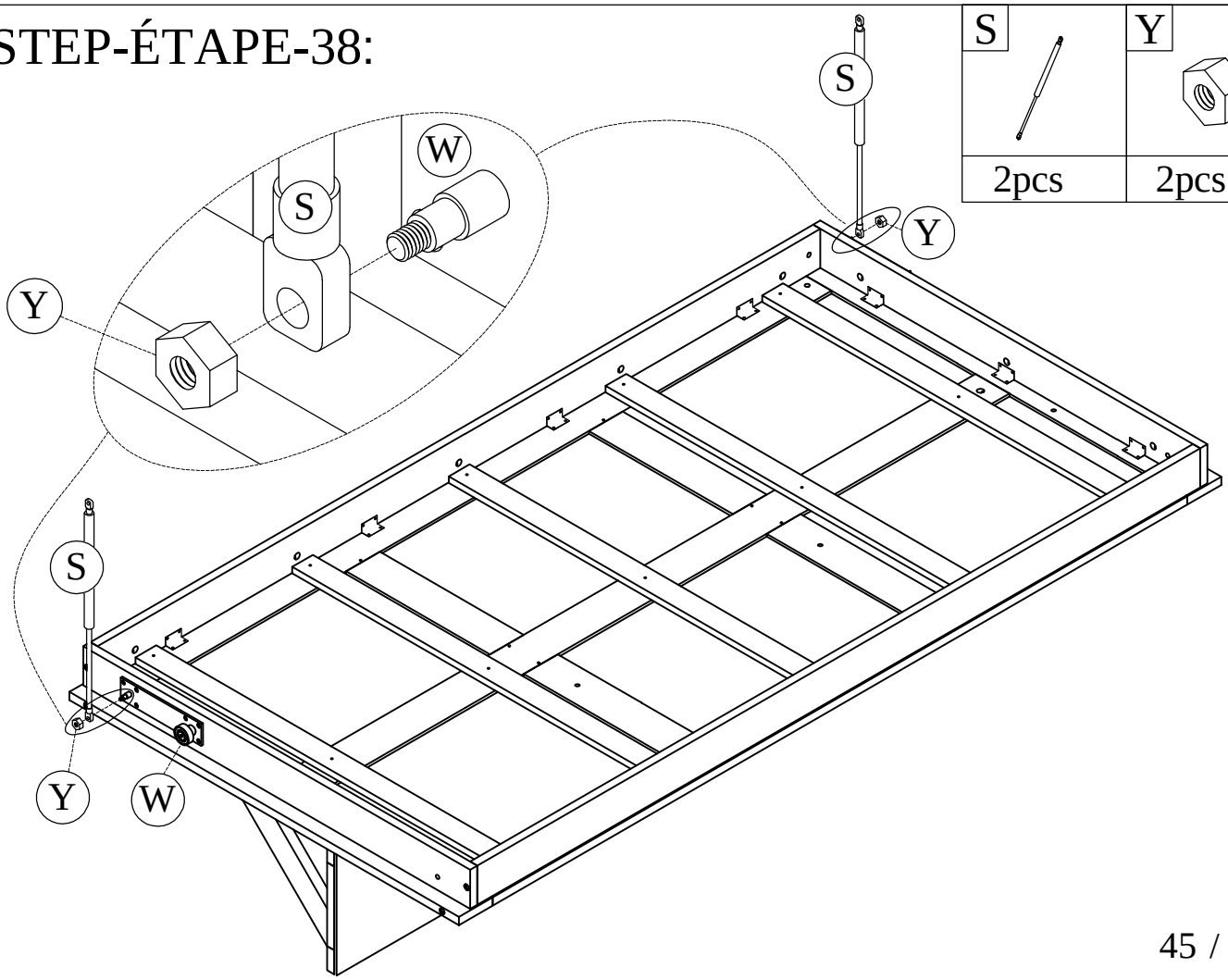

STEP-ÉTAPE-39:

G

2pcs



.Requires 4 people to assemble (2 people hold the large cabinet in place and 2 people tilt the bed until accessories are in place)
.Nécessite 4 personnes pour l'assemblage (2 personnes maintiennent la grande armoire en place et 2 personnes inclinent le lit jusqu'à ce que les accessoires soient en place)

STEP-ÉTAPE-40:

Y

1pc

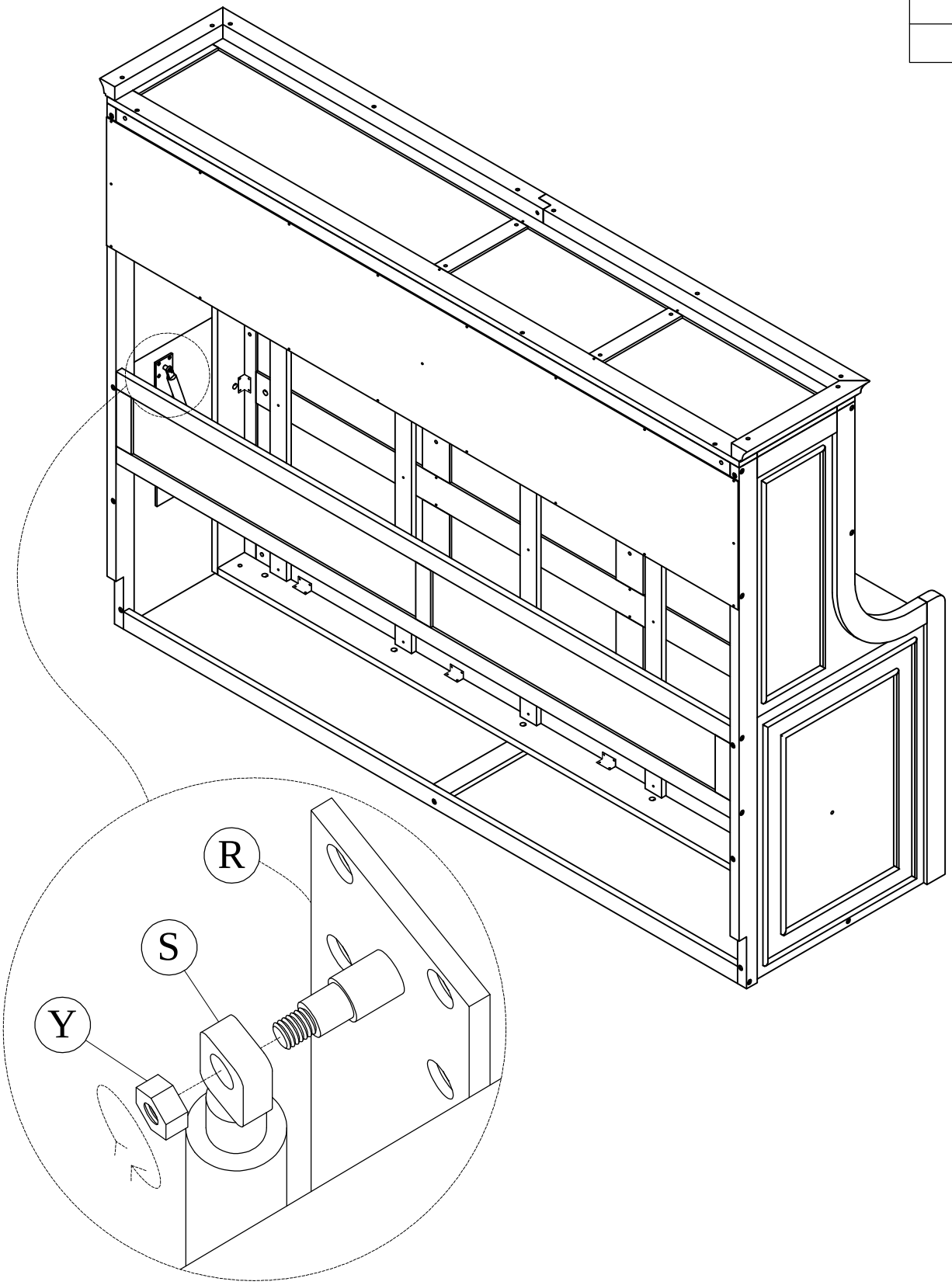



.Requires 4 people to assemble (2 people hold the large cabinet in place and 2 people tilt the bed until accessories are in place)
.Nécessite 4 personnes pour l'assemblage (2 personnes maintiennent la grande armoire en place et 2 personnes inclinent le lit jusqu'à ce que les accessoires soient en place)

STEP-ÉTAPE-41:

Y



1pc

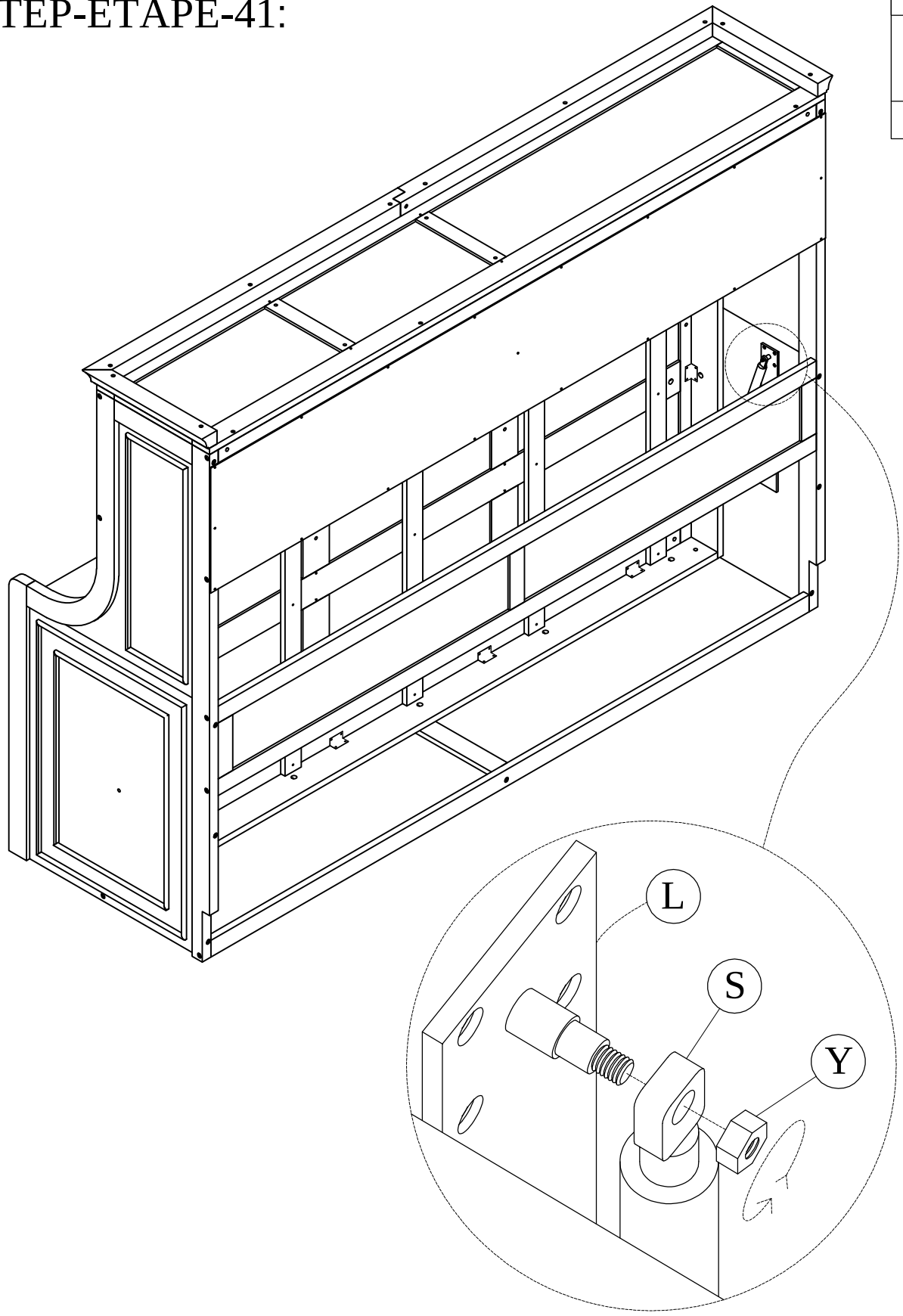



.Requires 4 people to assemble (2 people hold the large cabinet in place and 2 people tilt the bed until accessories are in place)
.Nécessite 4 personnes pour l'assemblage (2 personnes maintiennent la grande armoire en place et 2 personnes inclinent le lit jusqu'à ce que les accessoires soient en place)

STEP-ÉTAPE-42:

FE	I	J
2pcs	2pcs	2pcs

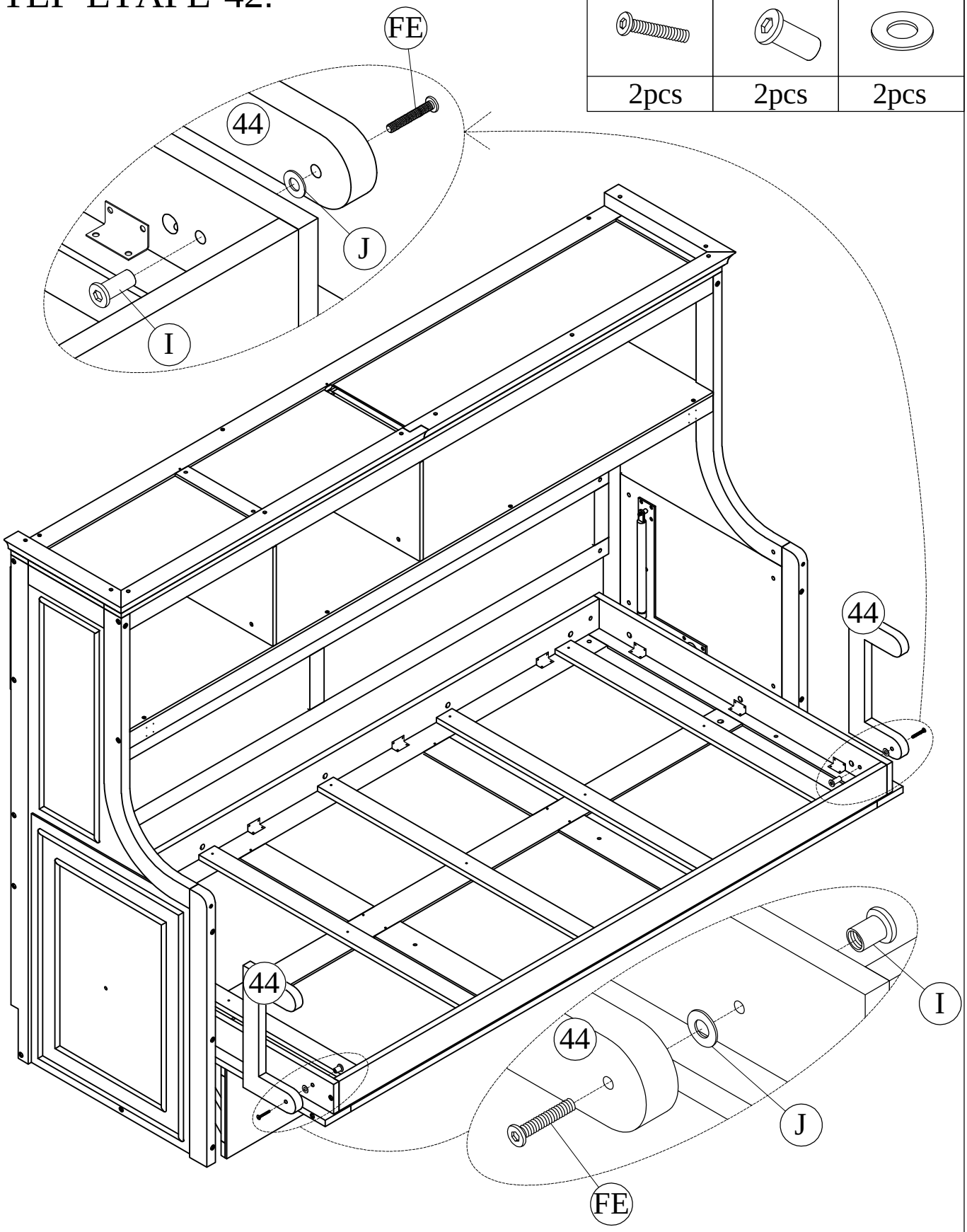

STEP-ÉTAPE-43:

Z	Q	HA	IA
8pcs	2pcs	4pcs	2pcs

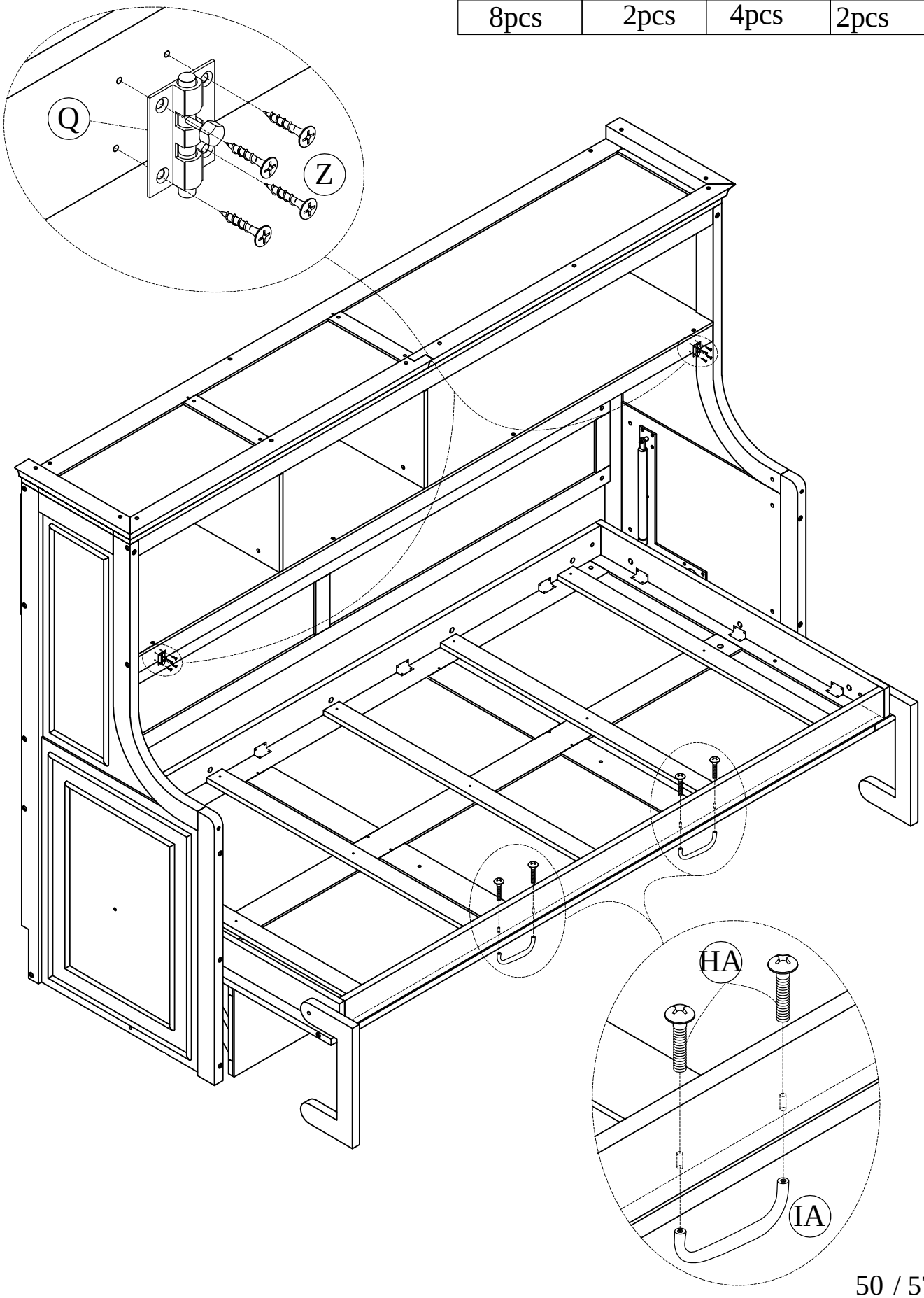

1- Determine the position of the bed in the room.

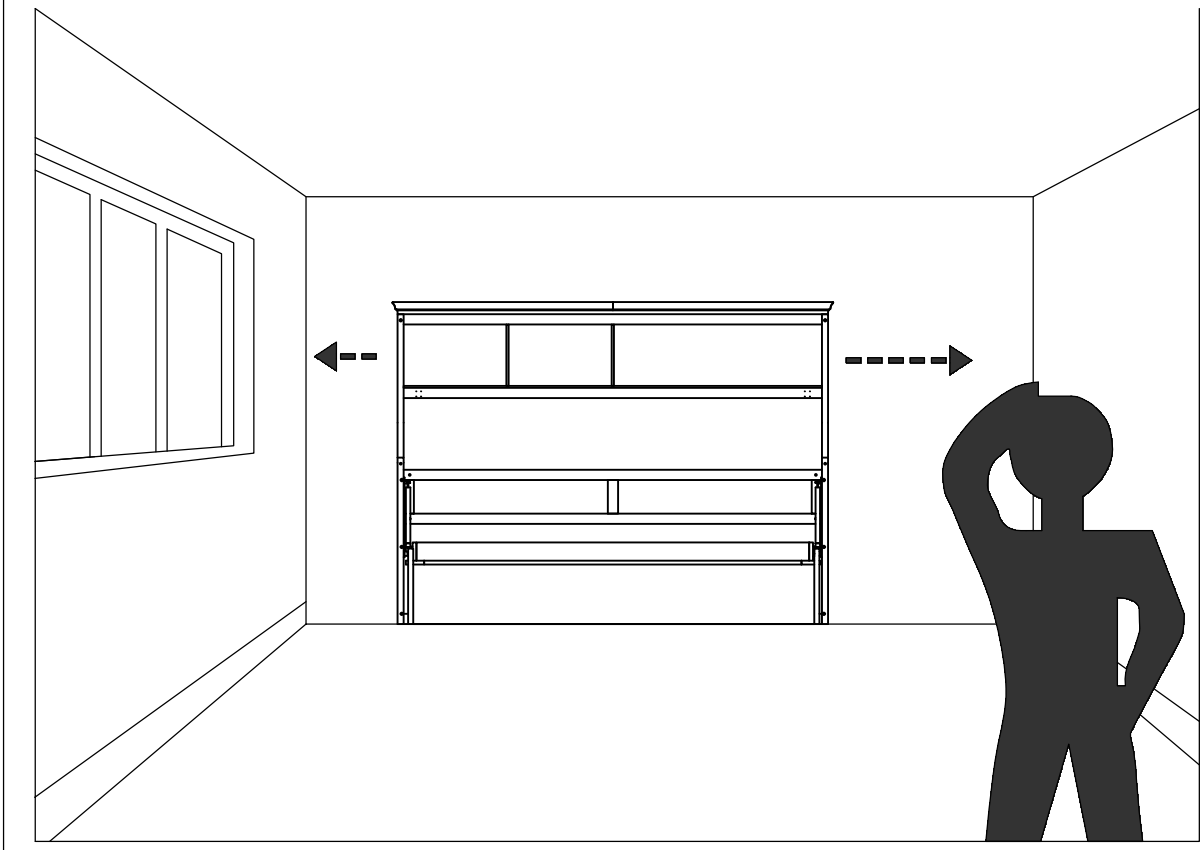

2- Put the bed back in its place. Please keep it vertical and horizontal.

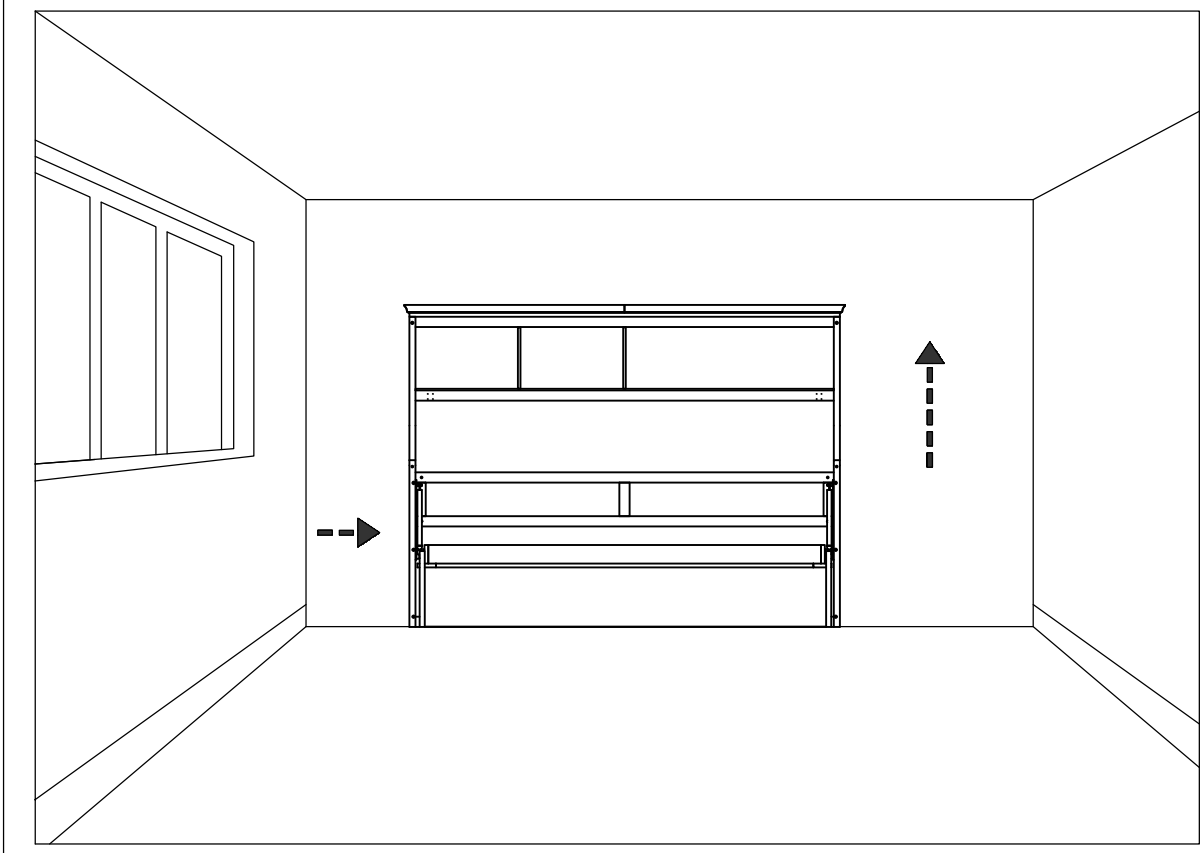

3- Mark the points drill holes according to actual products.

3- Marquez les points de perçage en fonction des produits réels.

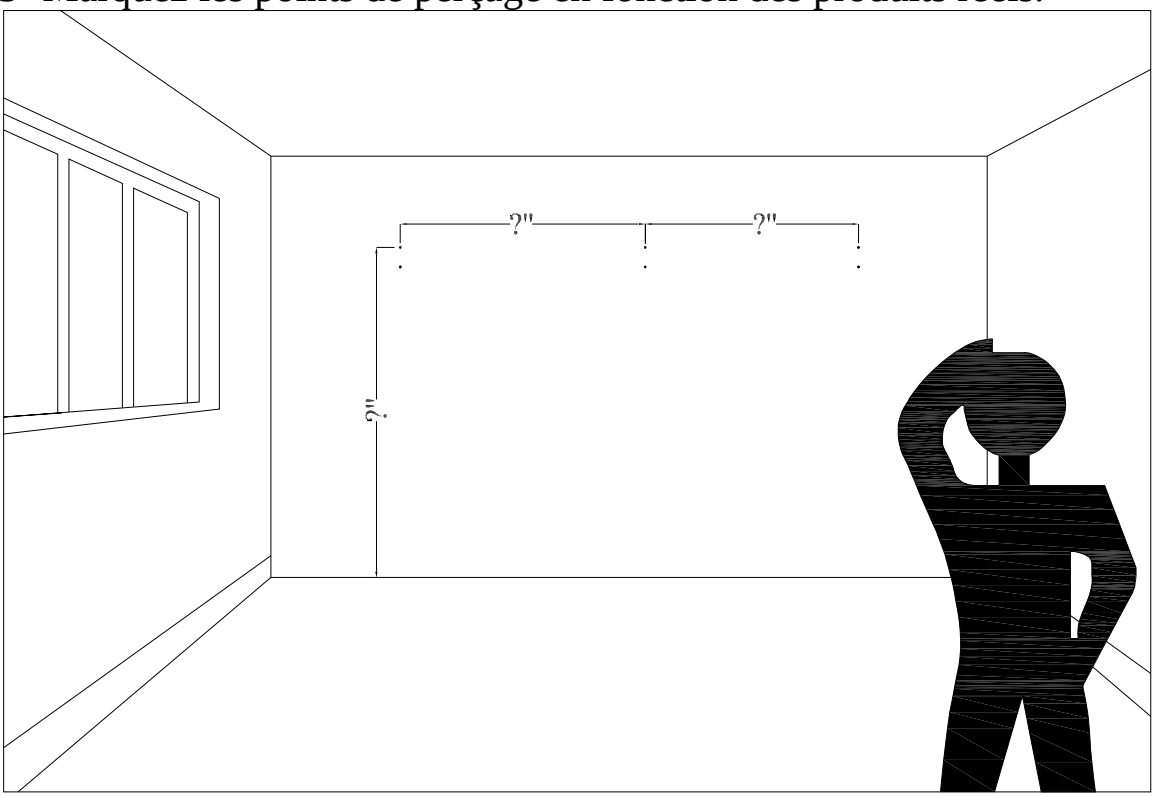

4- Hammer the positions marked in MARK 3 and secure the screw.

4- Frapper les positions marquées à MARQUE 3 et fixez la vis.

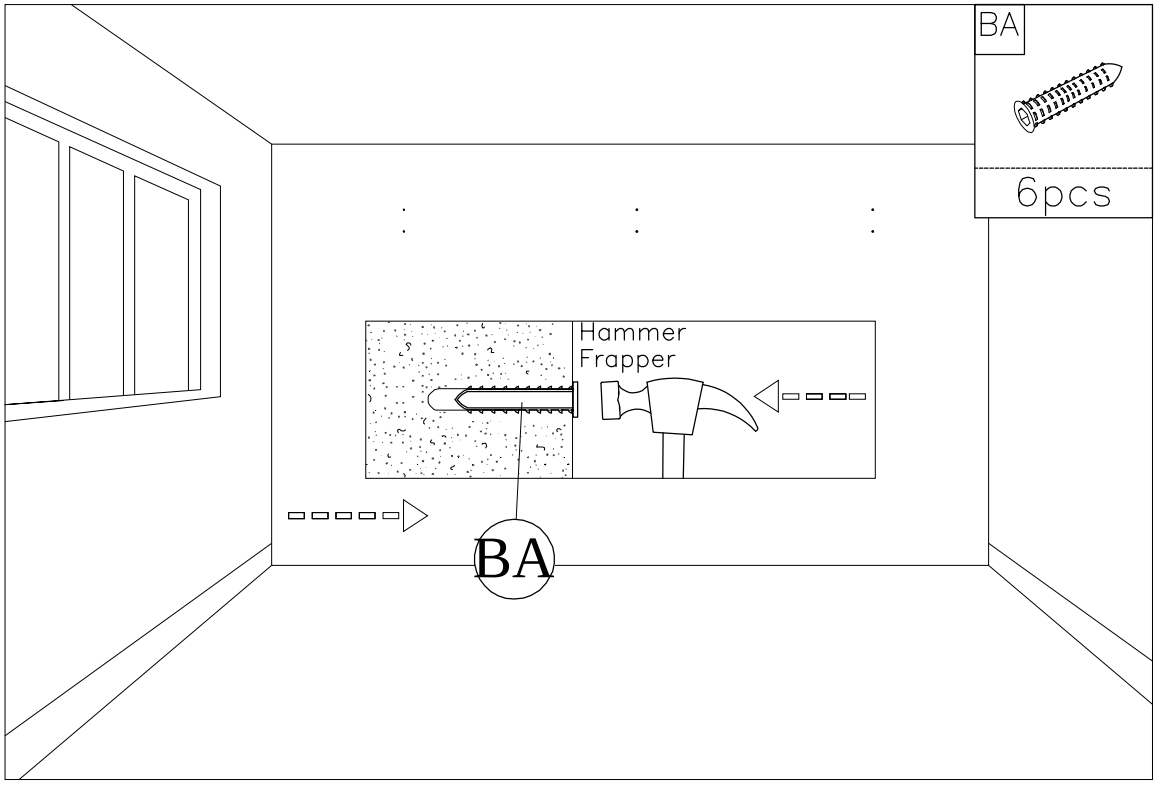

STEP-ÉTAPE-44:

DA	YS
3pcs	6pcs

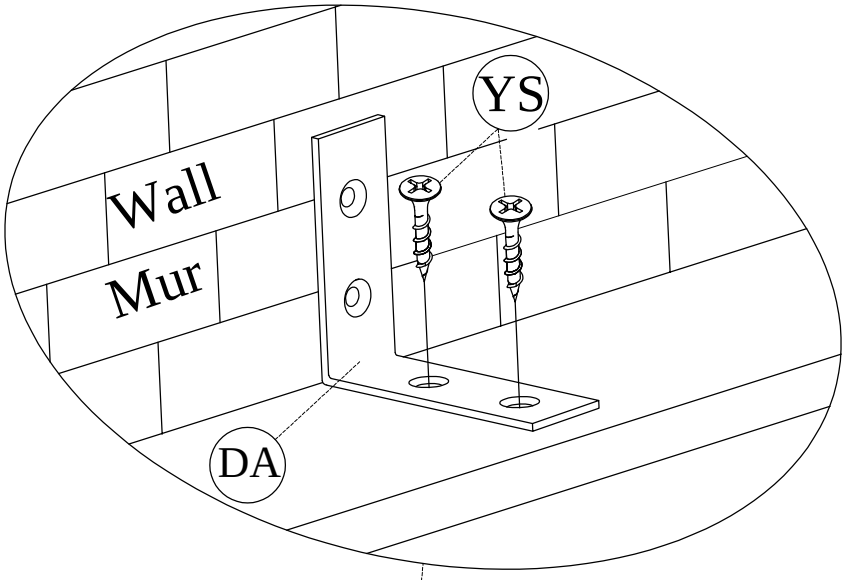

STEP-ÉTAPE-45:

SA

6pcs

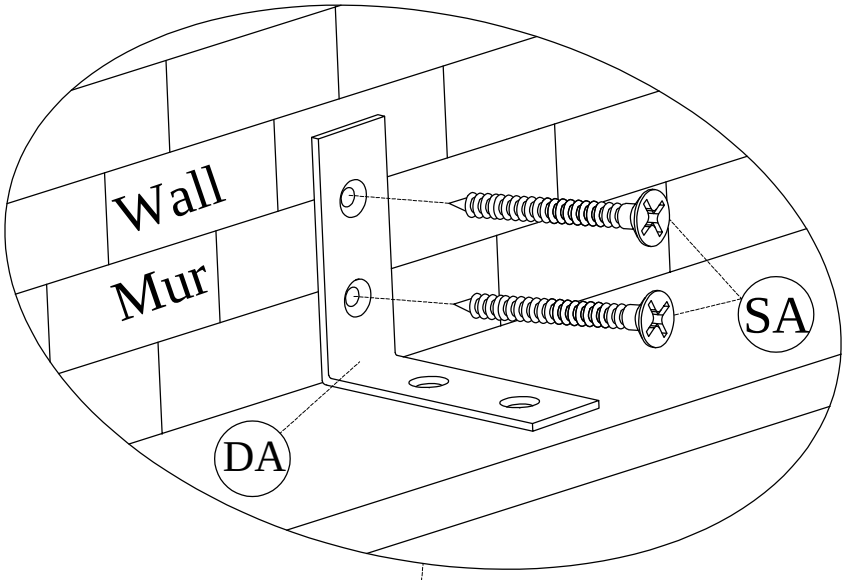

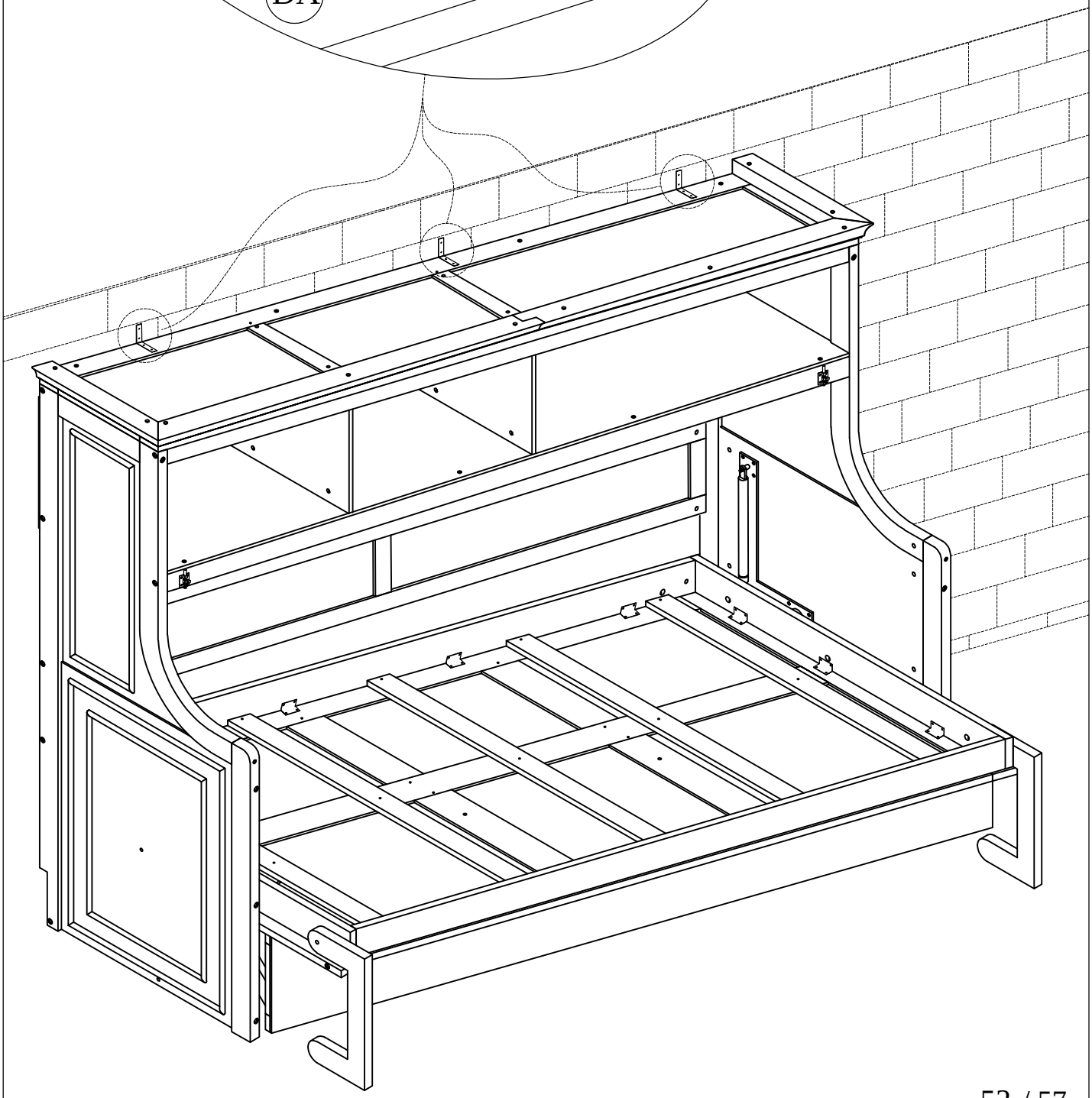

FINISH OPTION 1:
OPTION DE FINITION 1 :

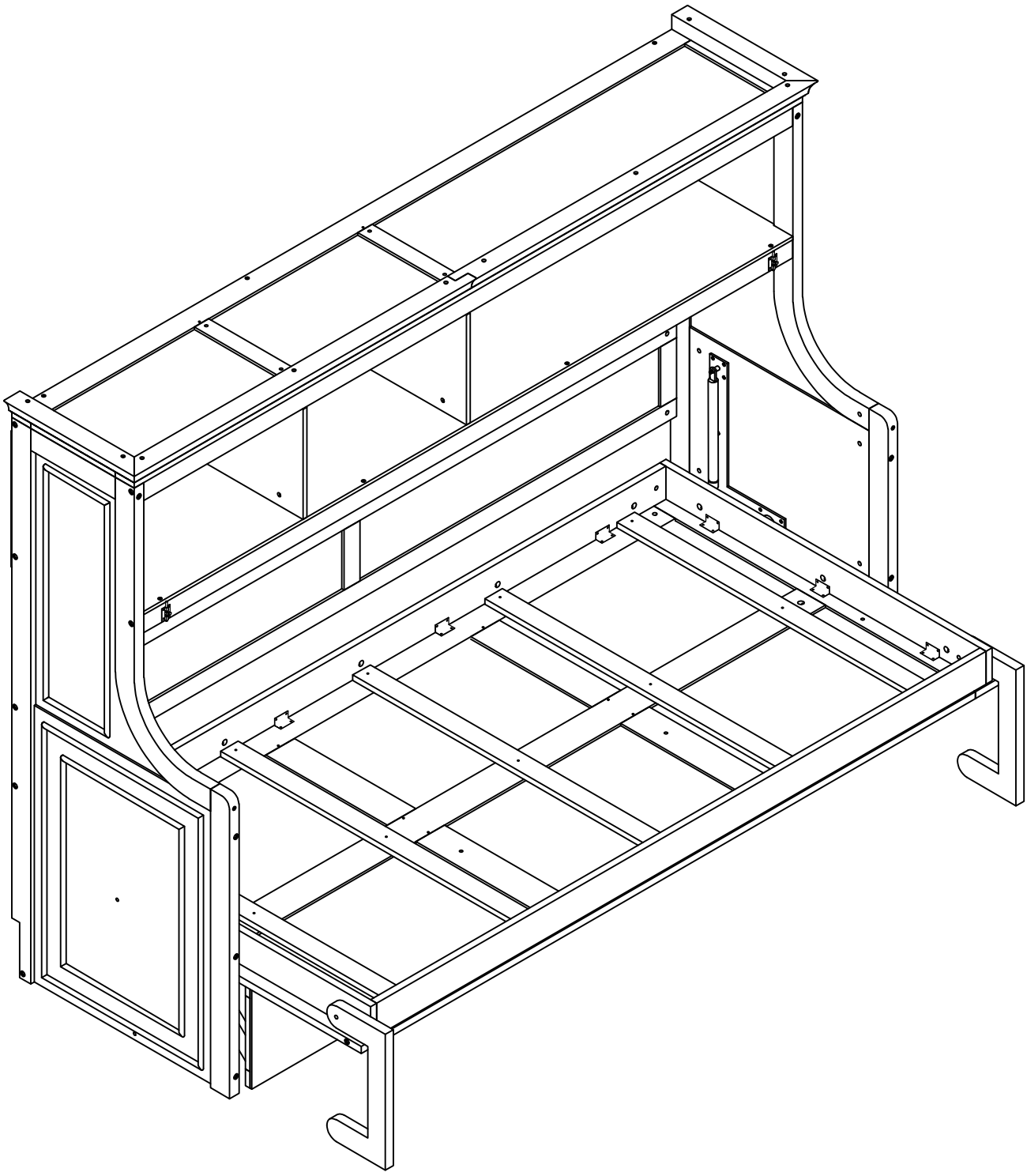

OPTION 2 TRANSFORM :
OPTION 2 TRANSFORMER :

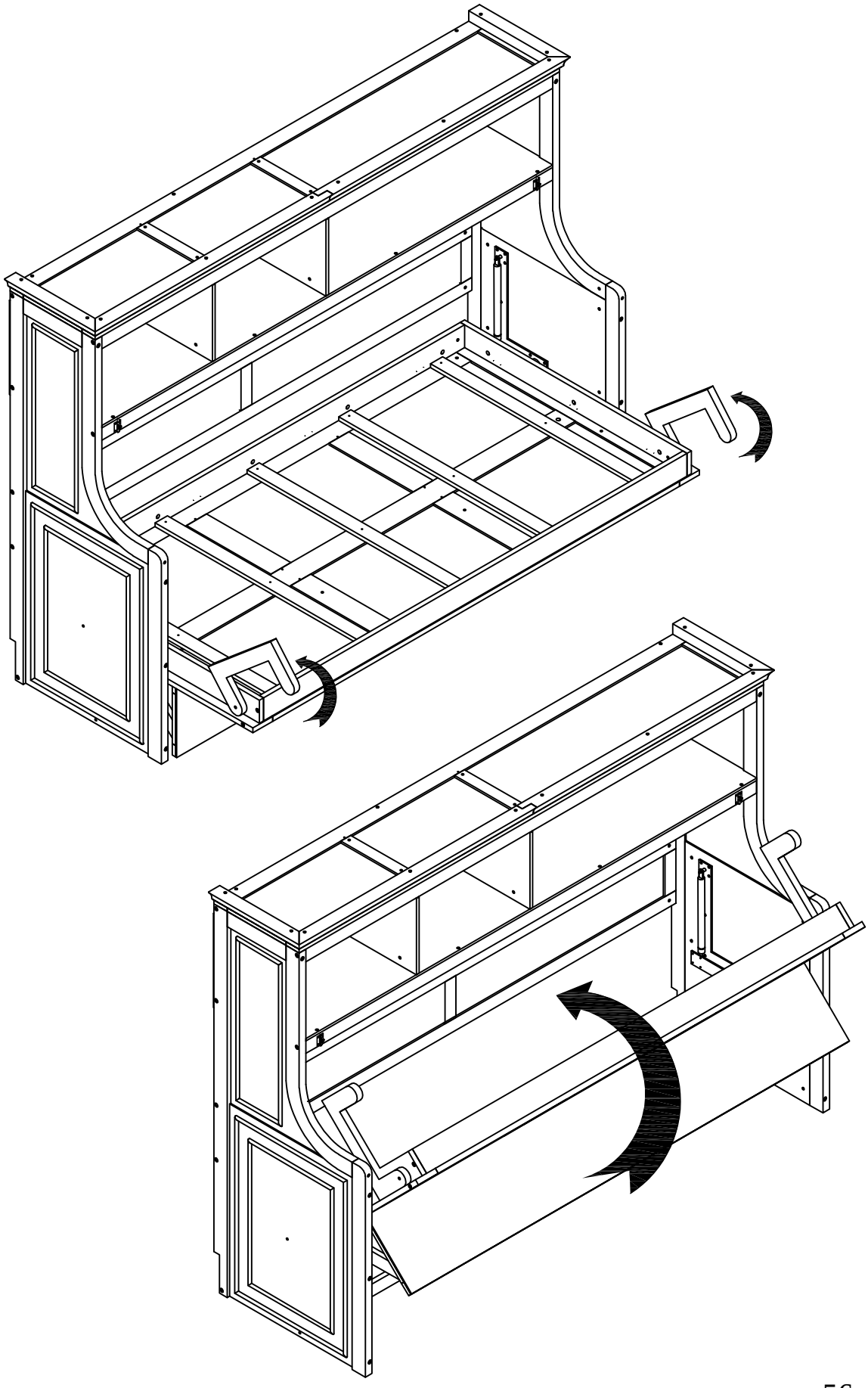

FINISH OPTION 2:
OPTION DE FINITION 2 :

