ASSEMBLY INSTRUCTIONS

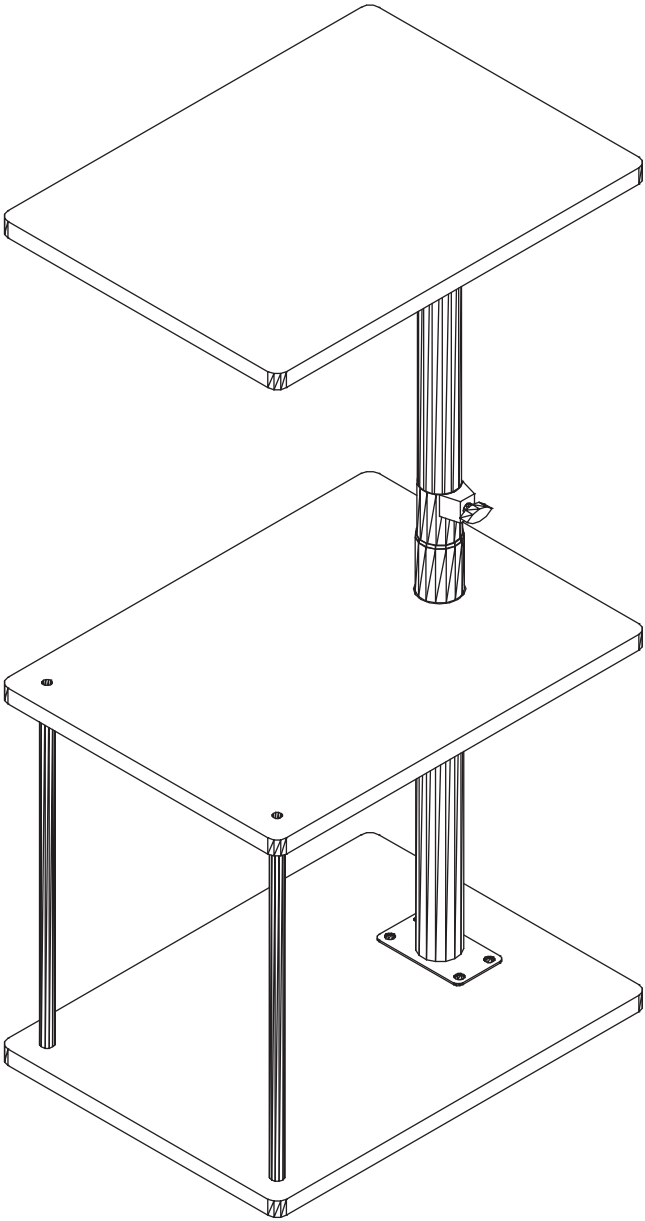

Disassembly Diagram

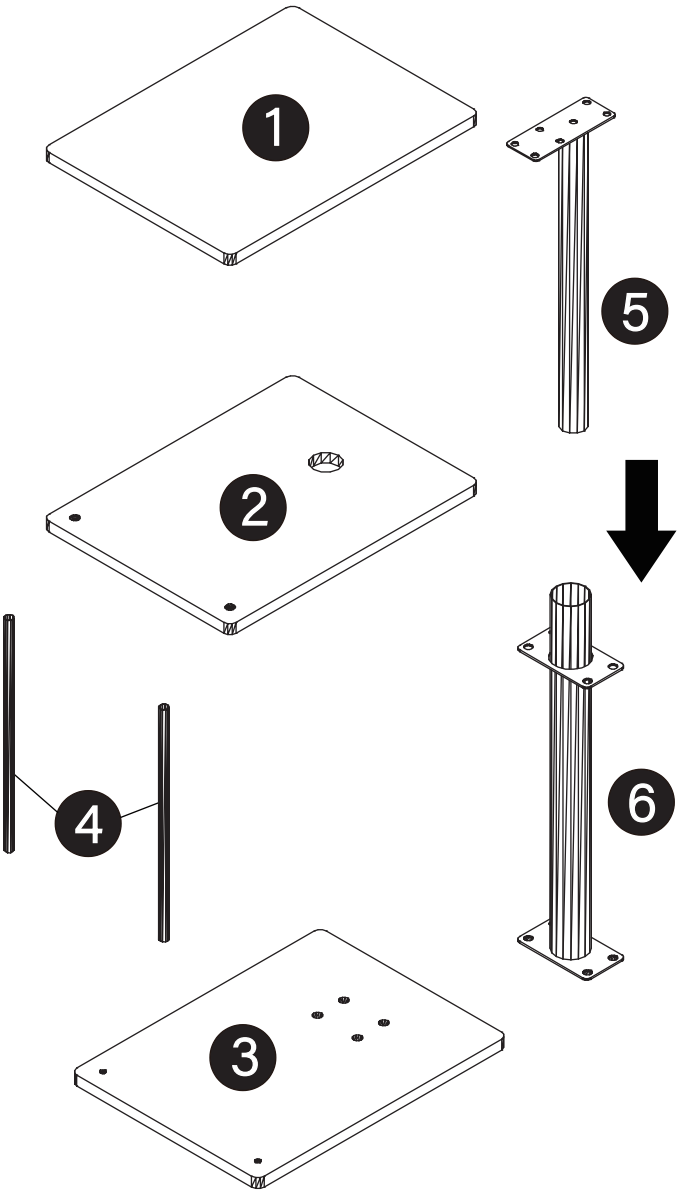

Accessories

M6*25  A 5PCS	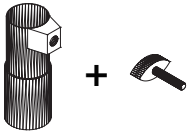 B 1PC	M6*10 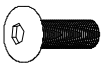 C 16PCS	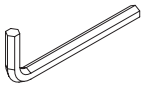 D 1PC
φ35 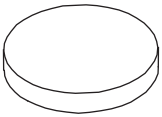 E 5PCS	 F 2PCS		

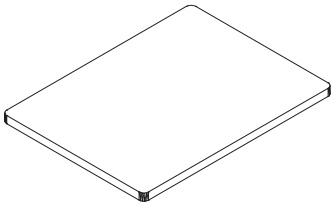
1 1PC

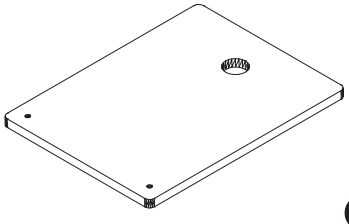
2 1PC

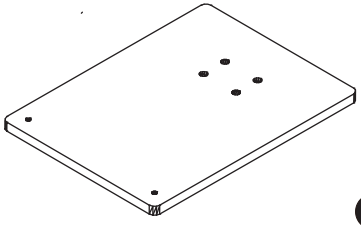
3 1PC


4 2PCS

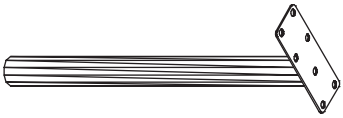
5 1PC


6 1PC

Step1

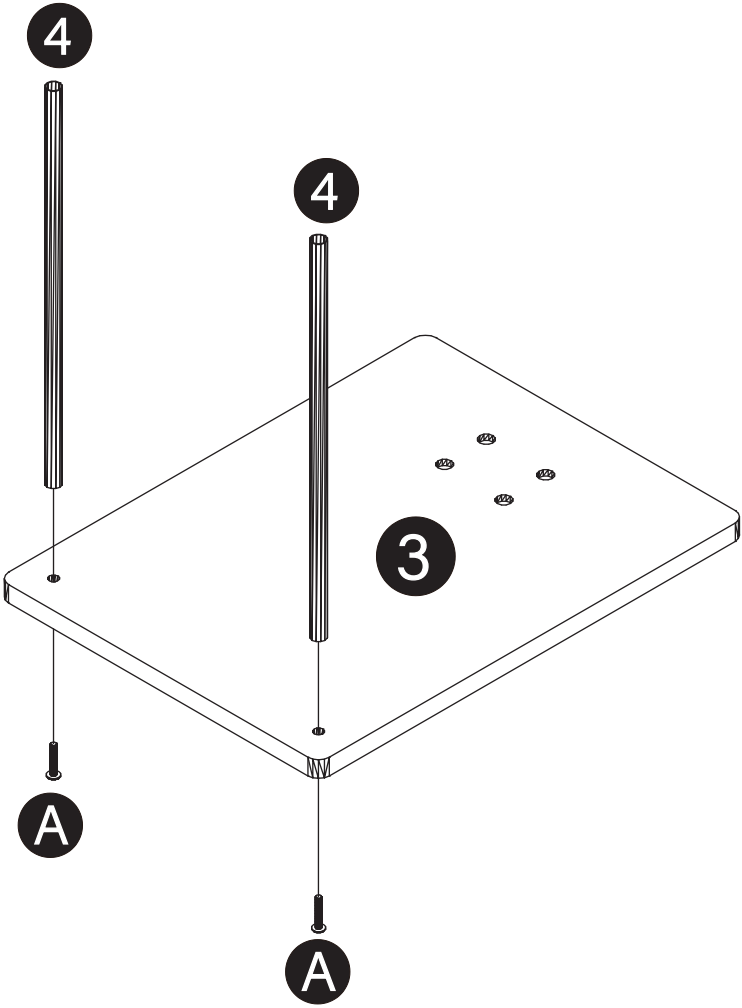

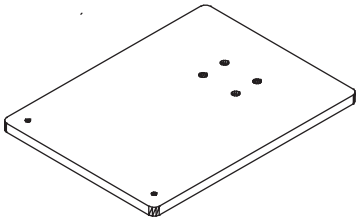

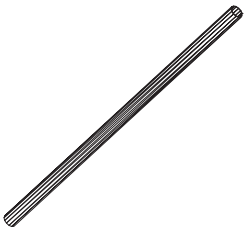

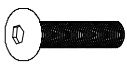

3 1PC

4 2PCS

A 2PCS

Step2

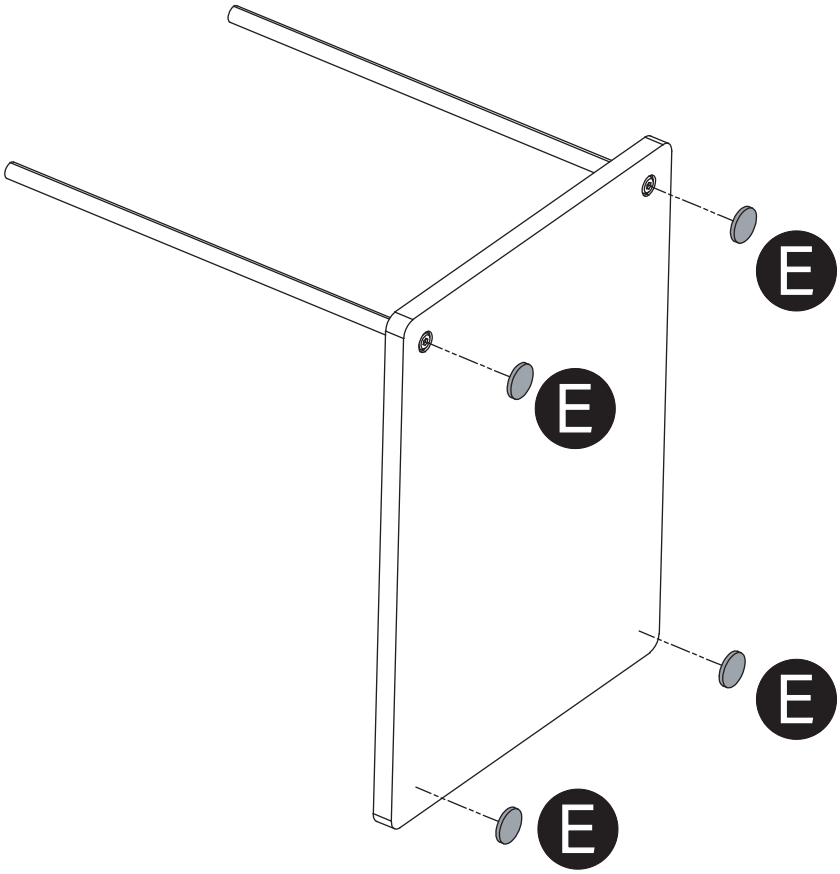

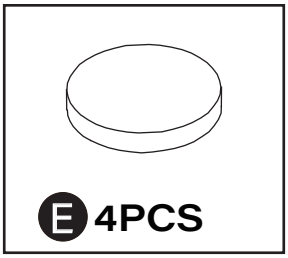

Step3

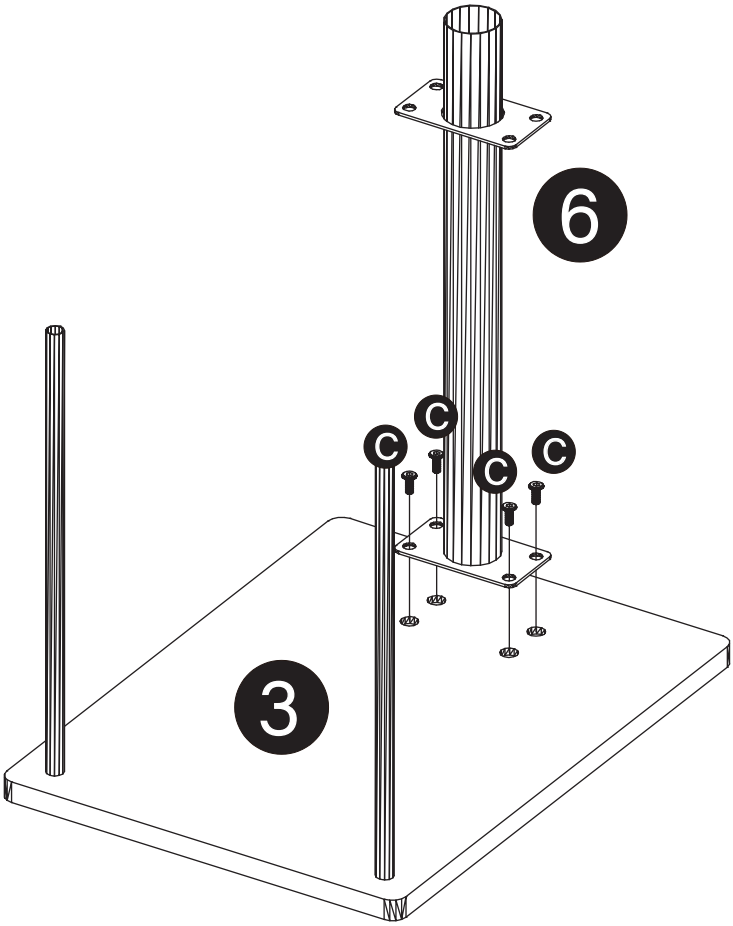

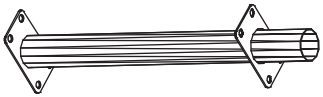

6 1PC

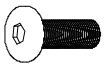

C 4PCS

Step4

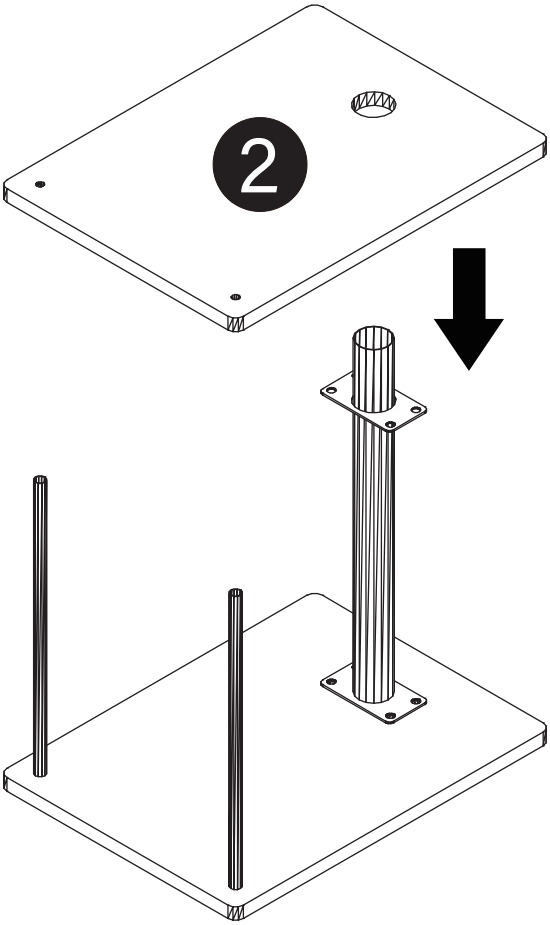

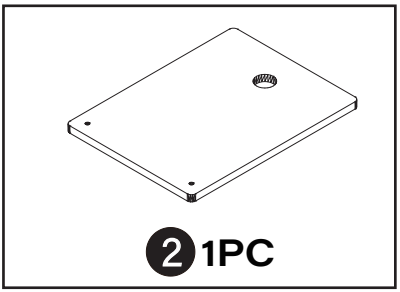

Step5

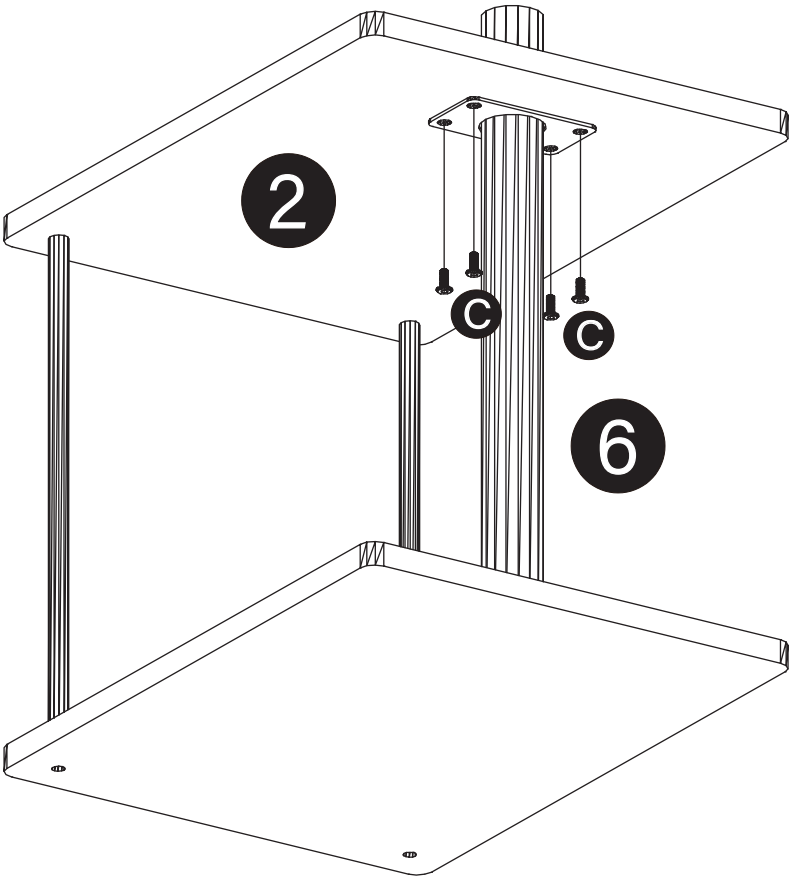

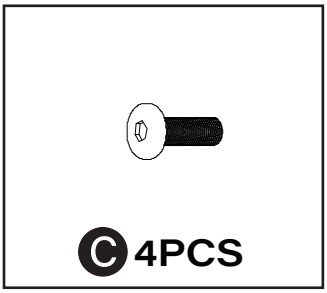

Step6

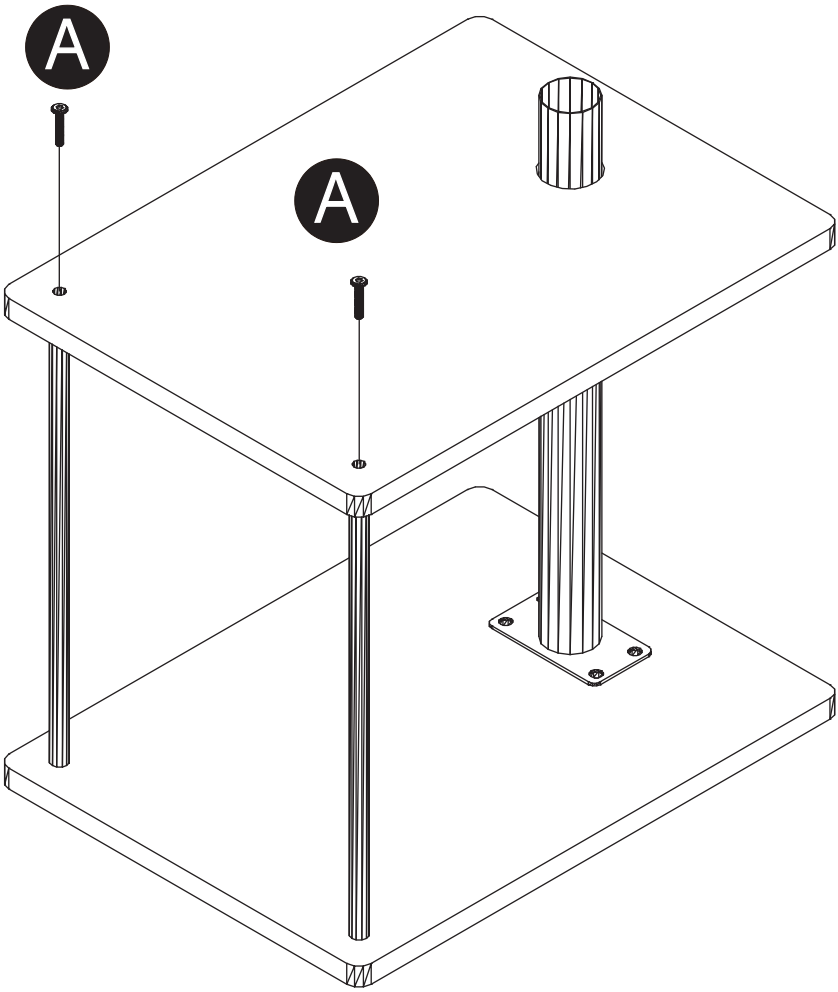

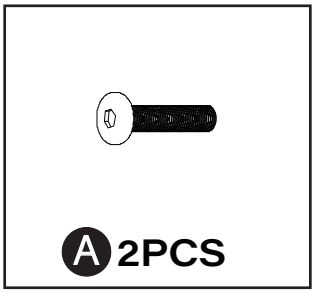

Step7

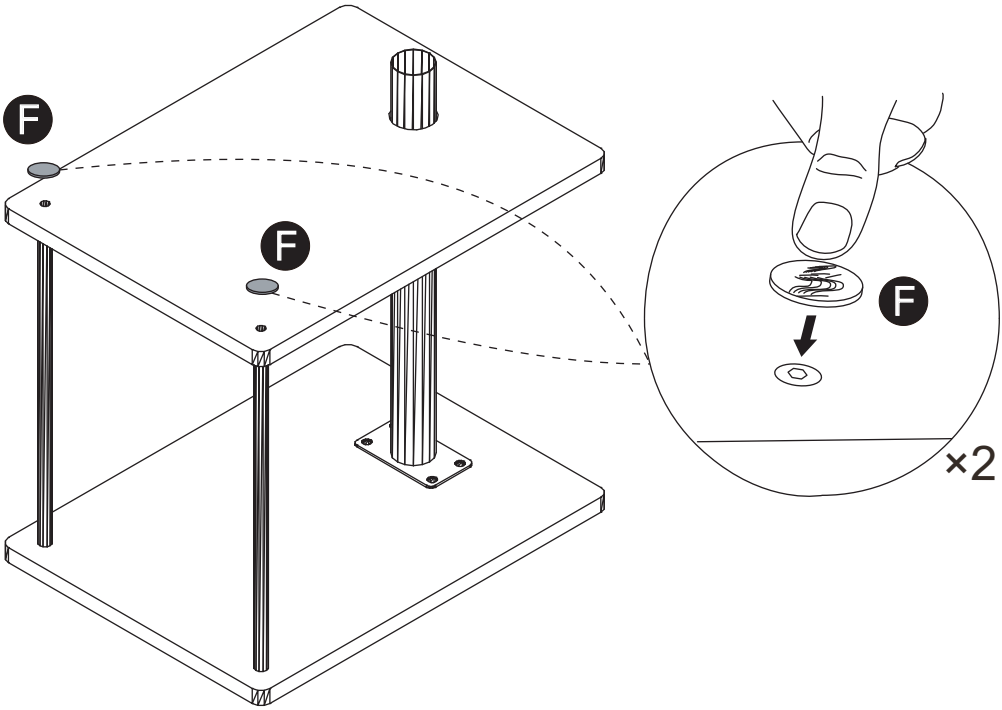

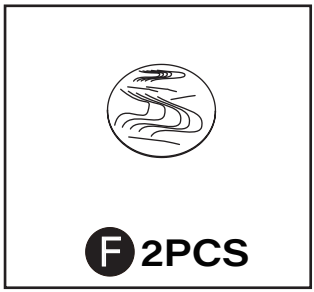

Step8

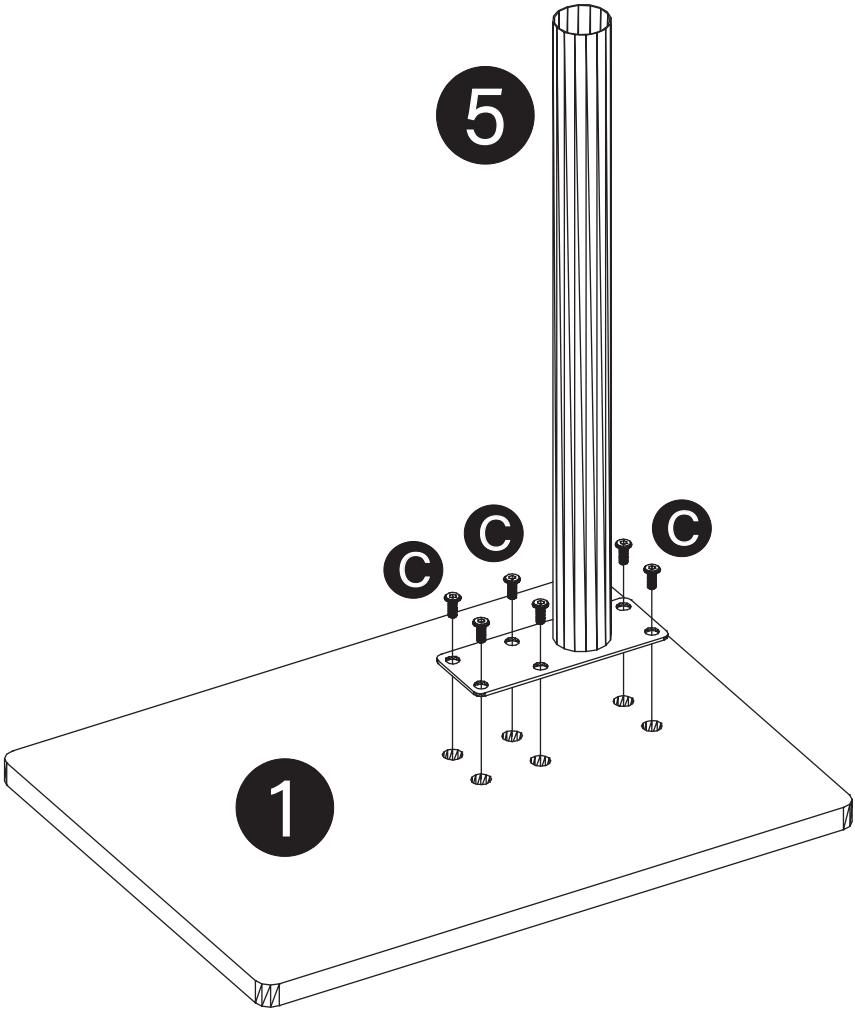

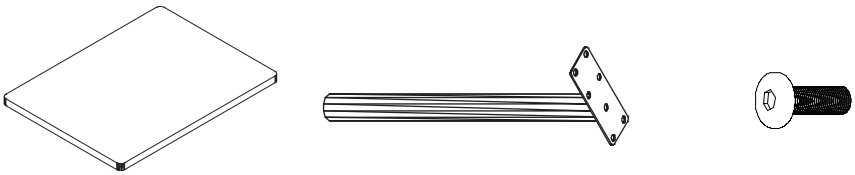

1 1PC

5 1PC

C 6PCS

Step9

The upper and lower diameters of part B are different.
When inserting part B, make sure the larger end faces down

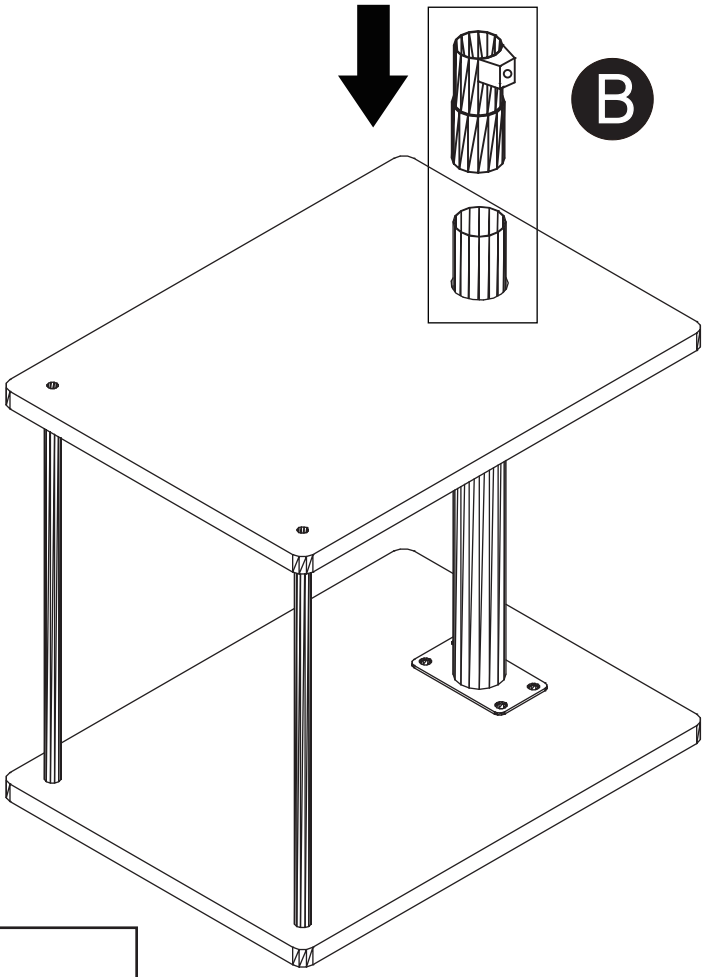

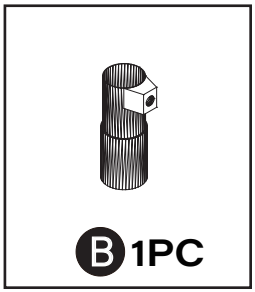

Step10

After adjusting to the desired height,
please tighten the knob of part B securely

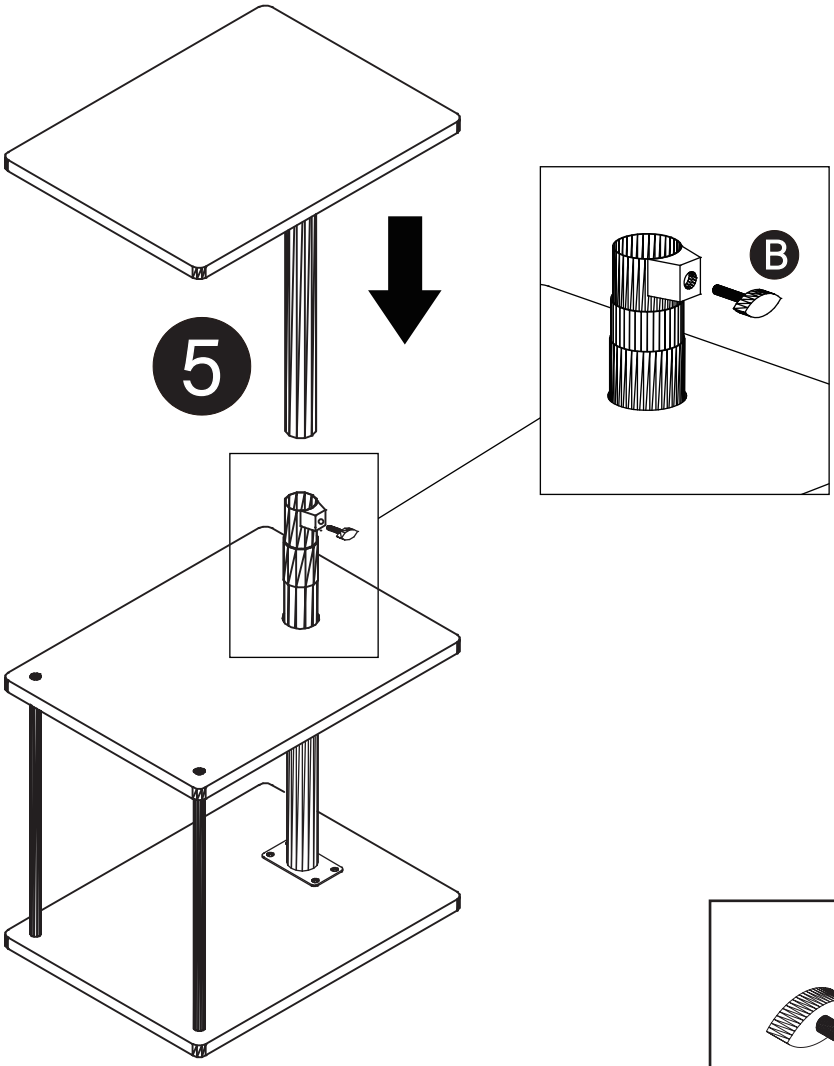

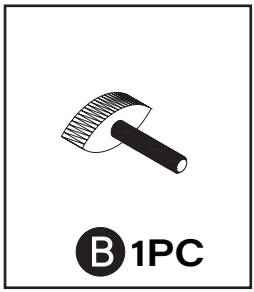

Step11

