ASSEMBLY INSTRUCTION

SIDEBOARD

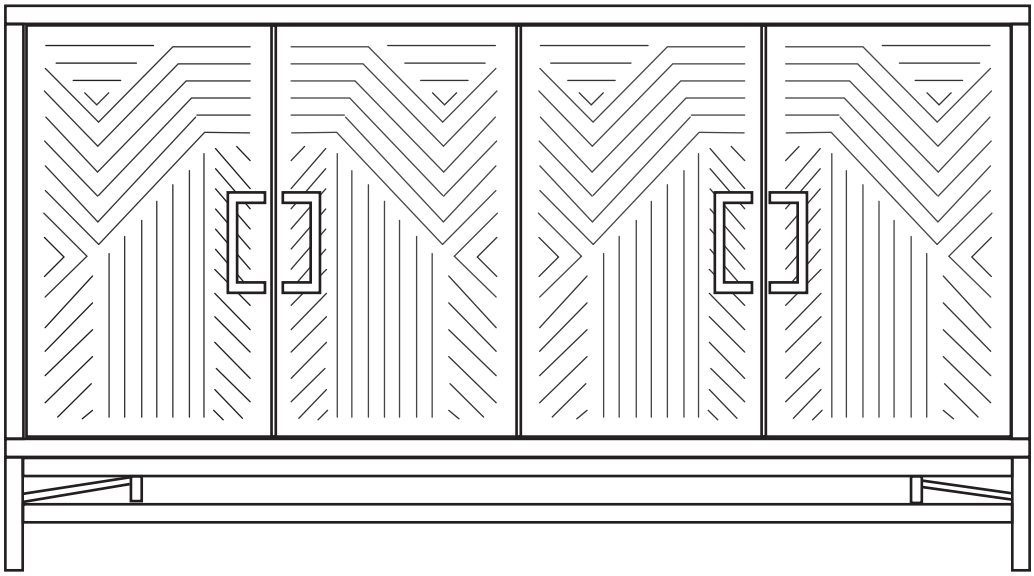

ASSEMBLY INSTRUCTION

Please read these instructions fully before starting assembly：

Tools required: Phillips screwdriver(medium & large)

1.Check you have all the components and tools listed on the following pages.

2.Remove all fittings from the plastic bags and separate them into their groups.

3.Keep children and animals away from the work area, small parts could choke if swallowed.

4.Make sure you have enough space to layout the parts before starting.

5.During assembly do not stand or put weight on the product, this could cause damage.

6.Assemble the item as close to its final position (in the same room) as possible.

7.Assemble on a soft level surface to avoid damaging the unit or your floor.

8.Parts of the assembly will be easier with 2 people.

9.To reduce the likelihood of damaging your product please ensure that your power drill is set on a low torque setting.

10.Assemble all parts and bolts loosely during assembly, only once the product is complete should you fully tighten the bolts.

11.Regularly check and ensure That all bolts and fittings are tightend properly.

12.Please do not place items that exceed the load capacity.

Care and maintenance

Only clean using a damp cloth and mild detergent,
do no use bleach or abrasive cleaners.

ASSEMBLY INSTRUCTION

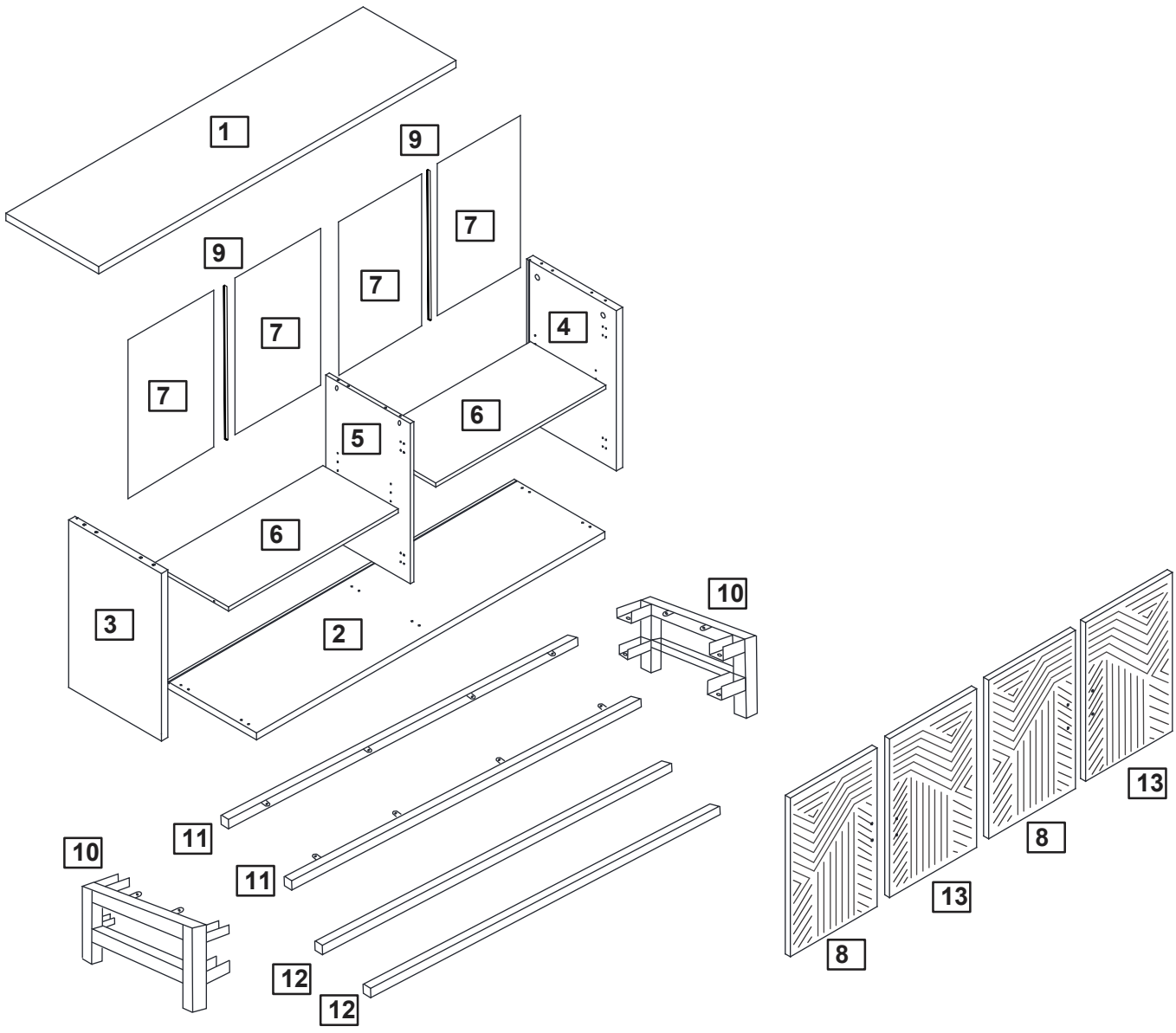

Part List

Please check you have all the panels listed below

Note: The quantities below are the correct amount to complete the assembly. In some cases more fittings may be supplied than are required.

① 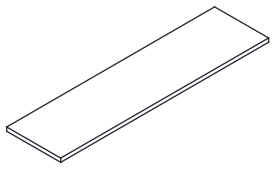 Top Panel 1 PC	② 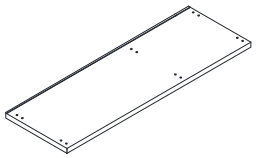 Bottom Panel 1 PC	③ 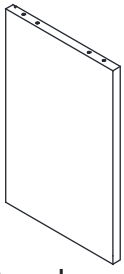 Left Panel 1 PC	④ 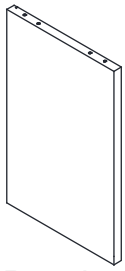 Right Panel 1 PC
⑤ 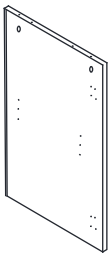 Medial panel 1 PC	⑥ 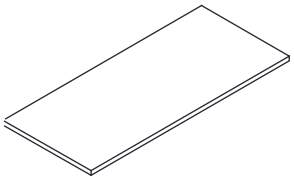 Center Shelf 2PCS	⑦ 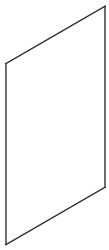 Center Shelf 4 PCS	⑧  Left Door 2PCS
⑨ 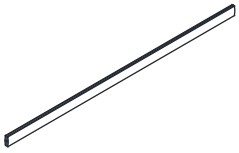 Rear panel 2 PCS	⑩ 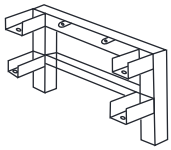 Foot part 2 PCS	⑪ 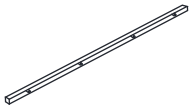 Foot part 2PCS	⑫ 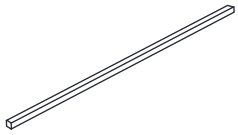 Foot part 2PCS
⑬  Right Door 2 PCS			

Hardware list

Please check you have all the panels listed below

Note: The quantities below are the correct amount to complete the assembly. In some cases more fittings may be supplied than are required.

A  Male Camlock x 6	**B**  Female Camlock x 6	**C**  Dowel x 12	**D**  5*60mm Screw x 6
E  E x 1	**F** 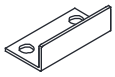 collision x 2	**G** 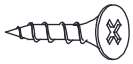 3*14mm Screw x 12	**H**  8*15mm Screw x 4
I 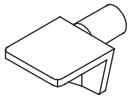 Shelf Support Pin x 8	**J**  6*12mm Screw x 8	**K** 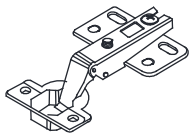 Door Hinge x 4	**S** 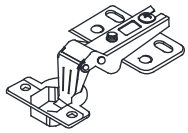 Door Hinge x 4
M  4*14mm Screw x 56	**N** 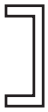 Handlex 4	**O**  6*28mm Screw x 8	**P** 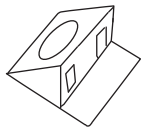 Plasticwedge x 8

Hardware list

Please check you have all the panels listed below

Note: The quantities below are the correct amount to complete the assembly. In some cases more fittings may be supplied than are required.

T  Tx1	**R**  Rx4	**Q** 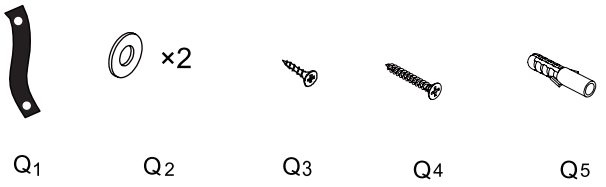 Q_1 Q_2 Q_3 Q_4 Q_5 Wall Fixing Pack x 2

ASSEMBLY INSTRUCTION

Step 1

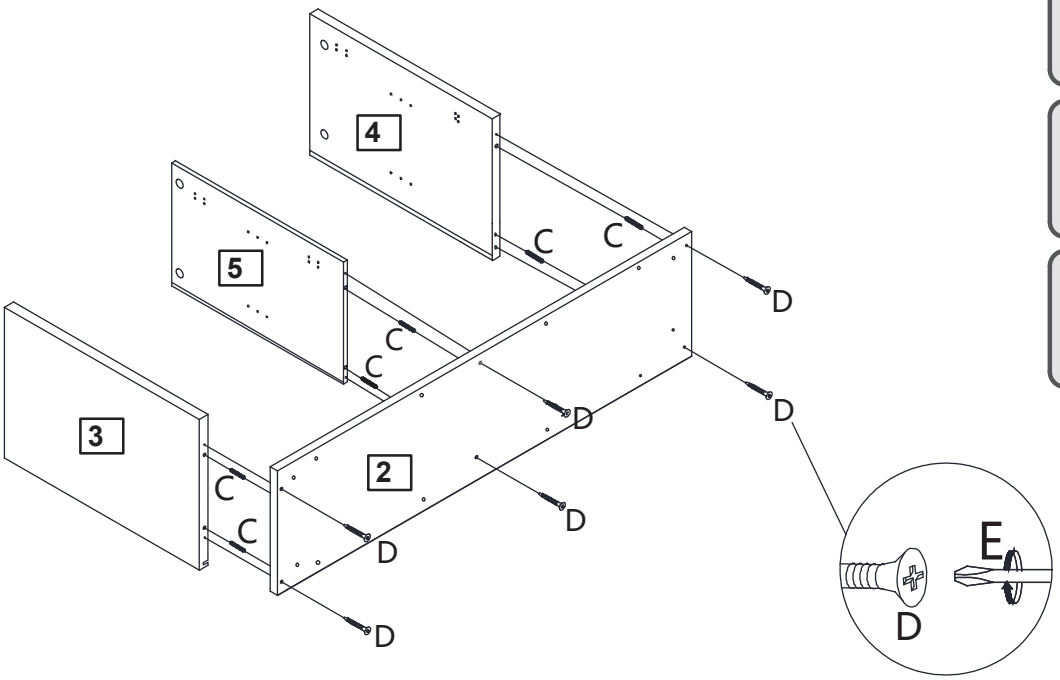

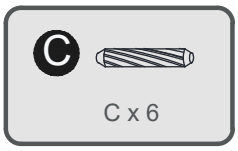

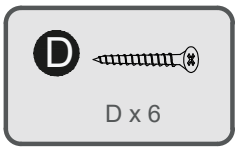

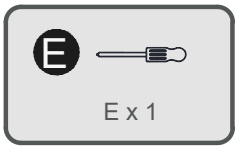

Step 2

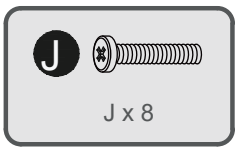

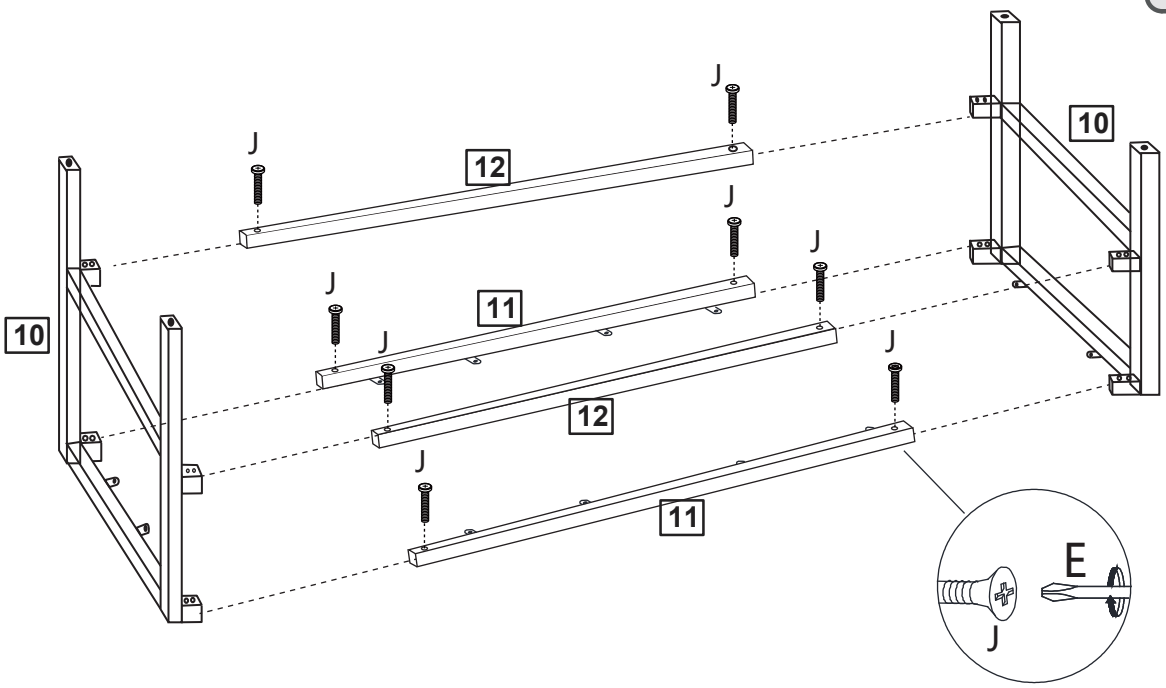

ASSEMBLY INSTRUCTION

Step 3

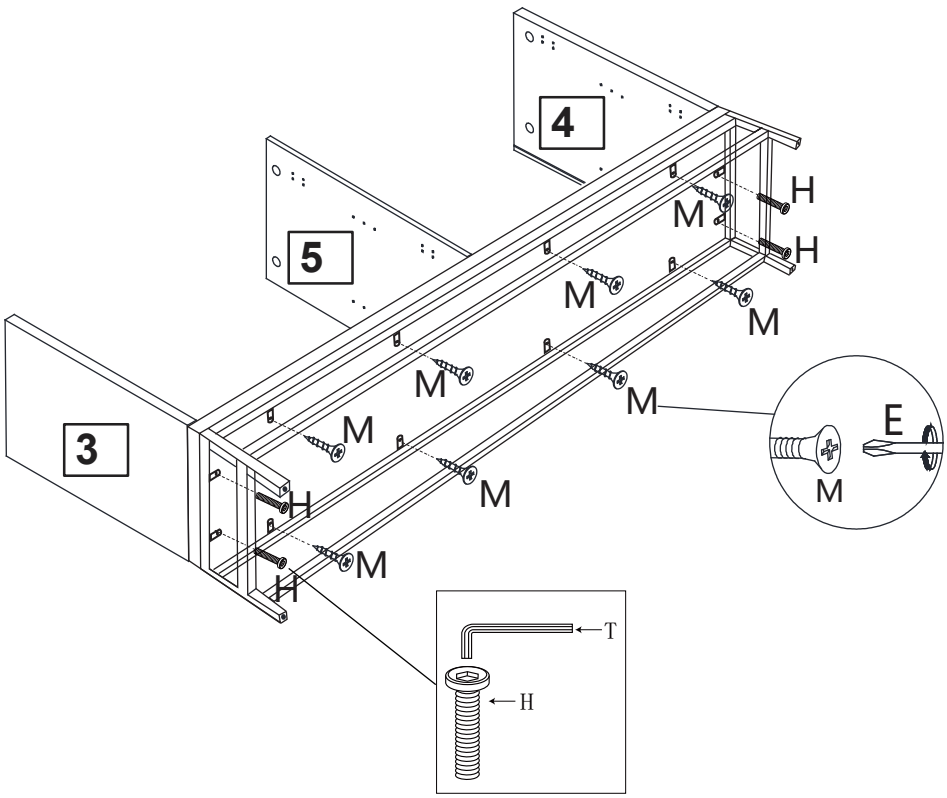

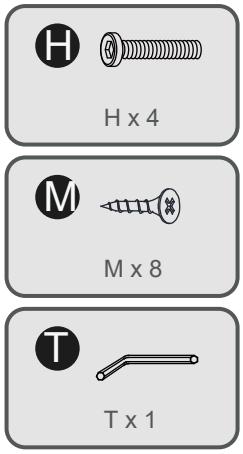

Step 4

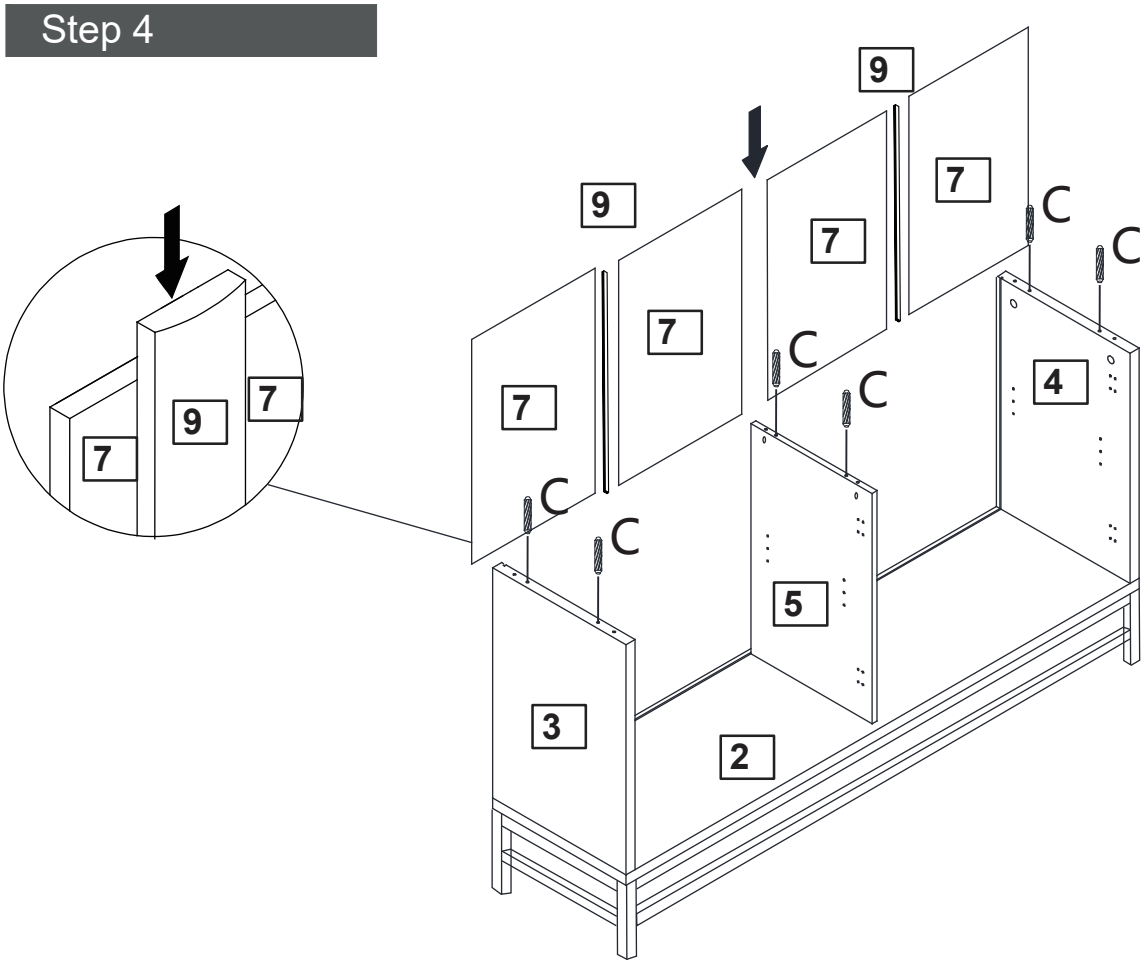

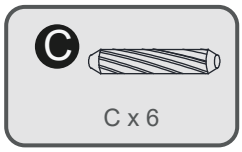

ASSEMBLY INSTRUCTION

Step 5

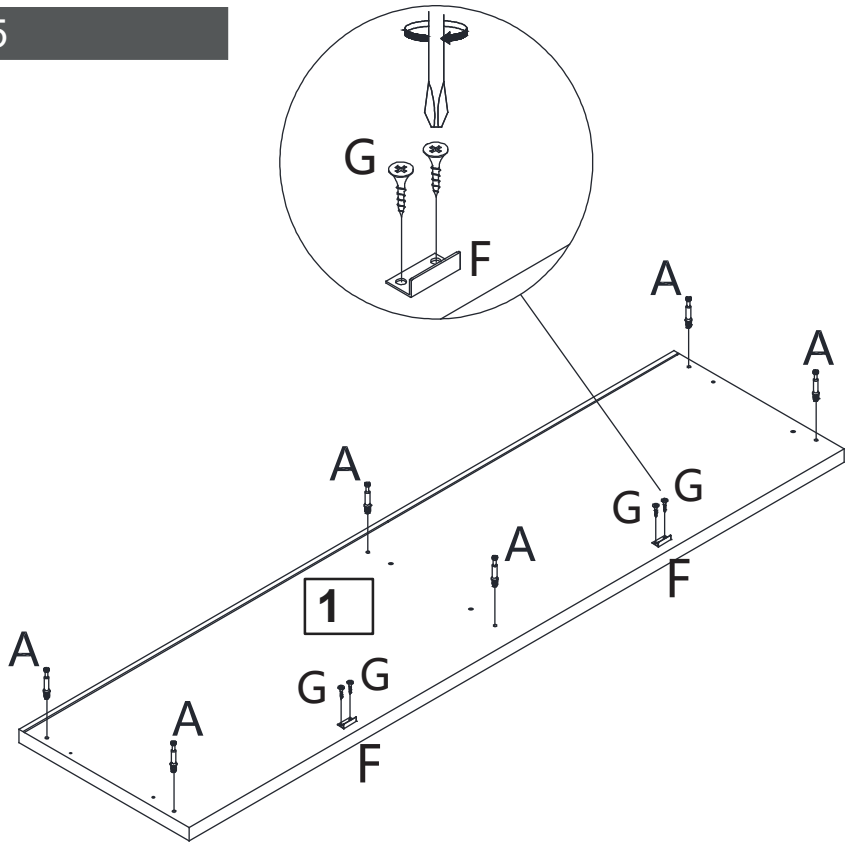

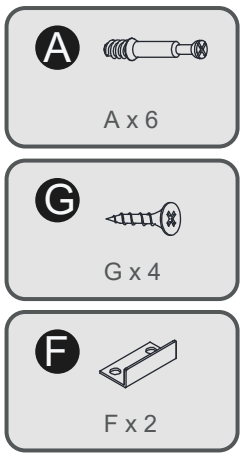

Step 6

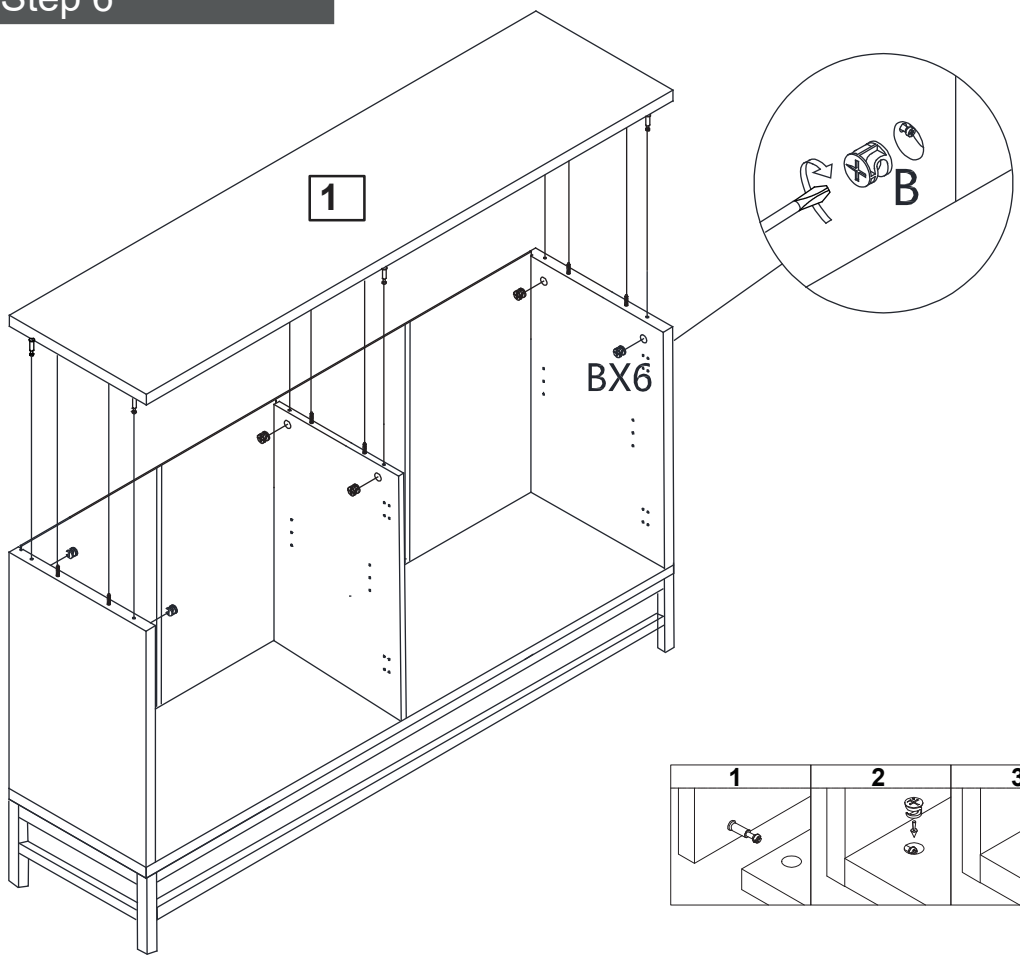

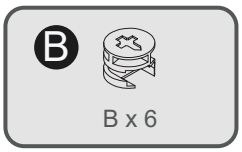

ASSEMBLY INSTRUCTION

Step 7

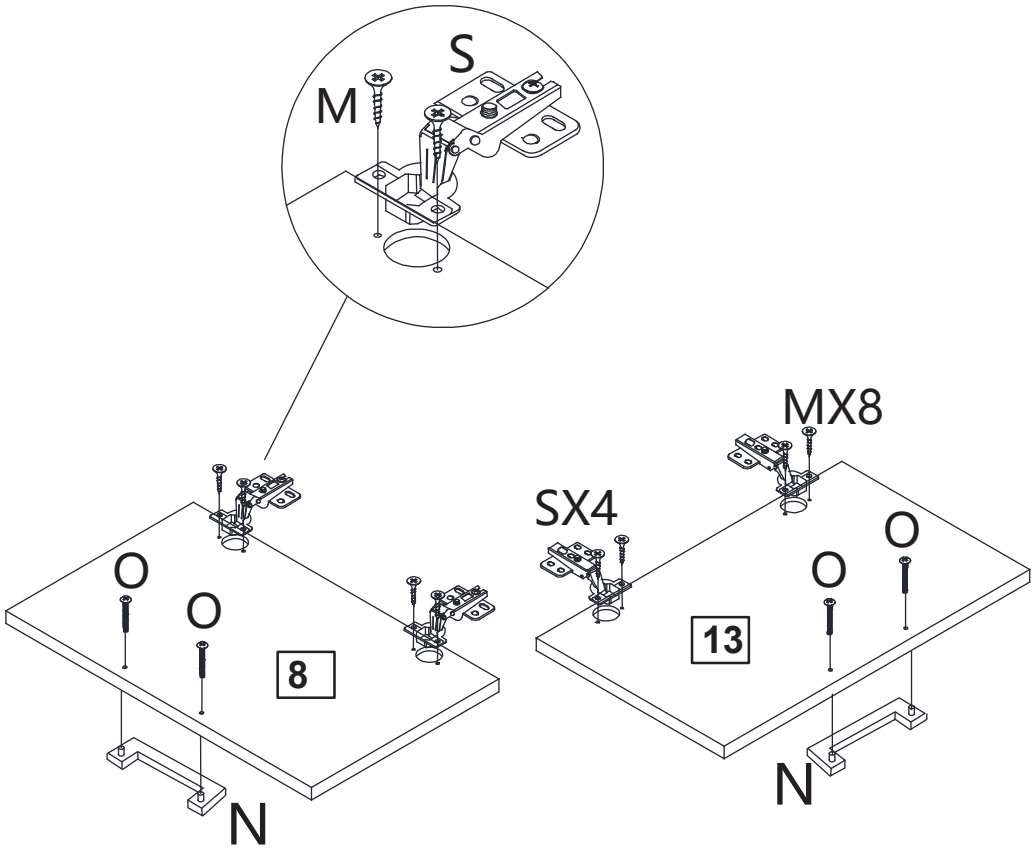

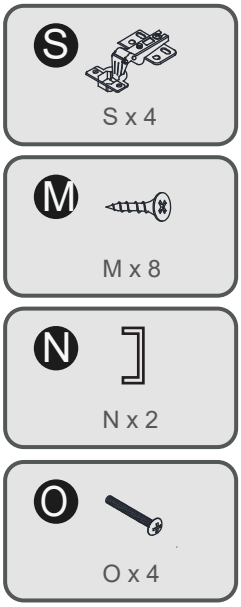

Step 8

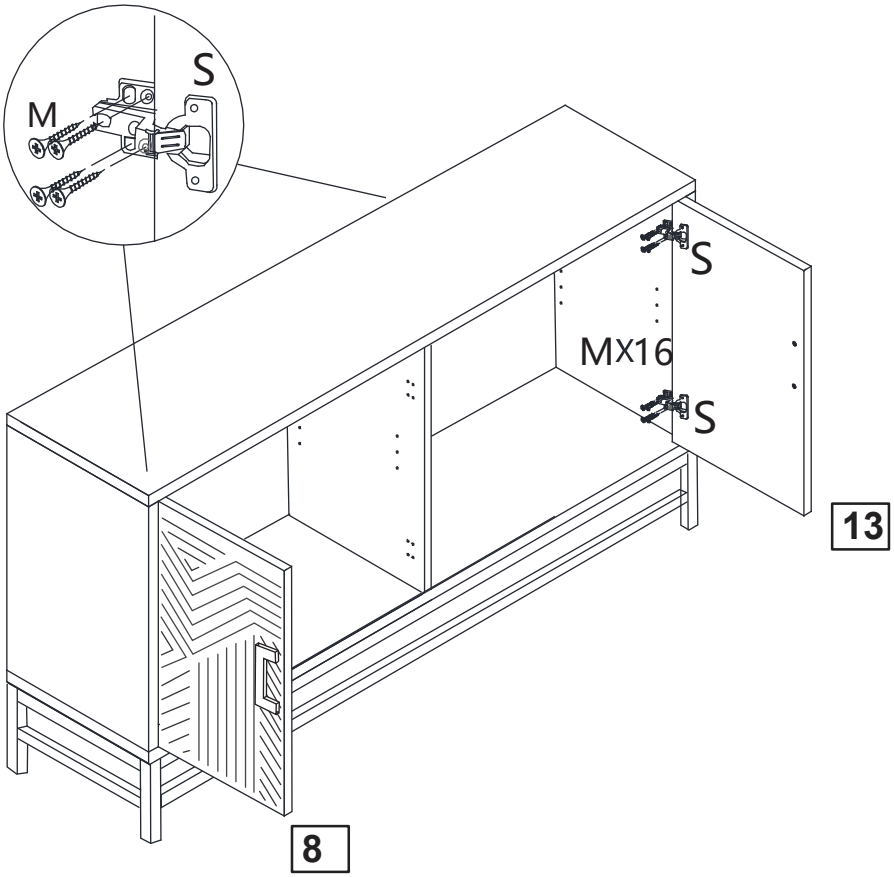

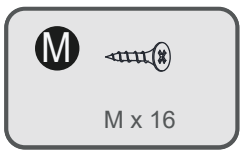

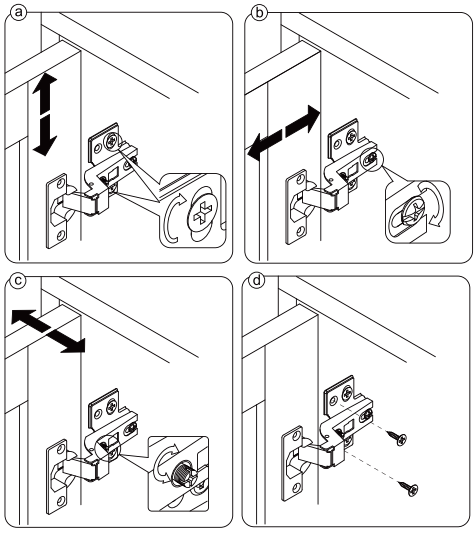

ASSEMBLY INSTRUCTION

Step 9

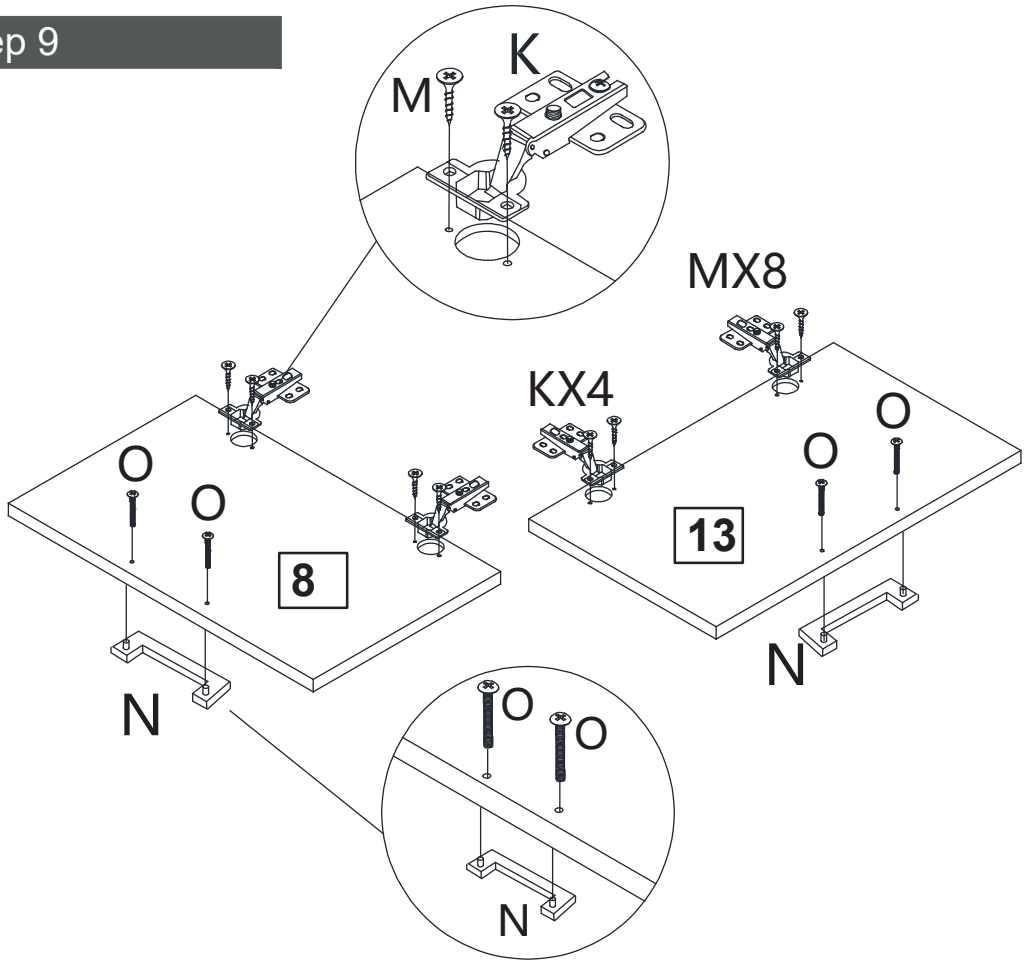

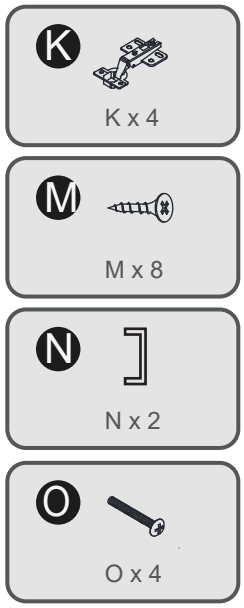

Step 10

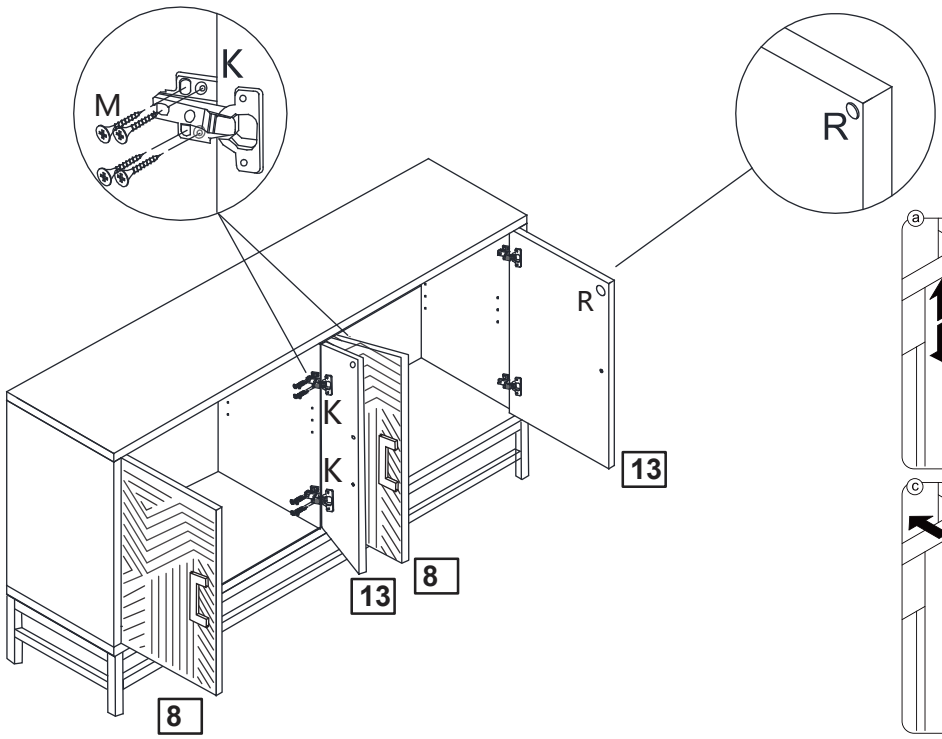

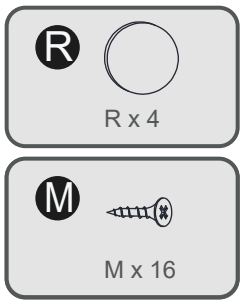

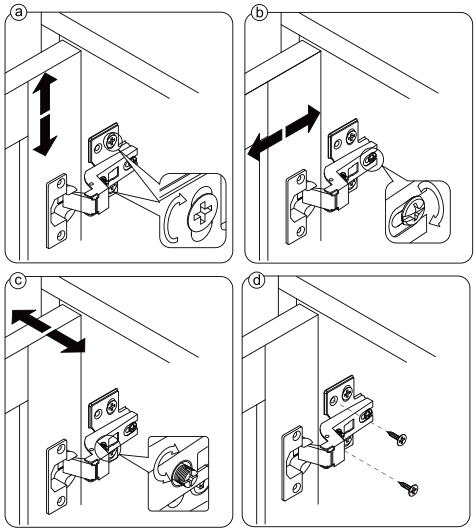

ASSEMBLY INSTRUCTION

Step 11

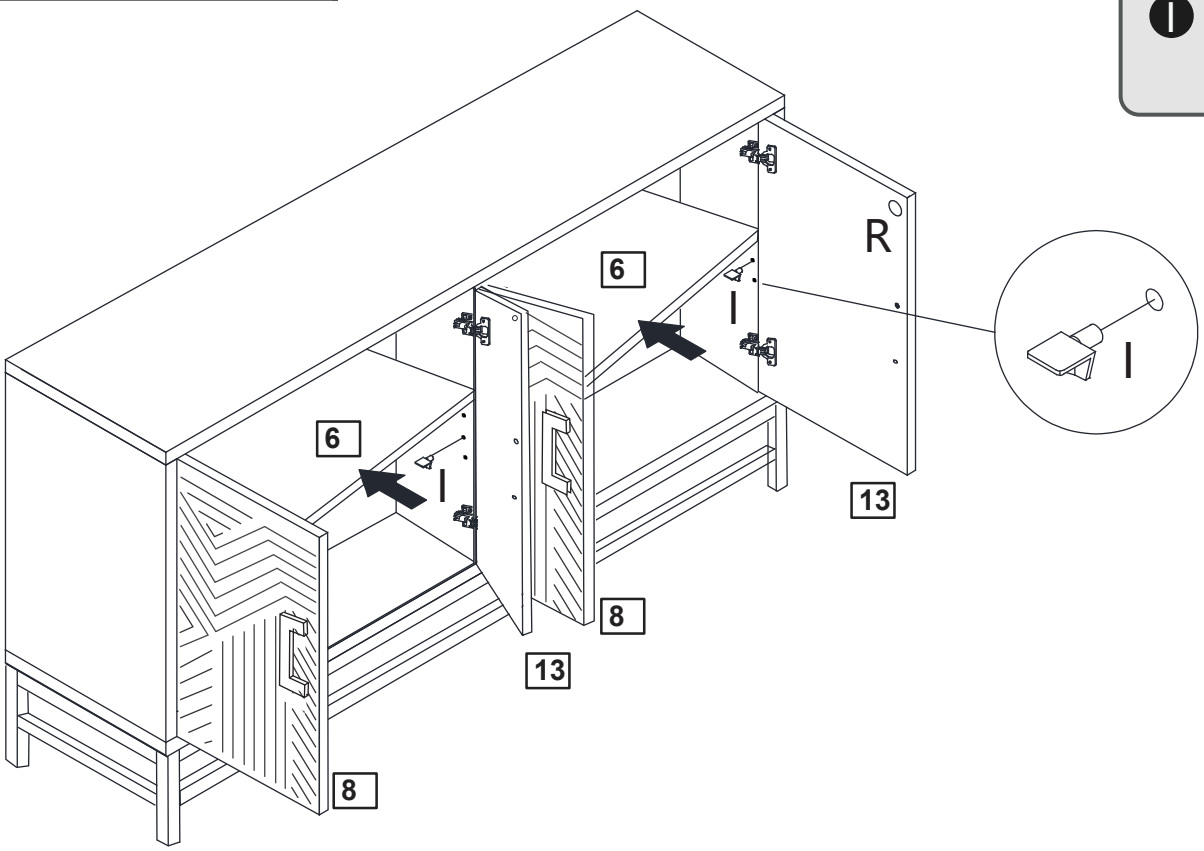

Step 12

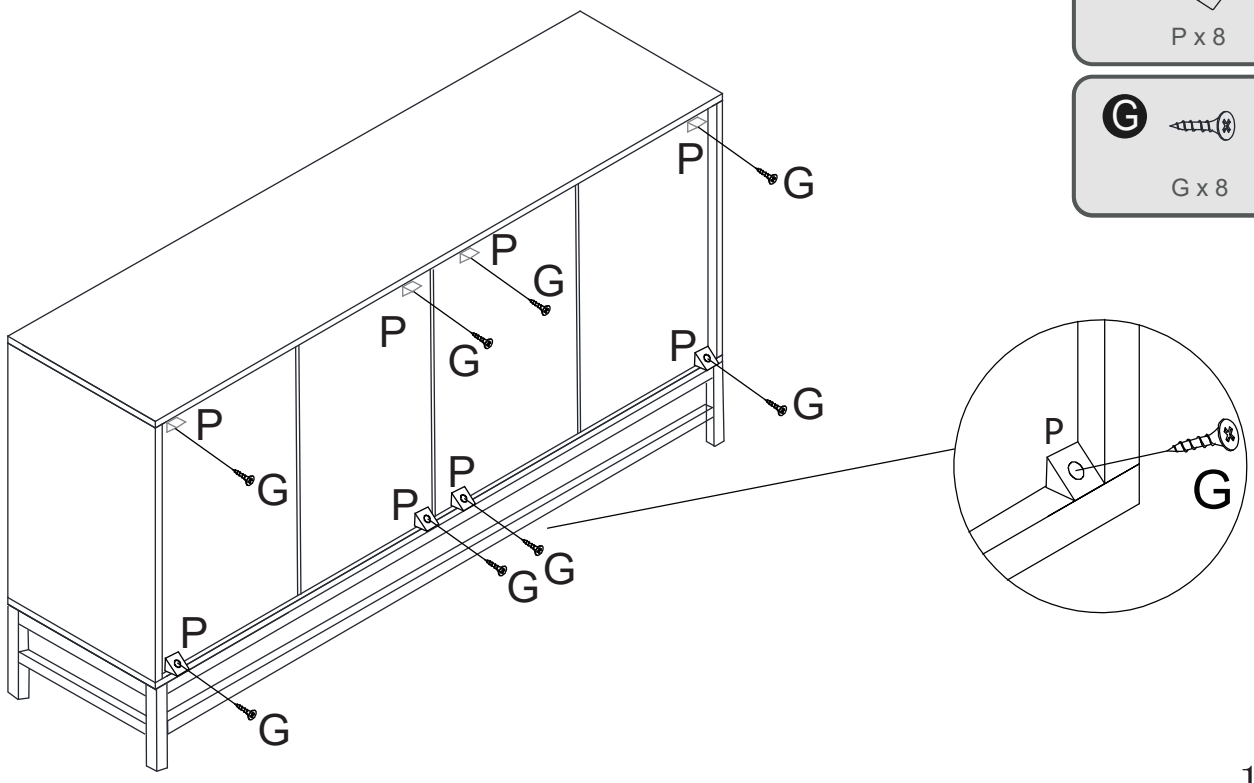

ASSEMBLY INSTRUCTION

Step 13

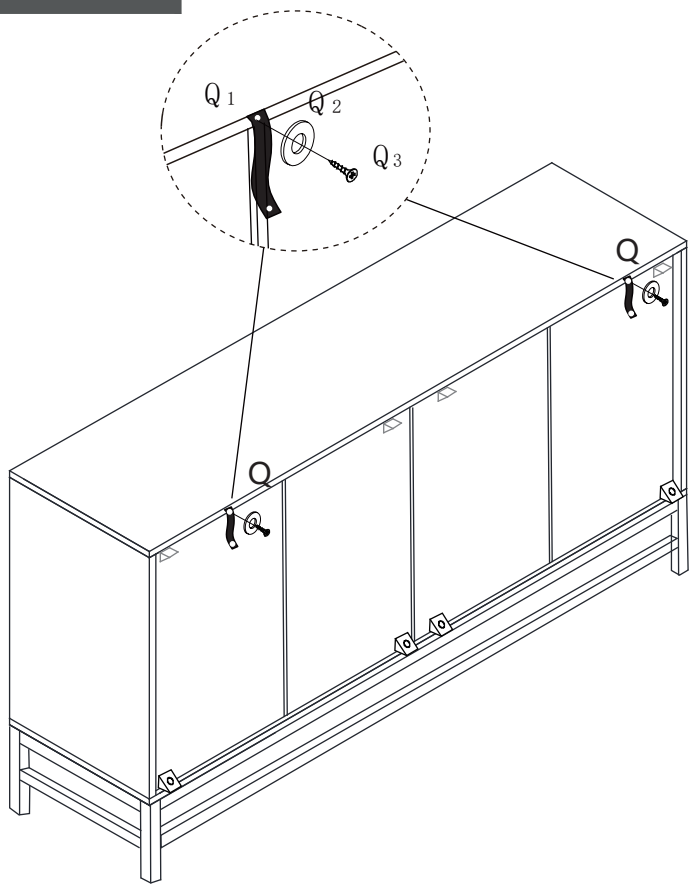

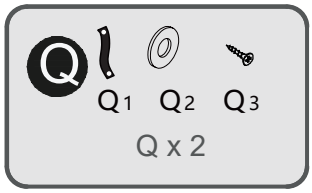

Step 14

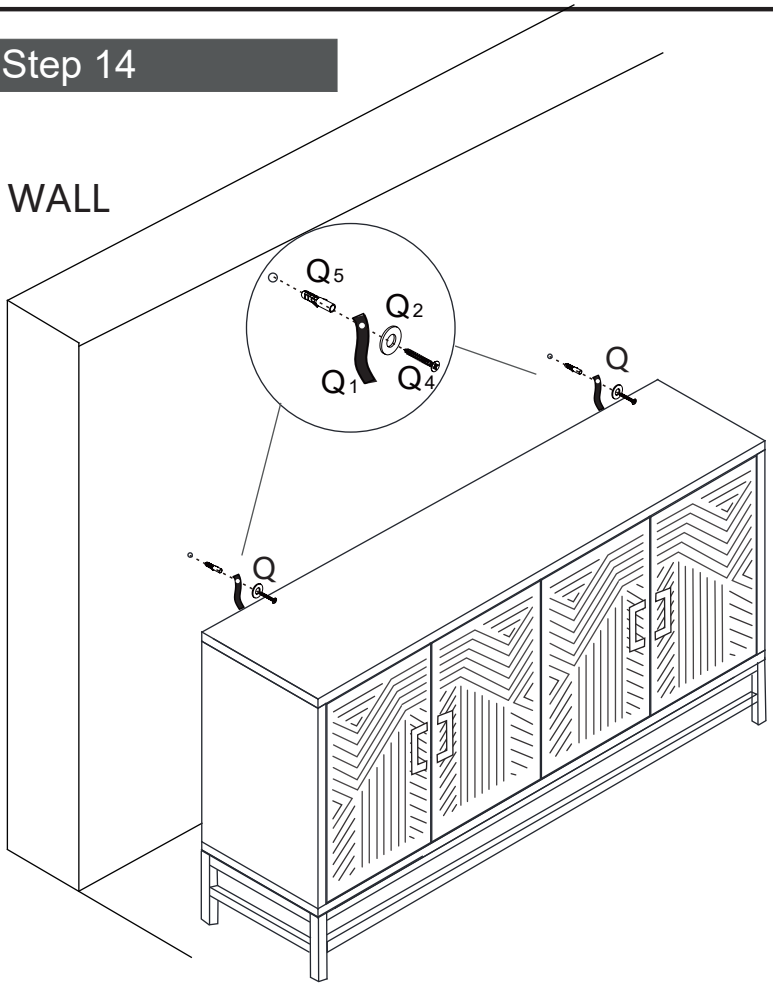

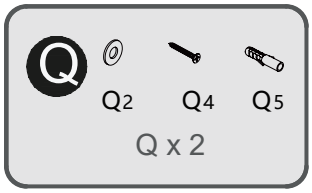

Assembly is complete.

ASSEMBLY INSTRUCTION

Assembly Steps(EN) / Montageschritte(DE)

HOW TO ADJUST THE HINGES TO ALIGN THE DOORS IF NEEDED.

STEP 1

Open the door.

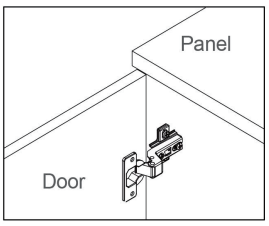

STEP 2

Adjust the door panelsupward or downward

1.

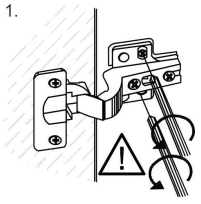

Unscrew 2 screws in round holes loosen 2 screws in oval holes a bit.

2.

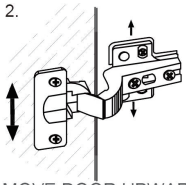

MOVE DOOR UPWARD OR DOWNWARD

3.

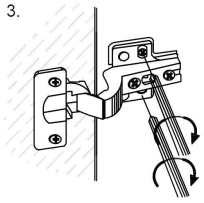

Tighten 2 screws in oval holes. Screw in 2 screws in round holes

STEP 3

Adjust the flush between door panel and side panel

1.

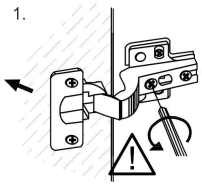

MOVE DOOR OUTWARD by turning this screw counter-clockwise

2.

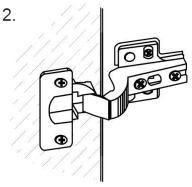

KEEP DOOR IN RIGHT POSITION

3.

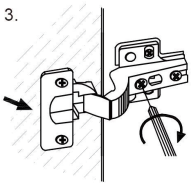

MOVE DOOR OUTWARD by turning this screw clockwise

STEP 4

Adjust the Gap beteen door panel and side panel

1.

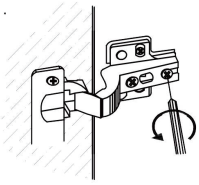

Loosen this screw a bit.

2.

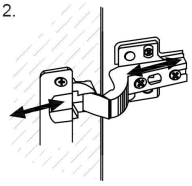

MOVE DOOR BACK OR FORTH

3.

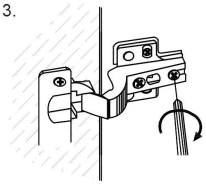

Re-tighten this screw.