Assembly Instructions

LOVESEAT

CAUTION: You must read this Assembly Instructions before you proceed.

Please look in Seat Panel for hardware packs

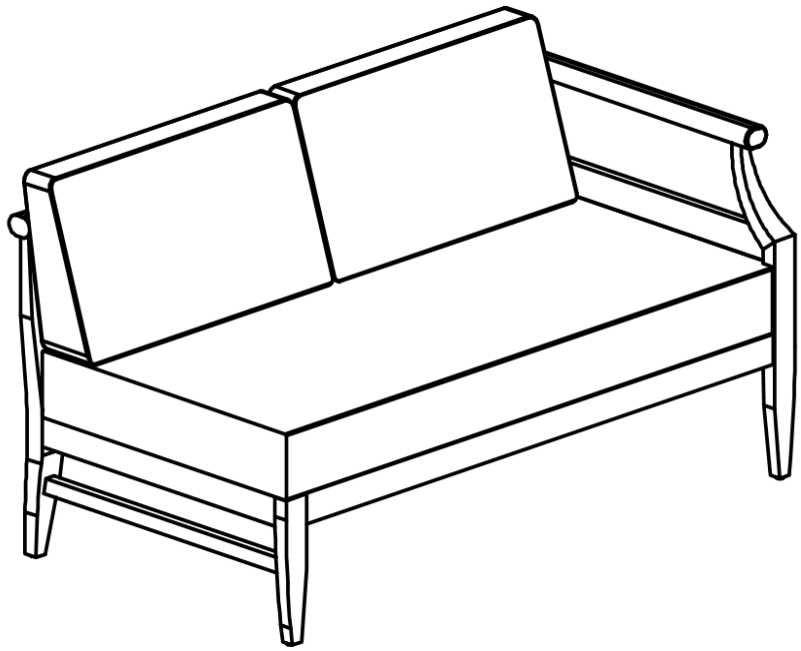

CAUTION: This Loveseat is NOT a TOY.
Keep your child / children at bay in the process of assembly.
For turning the Loveseat and to prevent any possible damage to the Loveseat, 2 persons may be needed to execute this action.

Parts List

Label	Picture	Description	Qty
A		Right Leg Panel With Pre-installed Levellers	**1**
B		Left Leg Panel With Pre-installed Levellers	**1**
C	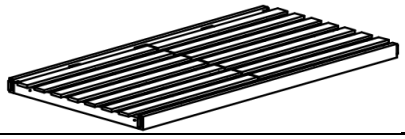	Seat Panel	**1**
D	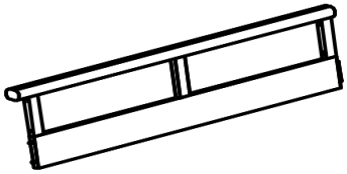	Backrest Panel	**1**
E	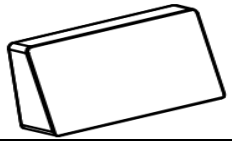	Back Cushion	**2**
F	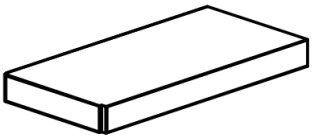	Seat Cushion	**1**

Hardware

Label	Picture	Description	Qty
①		Bolt (M6*50mm)	9
②		Allen Wrench	1

Assembly Preparation

Before Beginning Assembly:

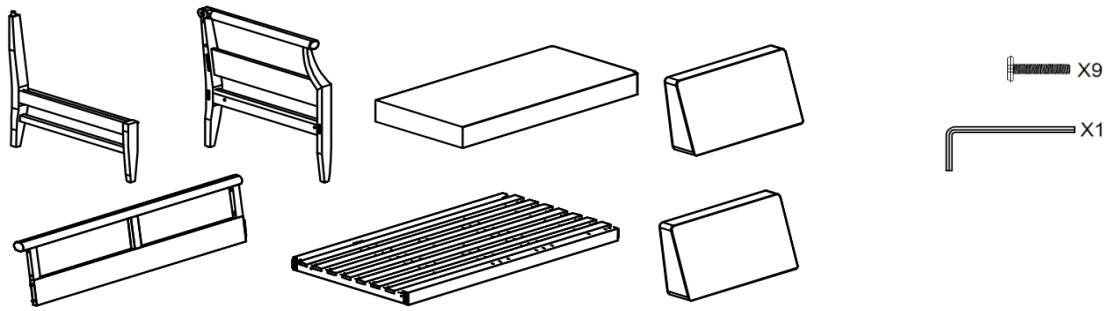

- **Read instruction, cover to cover-**
- **Have 2 adults on hand for assembly-**
- **Do not assembly on flooring or carpet-**
- **Assemble on a clena non- marring surface (packing foam)-**
- **Save all packaging until finished-**

Assembly Steps

OVERVIEW

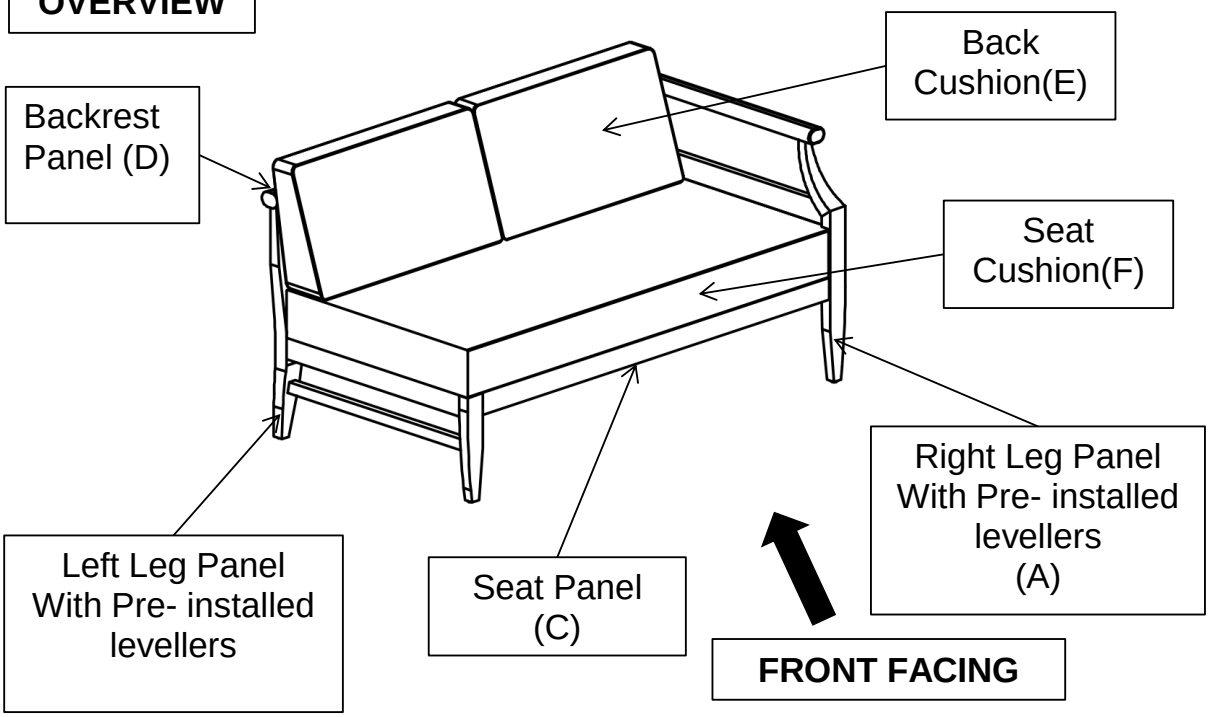

This Loveseat has multiple parts and may require up to some 30 minutes to assemble. To give you an overview, the above picture is to help you put the various parts into perspective. Please read through the instructions here below to familiarise yourself with the parts and steps before assembly.

Step 1

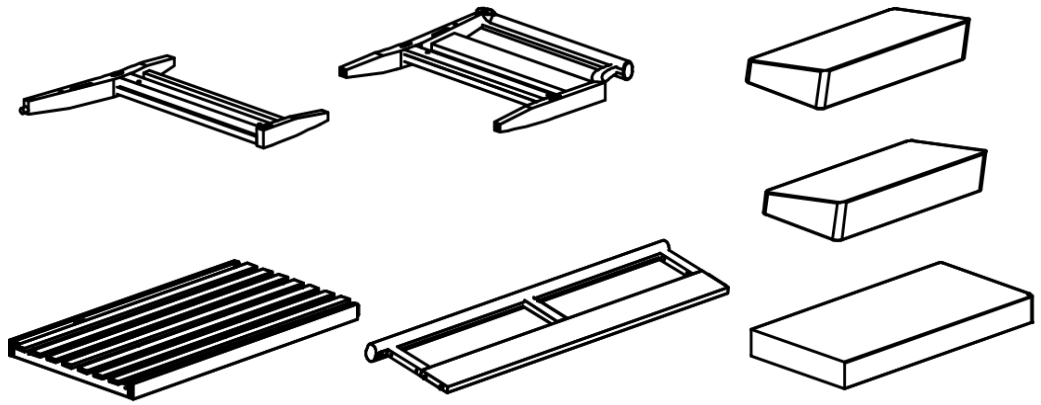

Unpack and place all parts on a clean, non-marring surface.

Step 2

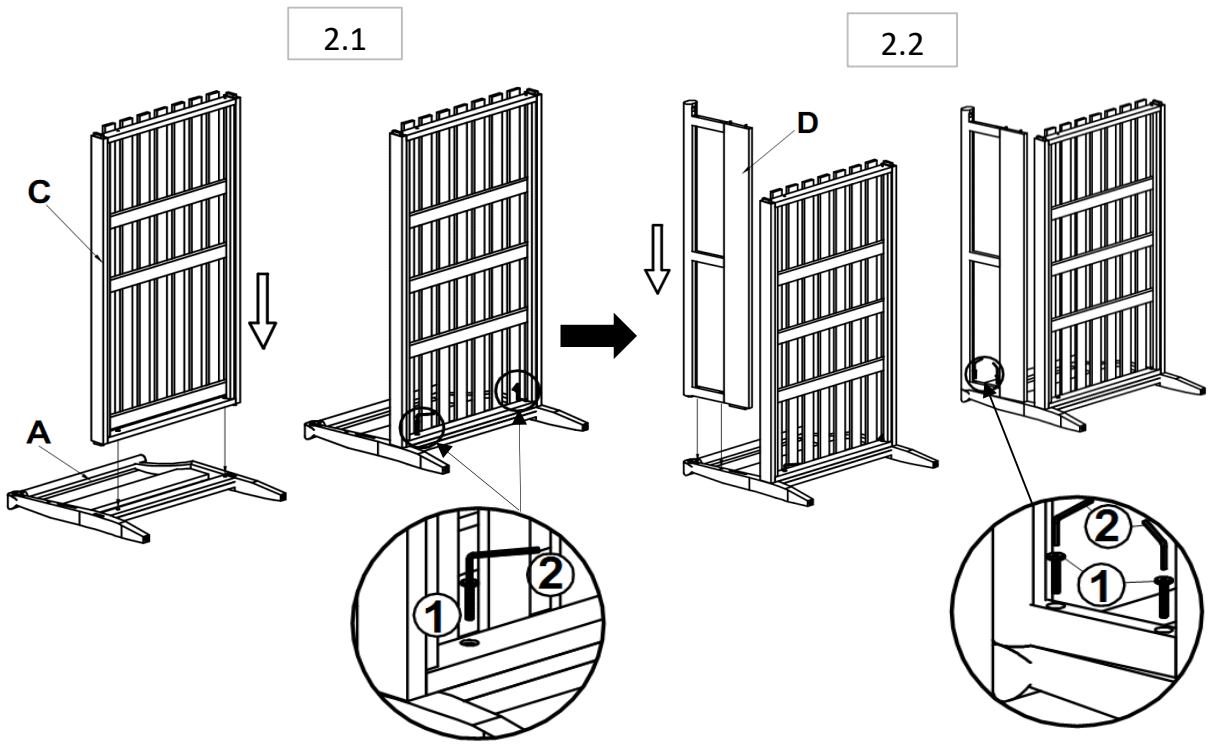

2.1 With assistance from your adult partner, attach the Seat Panel(C) to the Right Leg Panel (A) using 2 Bolts(①) and the Allen Wrench(②) as shown in the above picture.
2.2 Attach the Backrest Panel(D) to the Right Leg Panel (A) using a Bolt (①) and the Allen Wrench(②) as shown above.**DO NOT fully tighten the Bolts at this time**.

Step 3

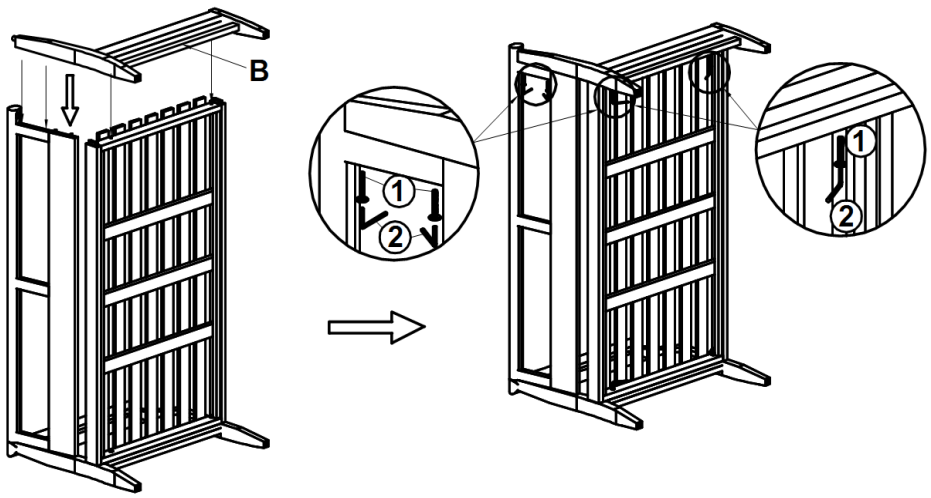

With assistance from your adult partner, position the Left Leg Panel (B) to the Seat Panel(C) and the Backrest Panel(D) as shown in the above picture.
Then repeat the same process of Step 2 to secure the Left Leg Panel (B) to the Seat Panel(C) using 2 Bolts(①) and the Allen Wrench(②).
Then secure the Left Leg Panel (B) to the Backrest Panel(D) using a Bolt(①) and the Allen Wrench(②).
DO NOT fully tighten the Bolts at this time.

Step 4

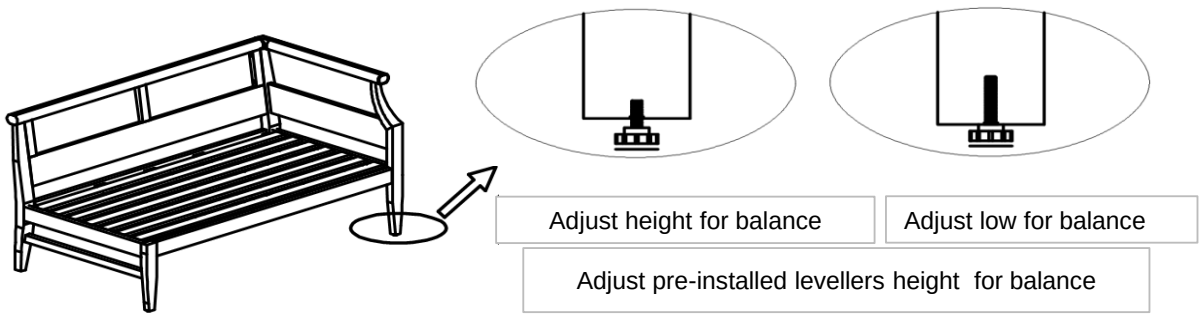

Stand the Loveseat up, and with assistance from your adult partner,
Exert pressure floorwards, onto the Loveseat with both your hands.
This pressure will help the Legs and Loveseat reach full alignment status.
Check for wobbles on a LEVEL surface.
If no wobbles are found proceed to tighten all Bolts in a sequential manner, until evenly secured.
When tightening the Bolts tighten sequentially.
DO NOT tighten any Bolt fully and then move on towards the next one.
If there are still wobbles, loosen the Bolts and execute the same above process.
Adjust the Levelers to the desired height to avoid wobbles.
To adjust the Levellers, get assistance from an adult partner to lift/lean and hold the Loveseat while you are working.

Step 5

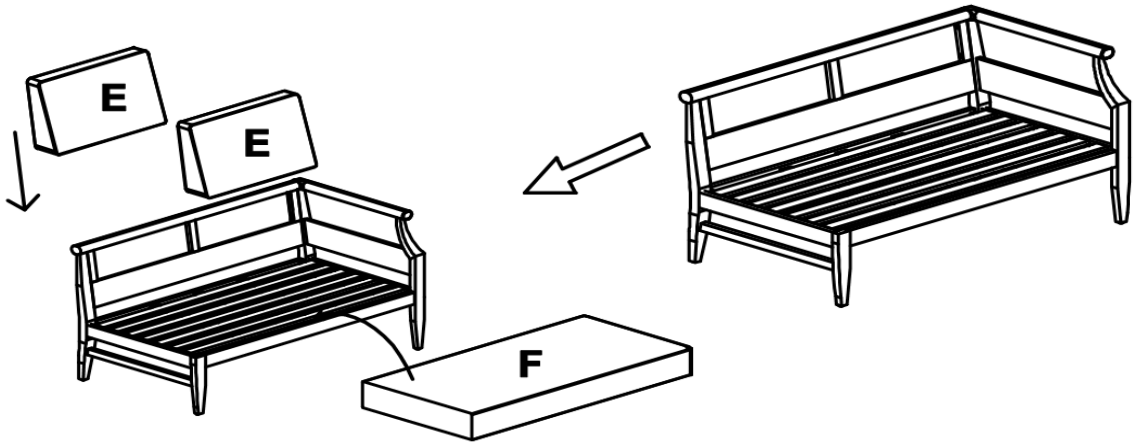

Place the Seat Cushion(F) and the Back Cushions(E) onto the Loveseat as shown in the above picture.

Step 6

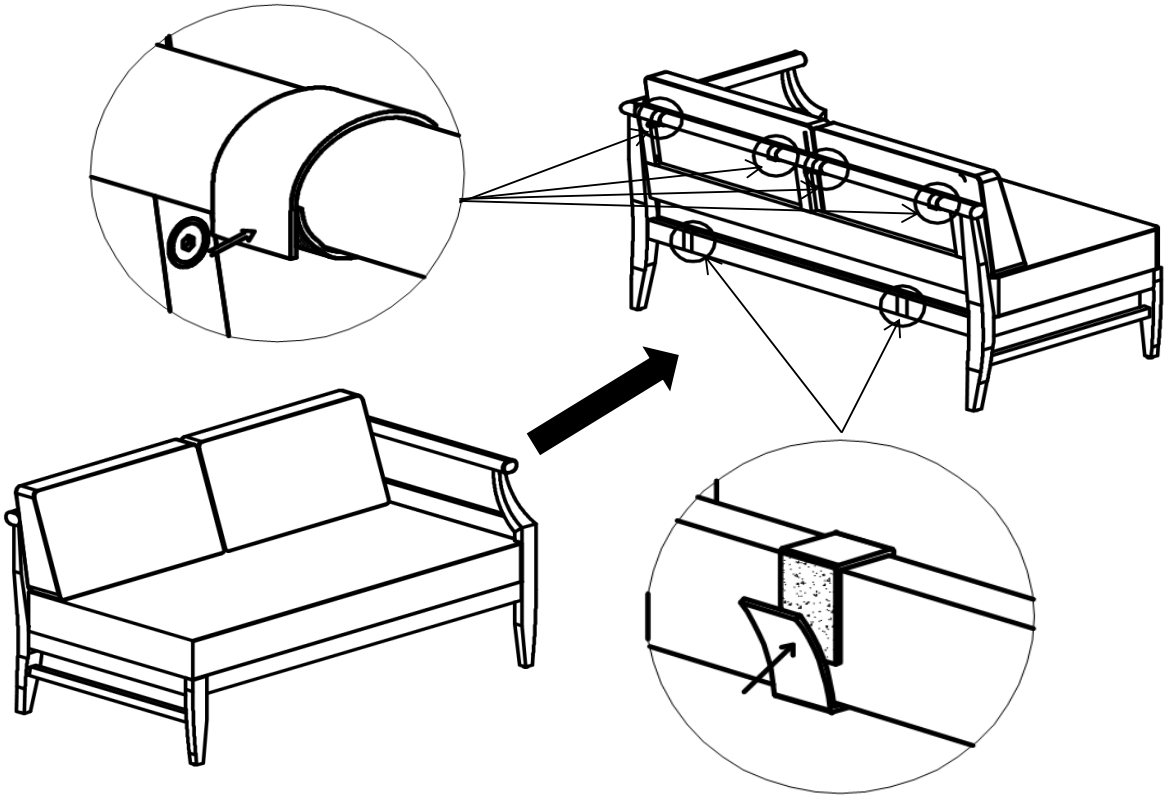

Connect the magic tape straps of the Back Cushions(E) and the Seat Cushions(F) to the Backrest Panel(D) and the Seat Panel(C) as shown in the above picture.
Your Loveseat is ready for use.
This Loveseat can only be used on a flat, level surface.

Step 7

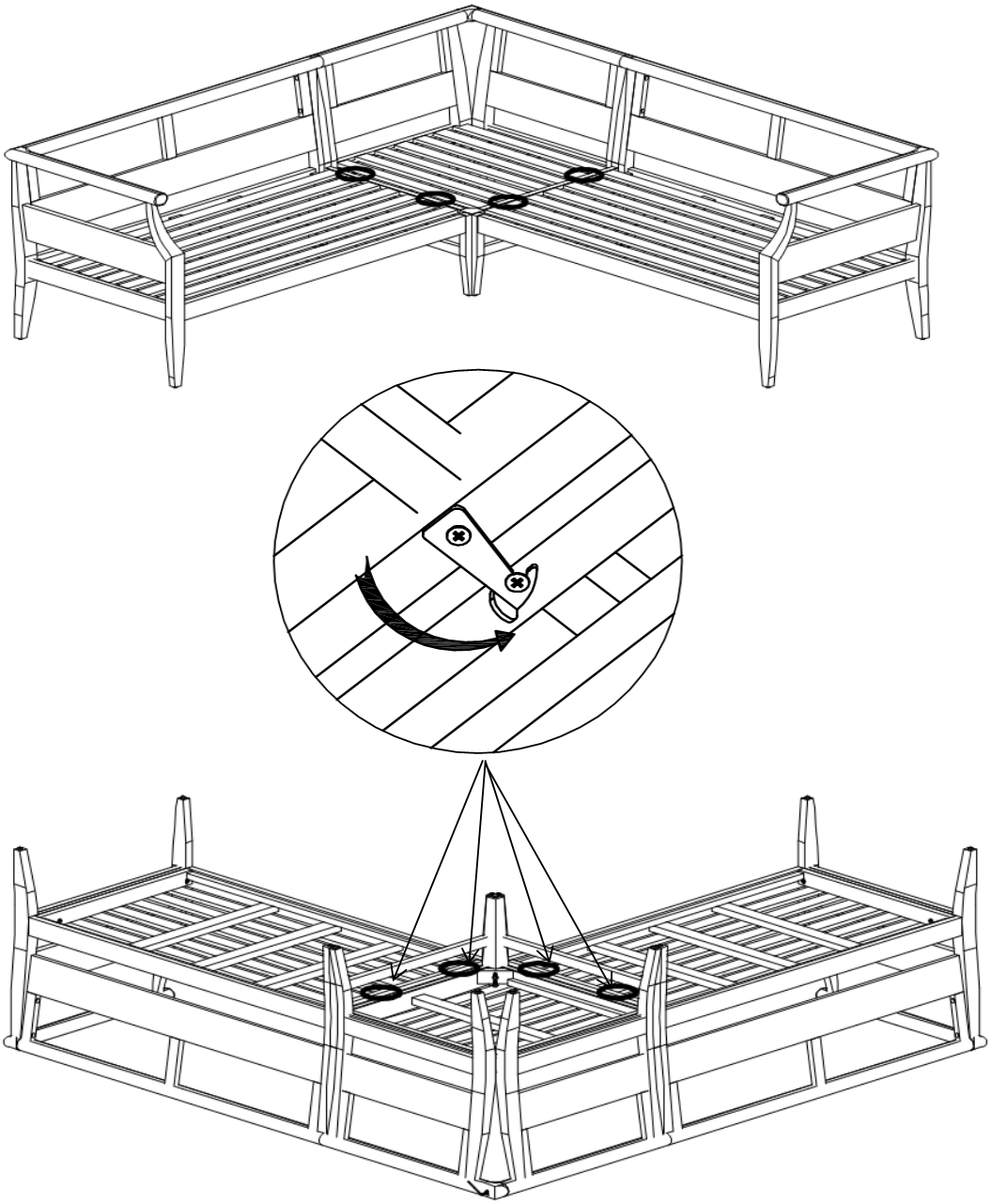

Note: This step is optional in the case you may want to connect all seats in a set together and should be done before placing cushions.
With assistance from your adult partners, turn the seats upside down and use the pre-fixed clips to connect the seats together.

Care &Maintenance

- ⊘ Do not put hot items directly on furniture surface.
- ⊘ Do not clean furniture with harsh cleansers or polish.
- ✓ To obtain the longest lifespan of your outdoor prodcts, minimizing exposure to direct sunlight is recommended.
- ⊘ Children should not climb or jump on the furniture.
- ⊘ Do not write on furniture without a padded barrier to protect the surface.
- ✓ To obtain the longest lifespan of your outdoor products, avoid extended and lengthy exposure to rain, snow, and direct sunshine. Whenever possible cover the product and /or place under patio or awnings.
- ⊘ Not for commercial use. For residential use only.
- ⊘ Stains may be removed with mild soap solution and damp cloth.
- ✓ Dust and pick-up spills using a clean, non-colored, lint-free cloth .