Installation Steps：

①

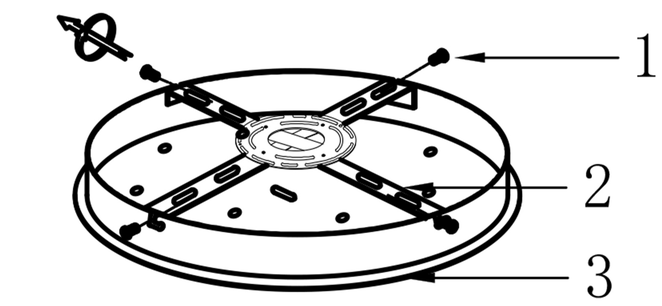

1.Loosen the four screws of the hanging plate and remove the hanging plate.

②

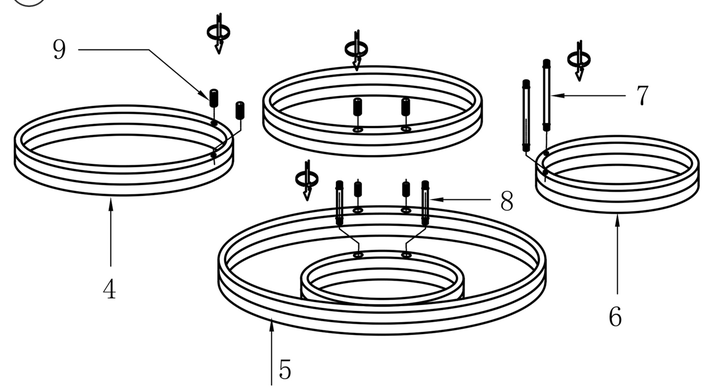

2.Screw the tube(7/8/9) attached to the lamp body onto the lamp body and screw the same length of tube from the kit onto the corresponding lamp body.

③

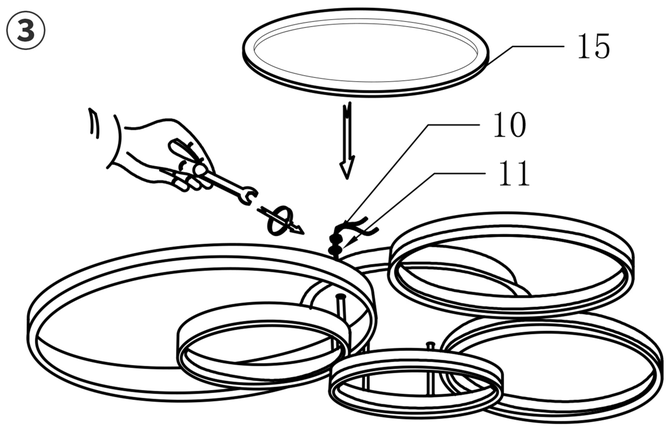

1.Secure the light body to the chassis with spring washers(11) and nuts(10).
2.Wrap the acrylic circle(15)to the chassis.

④

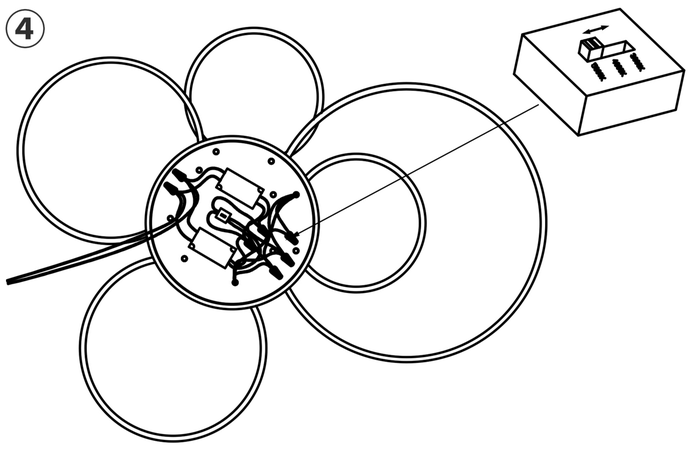

1.With an external power cord connected to the lamp body power cord (fire wire to the black wire) (zero wire to the white wire) to make the lamp body light up.
2.Then use the dimmer button, choose your favorite color temperature.
3.Turn off the power and remove the external power cord.

⑤

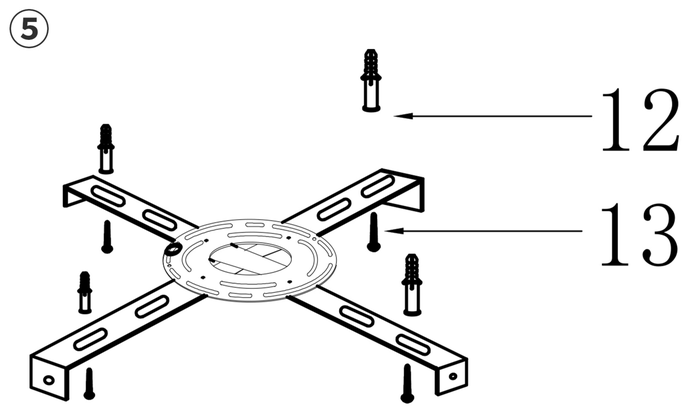

1. According to the distance between the holes of the wall plate to fix the four anchors(12) on the wall.
2. Use four screws(13) to fix the wall plate to the anchors.

⑥

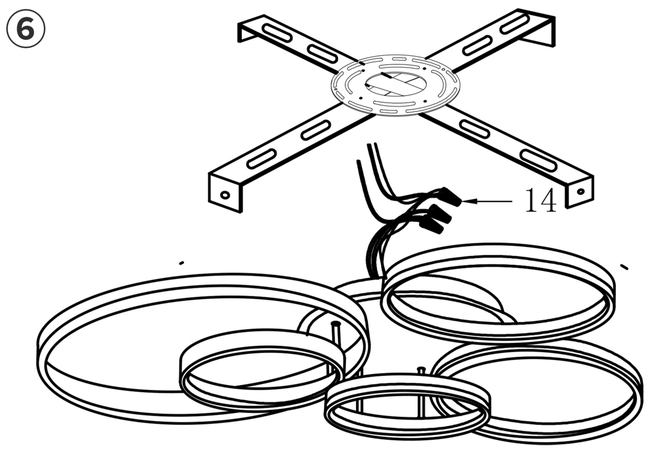

6.Use three P3 wiring caps(14) to connect the power cord to the lamp body wires.(black to black) (white to white) (ground to ground).

⑦

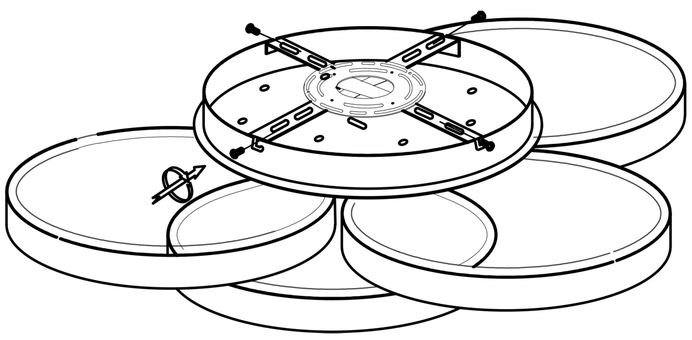

7.Secure the light body to the hanging plate with four screws

Notice： This light fixture should be installed in accordance with all applicable, local installation codes, and by a person familiar with the construction and operation of it, as well as the hazards involved. Inspect items andcontents carefully. If any damage or defect is found, do not install it.

Accessories：

1:14mm/Screws*4		2:Mounting Plate*1	
3:Canopy*1		4:400*40mm Aluminum Ring*2	
5:500*40mm Aluminum Ring*1		6:300*40mm Aluminum Ring*2	
7:125mm/Tube*2		8:75mm/Tube*2	
9:20mm/Tube*6		10:Nut*10	
11:Spring Washer*11		12:Anchors*4	
13:Screws*4		14:Wiring Cap*3	
15:Acrylic Circle*1			