MODERN EXTENDABLE DINING TABLE SPECIFICATIONS

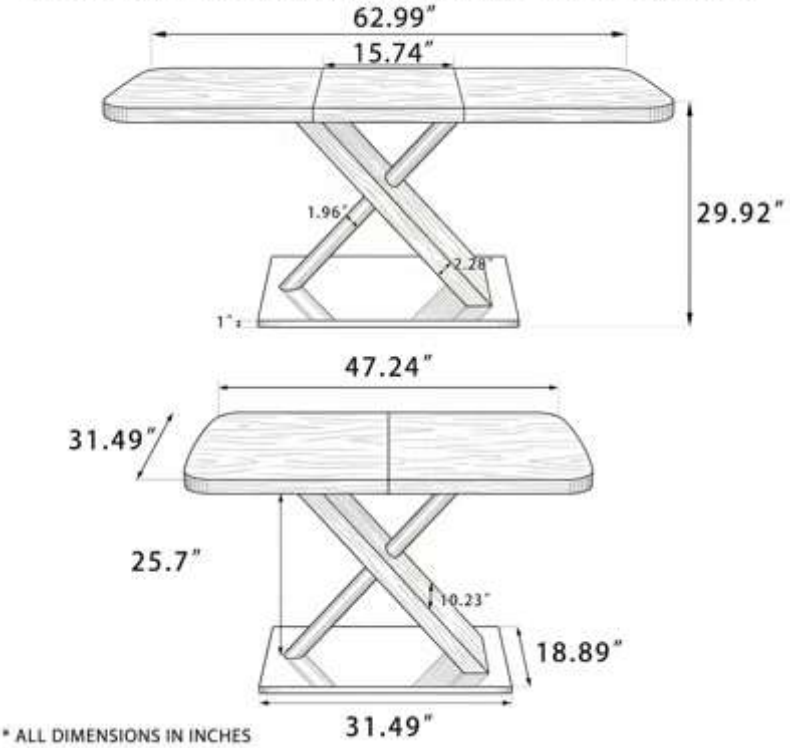

* ALL DIMENSIONS IN INCHES