# ASSEMBLY INSTRUCTIONS
# 36 INCH BATH VANITY-CABINET
# SKU:N725P532869

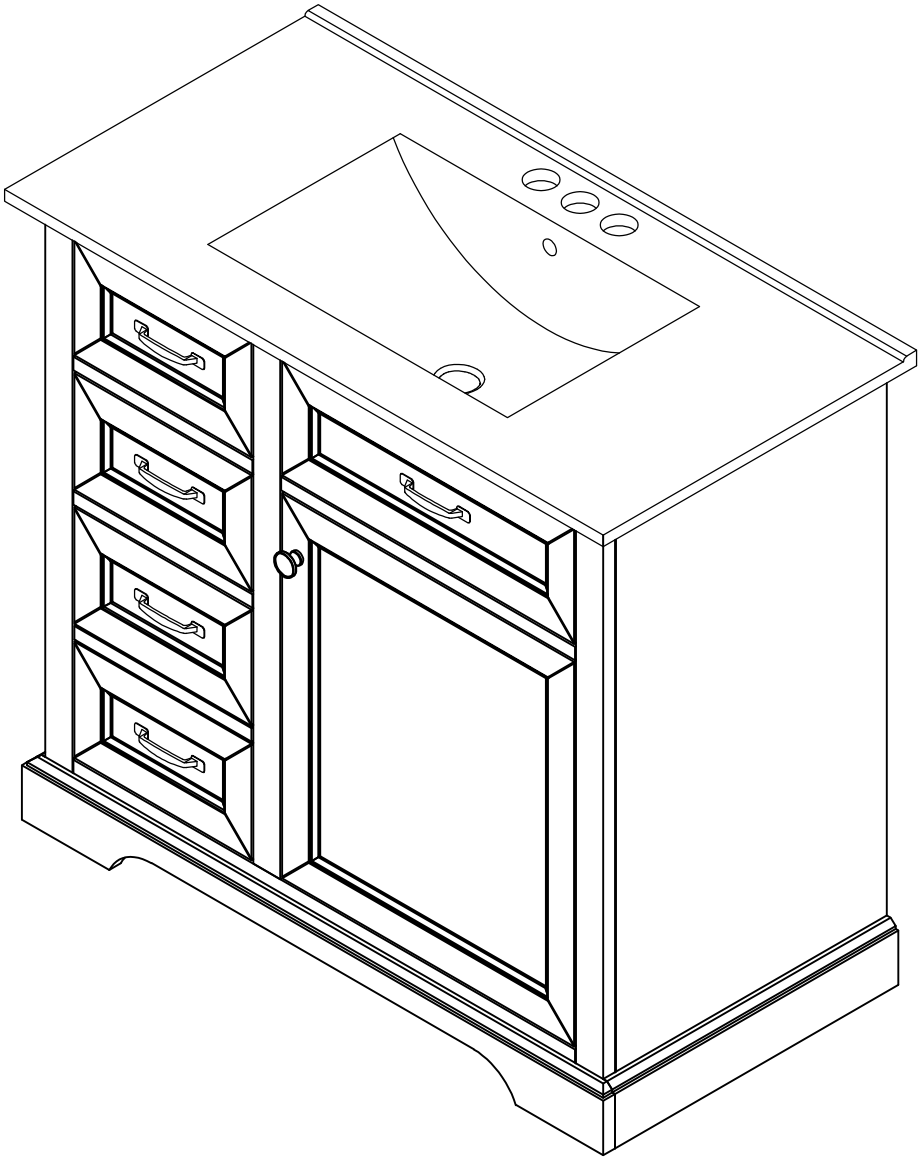

Thank you for purchasing this quality product. Be sure to check all pac material carefully for small parts which may have come loose inside the carton during shipment. Separate, identify and count all parts and hardw.
Compare with the parts list to be sure all parts are present.
"DO NOT TIGHTEN SCREWS UNTIL COMPLETELY ASSEMBLED"

***Use of power tool to assemble this product will invalidate any claim and damage this product making unsafe !!!**
***Please assemble on a clean soft sunrface to avoid damage.**

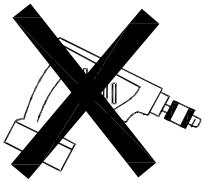

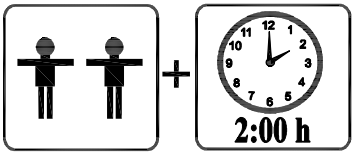


**Tools Required**

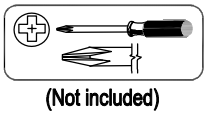
(Not included)

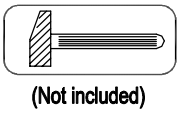
(Not included)

IMPORTANT:
PLEASE READ INSTRUCTION BEFORE STARTING THE ASSEMBLY

# Before Installation

**Important - Please read these instructions fully before starting assembly**

**Thank you for purchasing this quality product. Be sure to check all packing materials carefully for small parts, which may have come loose inside the carton during shipment. Identify and count all items according to the PARTS LIST and/or HARDWARE LIST shown below. Check you have all the components and tools listed on the following pages.**

**. We recommend that you assemble this product with the assistance of another person; this will make the assembly easier, and will help eliminate damage to the product or injury to persons during assembly.**

**. Please do not over tighten screws or bolts until the assembly is completed.**

**. Keep children and animal away from the work area, small parts could choke if swallowed.**

**. Please put all parts on a non-abrasive floor before assembly,and follow the assembly steps to assemble your newly purchased product correctly and efficently.**

**If you find that you have any trouble with assembly or missing or damaged parts please contact the seller.**

## Cam Lock Assembly Instructions

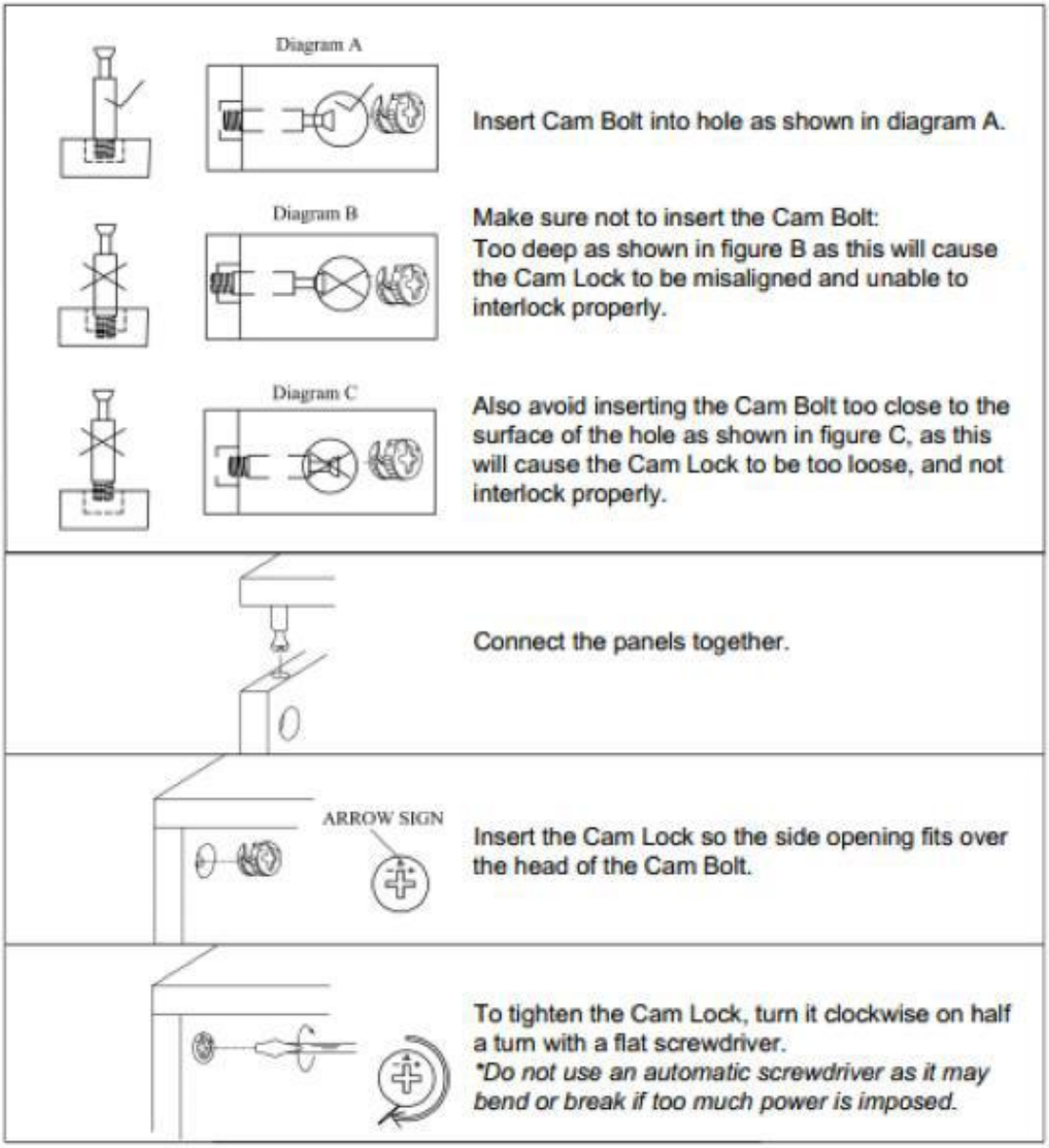

# Detail View - CABINET

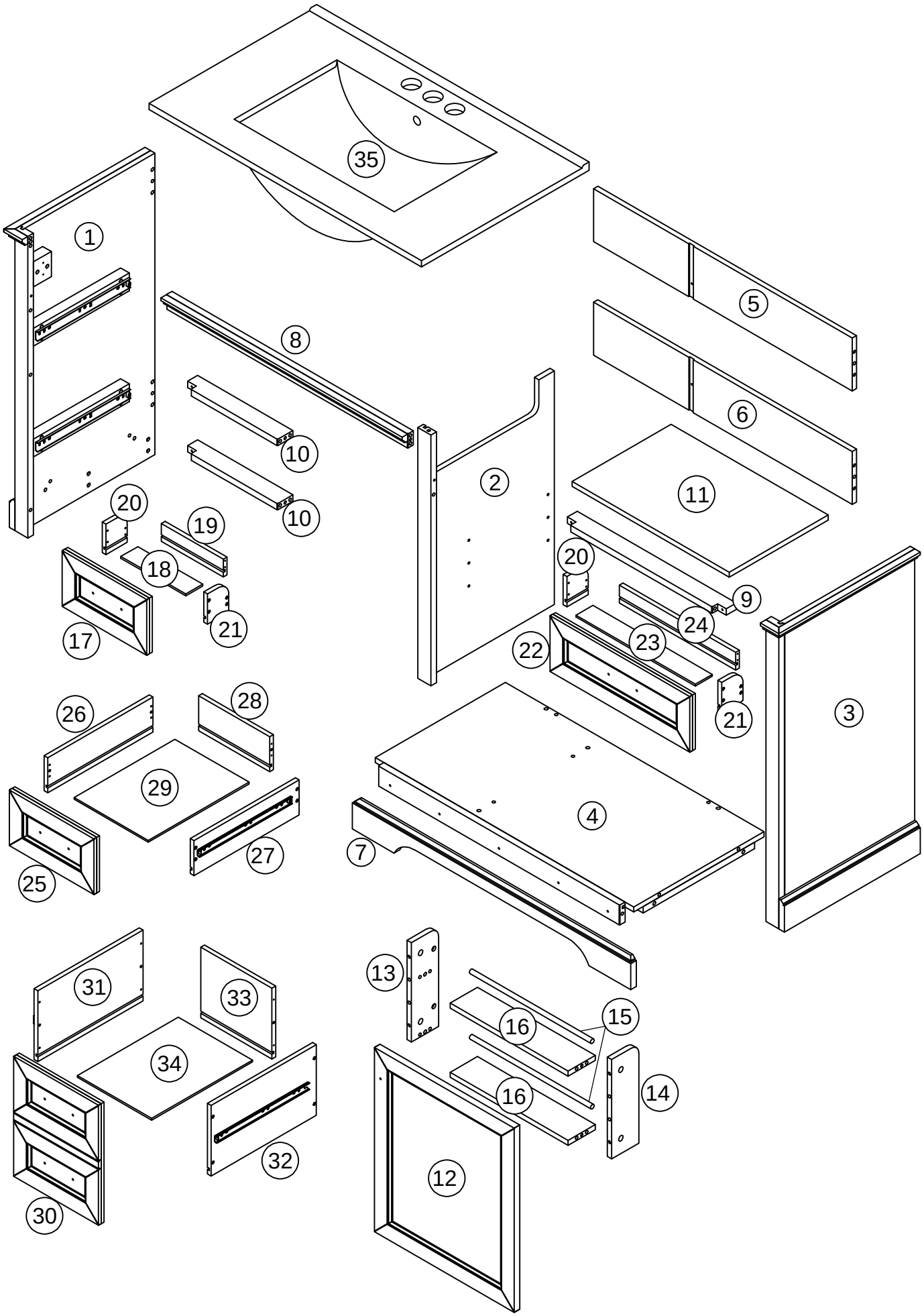


Identifying the Hardware -Indentify the hardware using the illustrations below.

# Part List-N725P532869

| | |
|---|---|
| 1 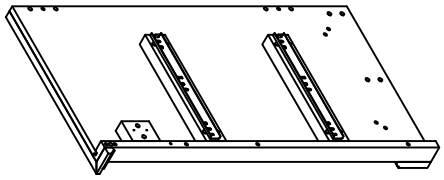 Side Panel (L) - 1pc | 2 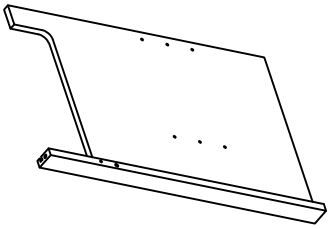 Middle Panel-1pc |
| 3 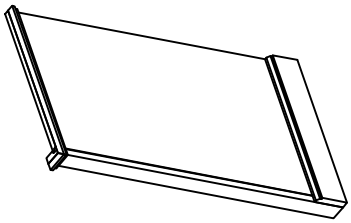 Side Panel (R)-1pc | 4 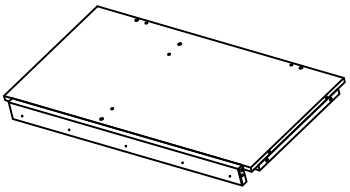 Bottom Panel-1pc |
| 5 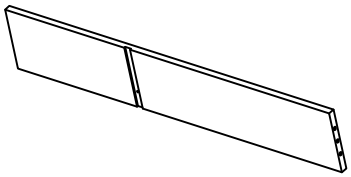 Top Panel Rear-1pc | 6 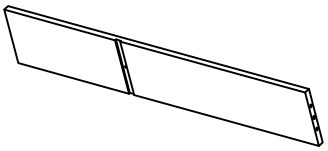 Bottom Panel Rear-1pc |
| 7  Front Rail Bottom-1pc | 8  Front Rail Top-1pc |
| 9 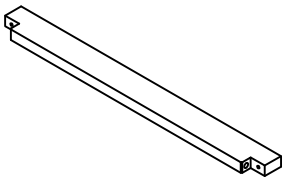 Front Rail #1 - Middle-1pc | 10 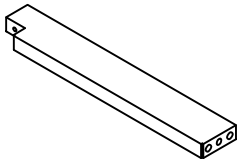 Front Rail #2 - Middle-2pcs |
| 11 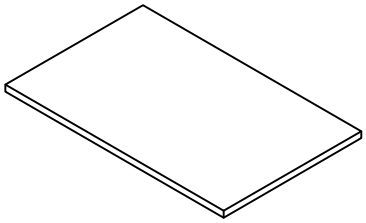 Shelf-1pc | 12 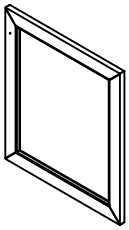 Door-1pc |
| 13 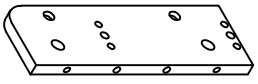 Door Side Panel (L)-1pc | 14 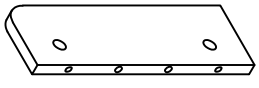 Door Side Panel (R)-1pc |

# Part List-N725P532869

| | |
|---|---|
| 15  Round Bar-2pcs | 16 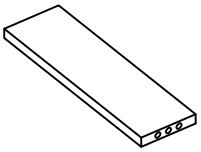 Door Shelf Panel-2pcs |
| 17 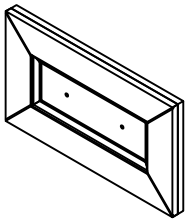 Front Flip Down Box - Left-1pc | 18 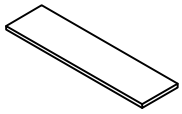 Bottom Flip down Box - Left-1pc |
| 19 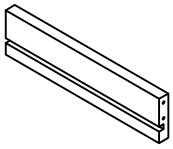 Back Flip down Box - Left-1pc | 20 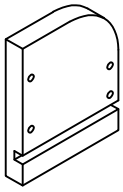 Sides Flip down Box (L)-2pcs |
| 21 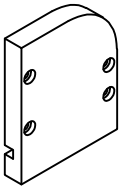 Sides Flip down Box (R)-2pcs | 22 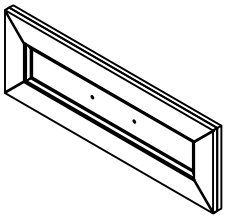 Front Flip down Box - Right-1pc |
| 23 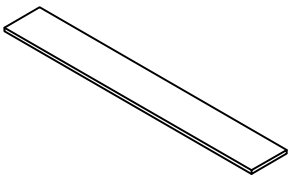 Bottom Flip down Box - Right-1pc | 24 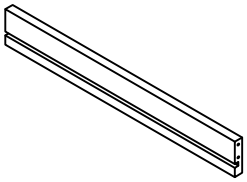 Back Flip down Box - Right-1pc |
| 25 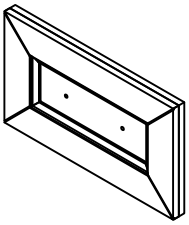 Front Drawer Panel - Top-1pc | 26 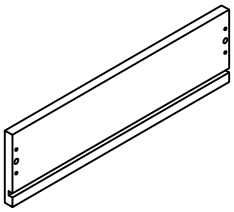 Sides Drawer Panel - Top (L)-1pc |
| 27 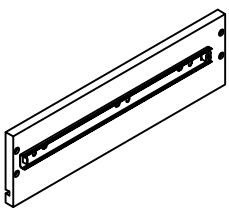 Sides Drawer Panel - Top (R)-1pc | 28 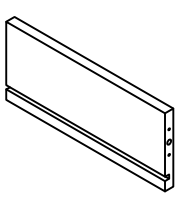 Back Drawer Panel - Top-1pc |

# Part List-N725P532869

| | |
|---|---|
| 29 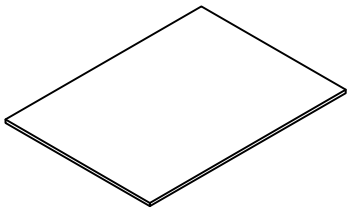 Bottom Drawer Panel - Top-1pc | 30 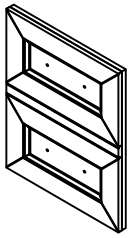 Front Drawer Panel - Bottom-1pc |
| 31 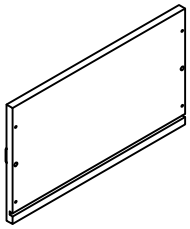 Sides Drawer Panel - Bottom (L)-1pc | 32 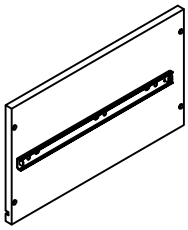 Sides Drawer Panel - Bottom (R)-1pc |
| 33 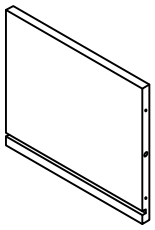 Back Drawer Panel - Bottom-1pc | 34 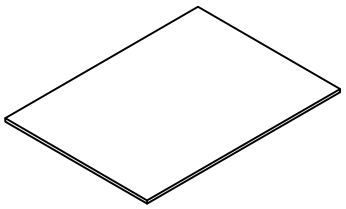 Bottom Drawer Panel - Bottom-1pc |
| 35 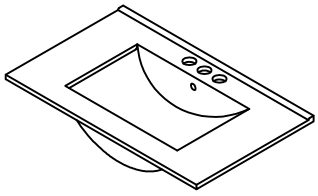 Sink-1pc | |

# Hardware List-N725P532869

| | | |
|---|---|---|
| A 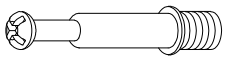 ø6x35mm | B  ø14.5x12mm | C  ø8xø4x25mm |
| Three in one bolts - 25+1pcs | Three in one lock - 25+1pcs | Round head screw - 5+1pcs |
| D  ø8xø4x32mm | E 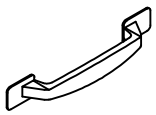 | F  |
| Round head screw - 38+1pcs | Handle - 5pcs | Handle -1pc |
| G 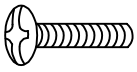 ø5/32"x25mm | H 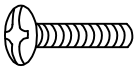 ø5/32"x28mm | I 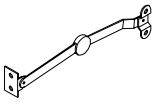 |
| Handle screw - 8pcs | Handle screw - 1pc | Duo Forte (L) - 1pc |
| J 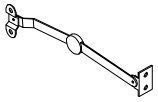 | K 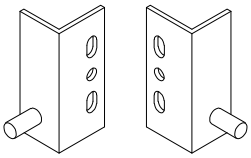 | L  ø6xø3x12mm |
| Duo Forte (R) - 1pc | Rotary Hinge(L/R) - 4pcs | Round head screw - 16+1pcs |
| M 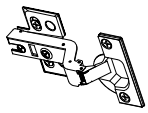 | N  ø7xø3.5x12mm | O  |
| Damping hinge - 2pcs | Flat head screw - 12+1pcs | Laminate pad - 4pcs |
| P 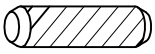 ø6x30mm | Q 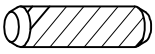 ø8x30mm | R  ø13x1/4"x30mm |
| Wood dowel - 8+1pcs | Wood dowel - 38+1pcs | Hex-Head bolts - 4+1pcs |
| S  ø1/4"x16x1mm | T 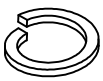 ø1/4"x10x1.2mm | U  4mm |
| Washer - 4+1pcs | Lock Washer - 4+1pcs | Allen key - 1pc |
| V 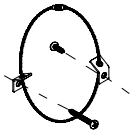 | W 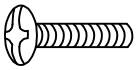 ø5/32"x15mm | |
| Anti fall hardware (2sets) | Handle screw - 2pcs | |

## STEP: 1

A



10PCS

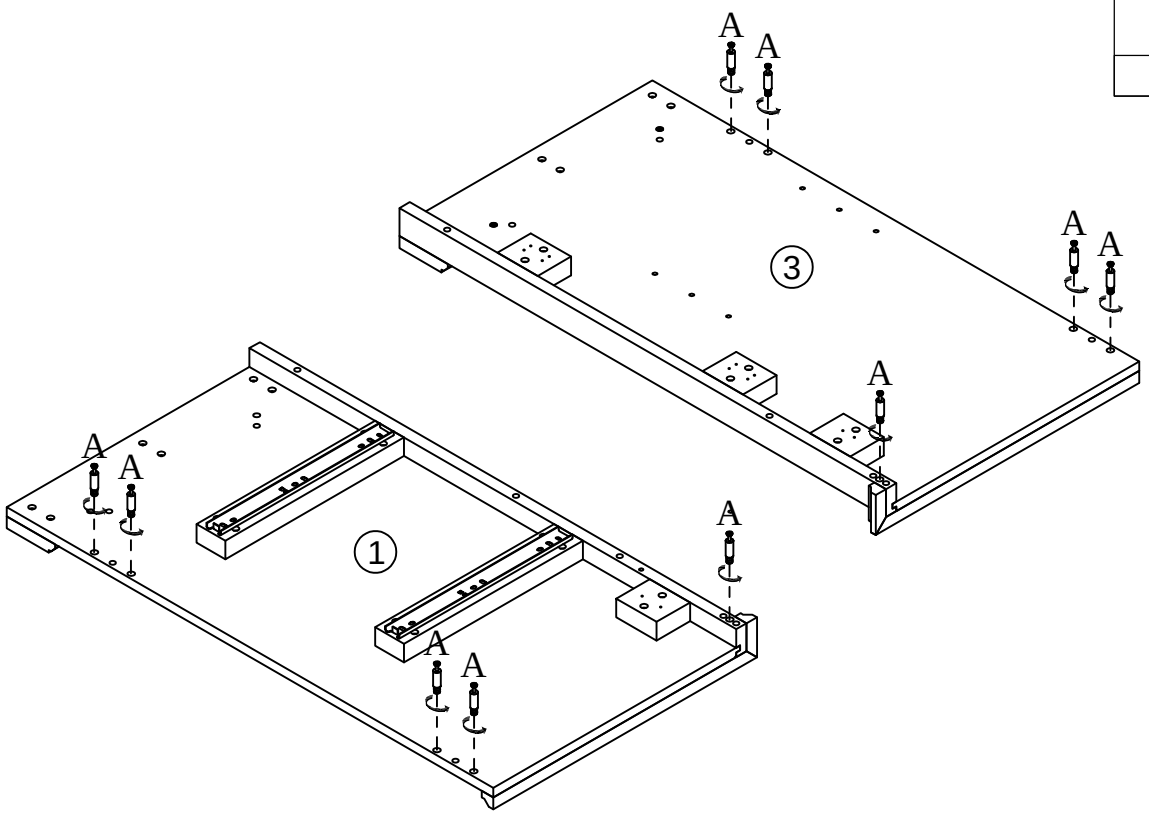


## STEP: 2

A

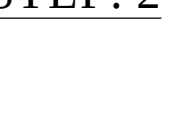

7PCS

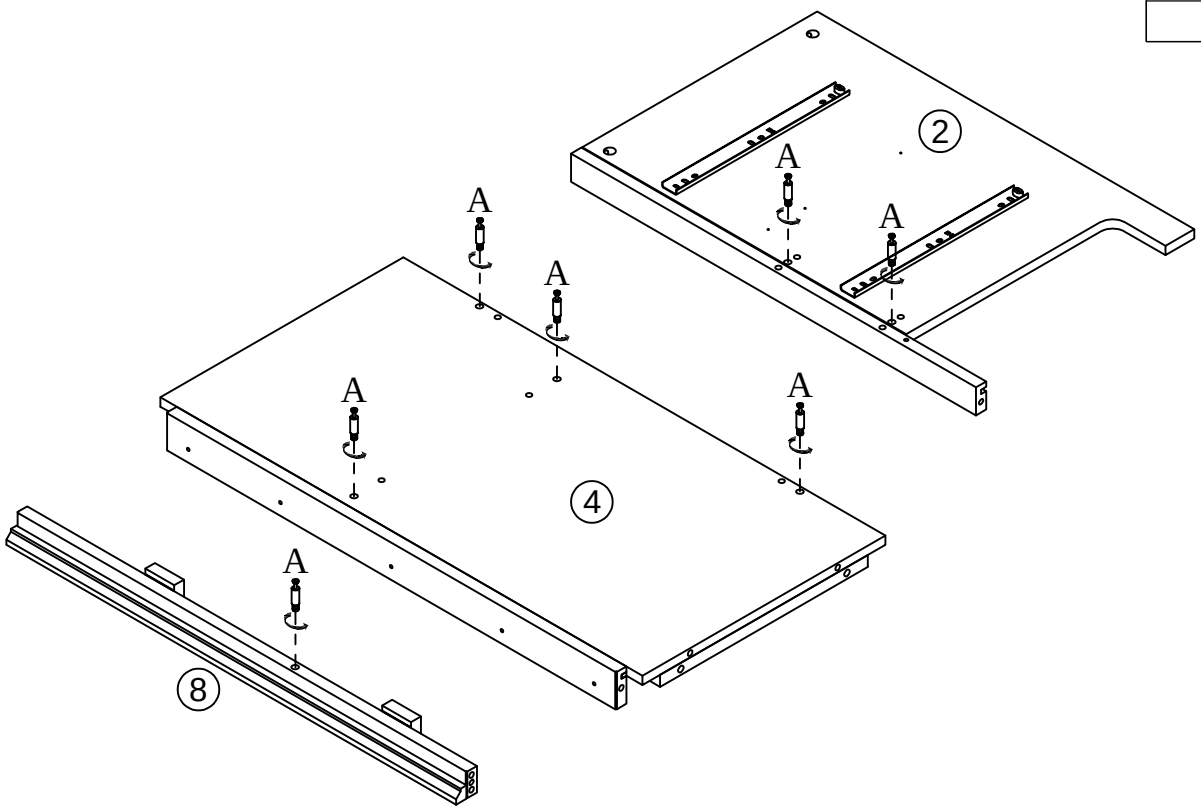

## STEP: 3

| D |
| --- |
|  |
| 2PCS |

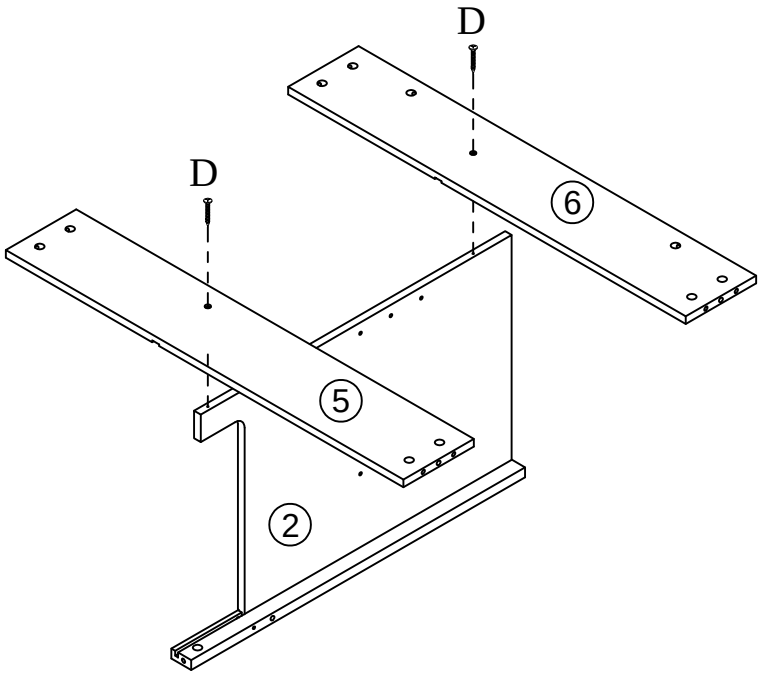


## STEP: 4

| Q | B |
| --- | --- |
| 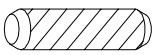 |  |
| 4PCS | 4PCS |

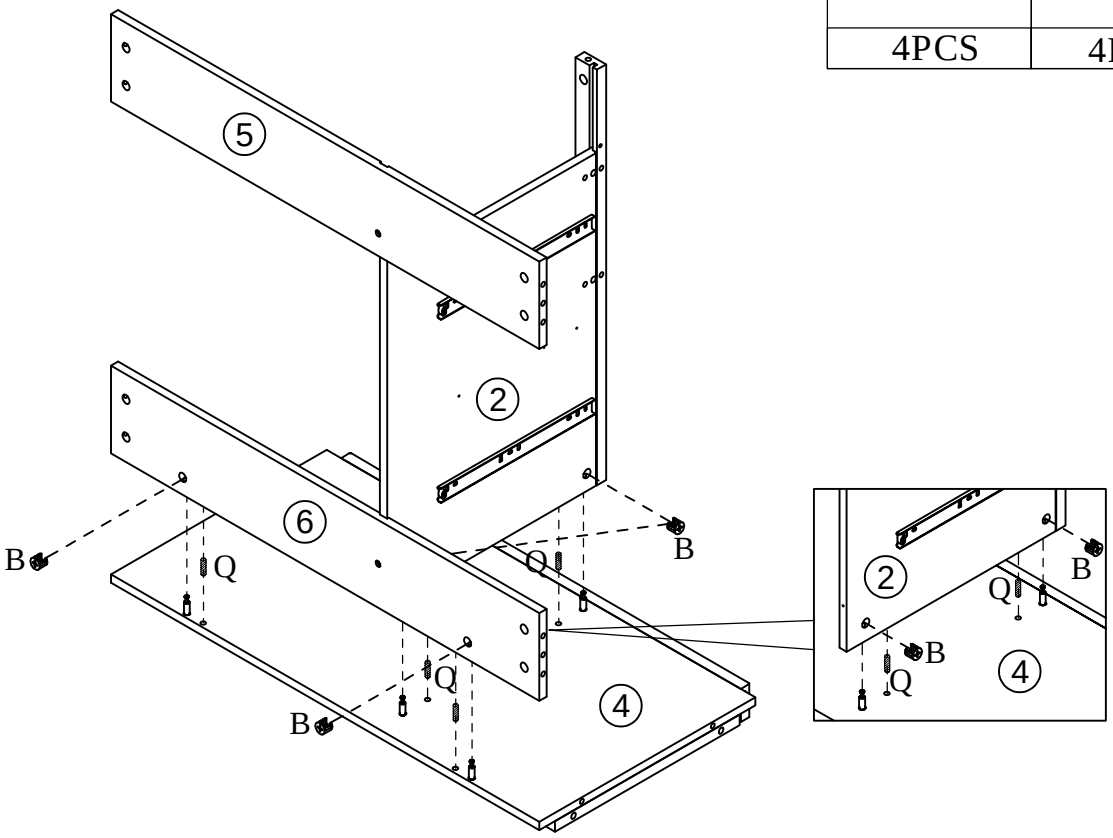

## STEP: 5

| Q | B |
|---|---|
| 4PCS | 3PCS |

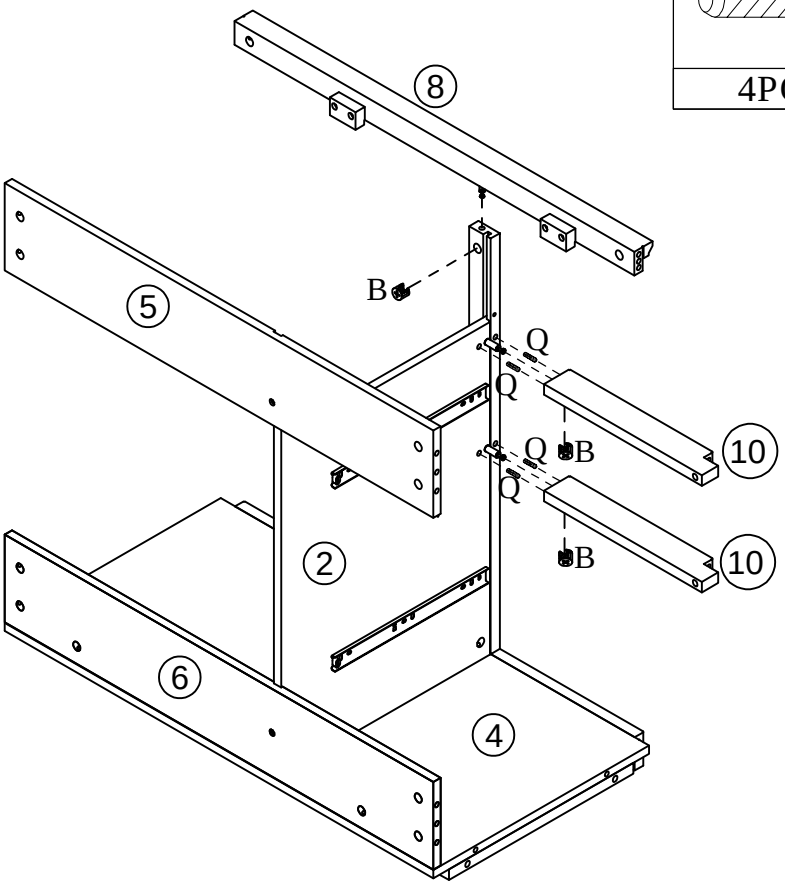


## STEP: 6

| D | L | K | E | G |
|---|---|---|---|---|
| 8PCS | 4PCS | 2PCS | 1PC | 2PCS |

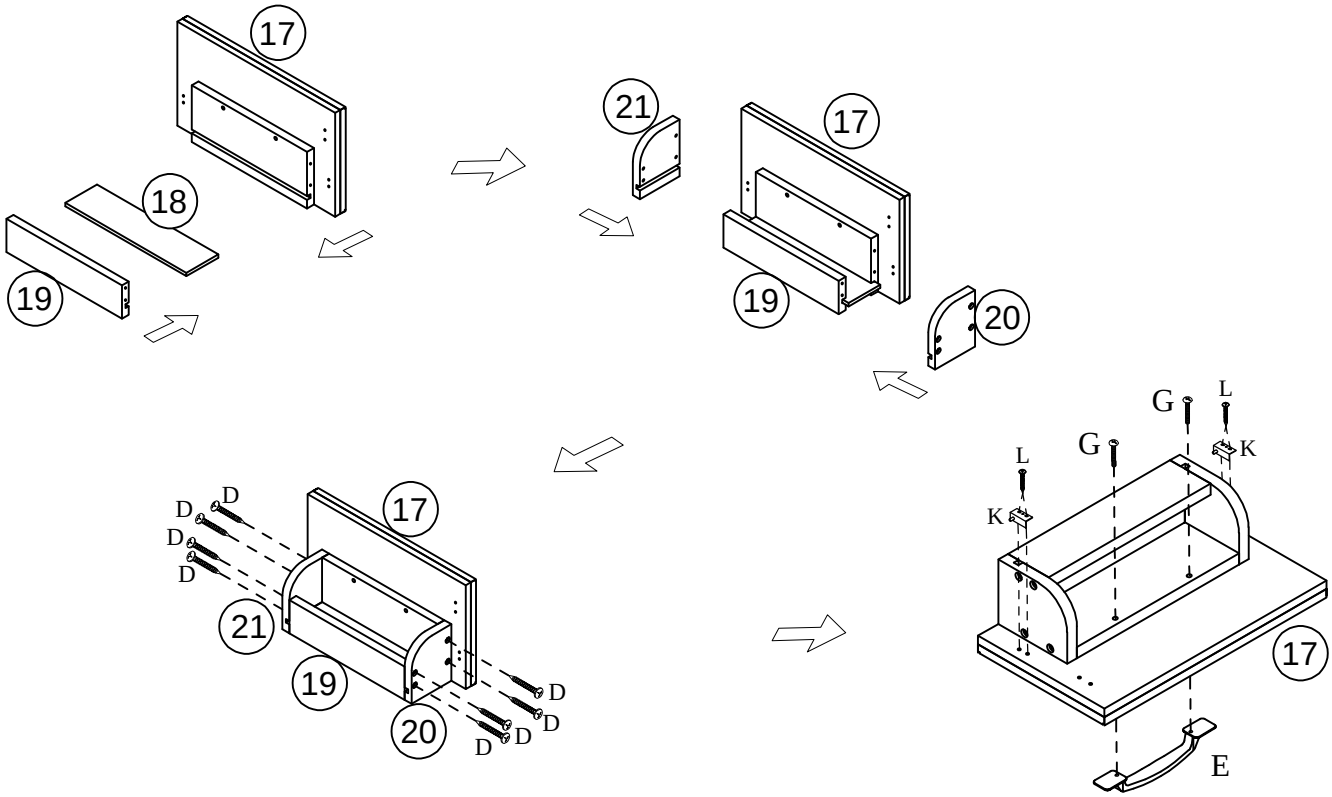

# STEP: 7

| D | L | K | E | G |
|---|---|---|---|---|
| 8PCS | 4PCS | 2PCS | 1PC | 2PCS |

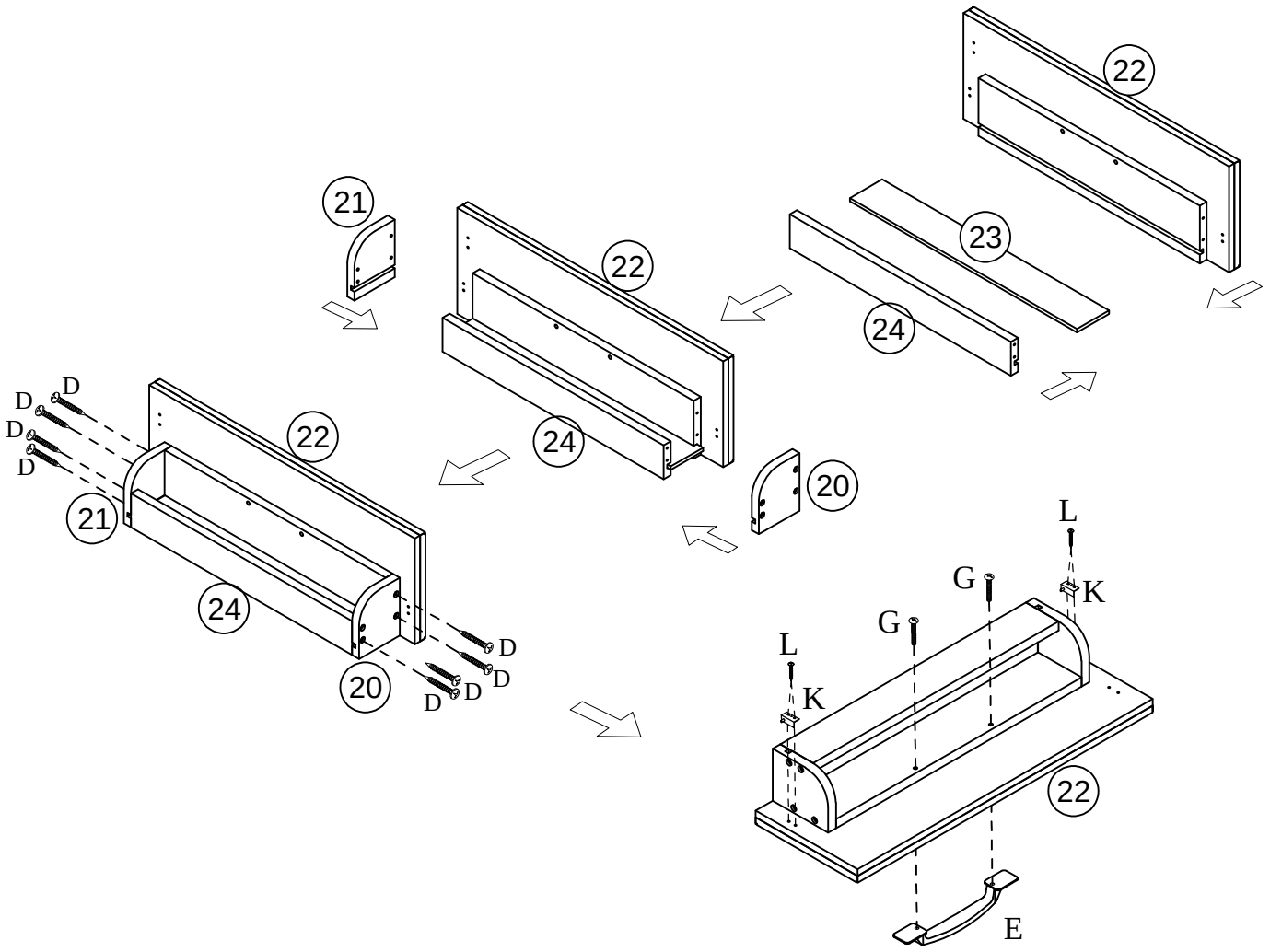

# STEP: 8

| S | T | R | Q | B | U |
|---|---|---|---|---|---|
| 2PCS | 2PCS | 2PCS | 9PCS | 5PCS | 1PC |

| D |
|---|
| 2PCS |

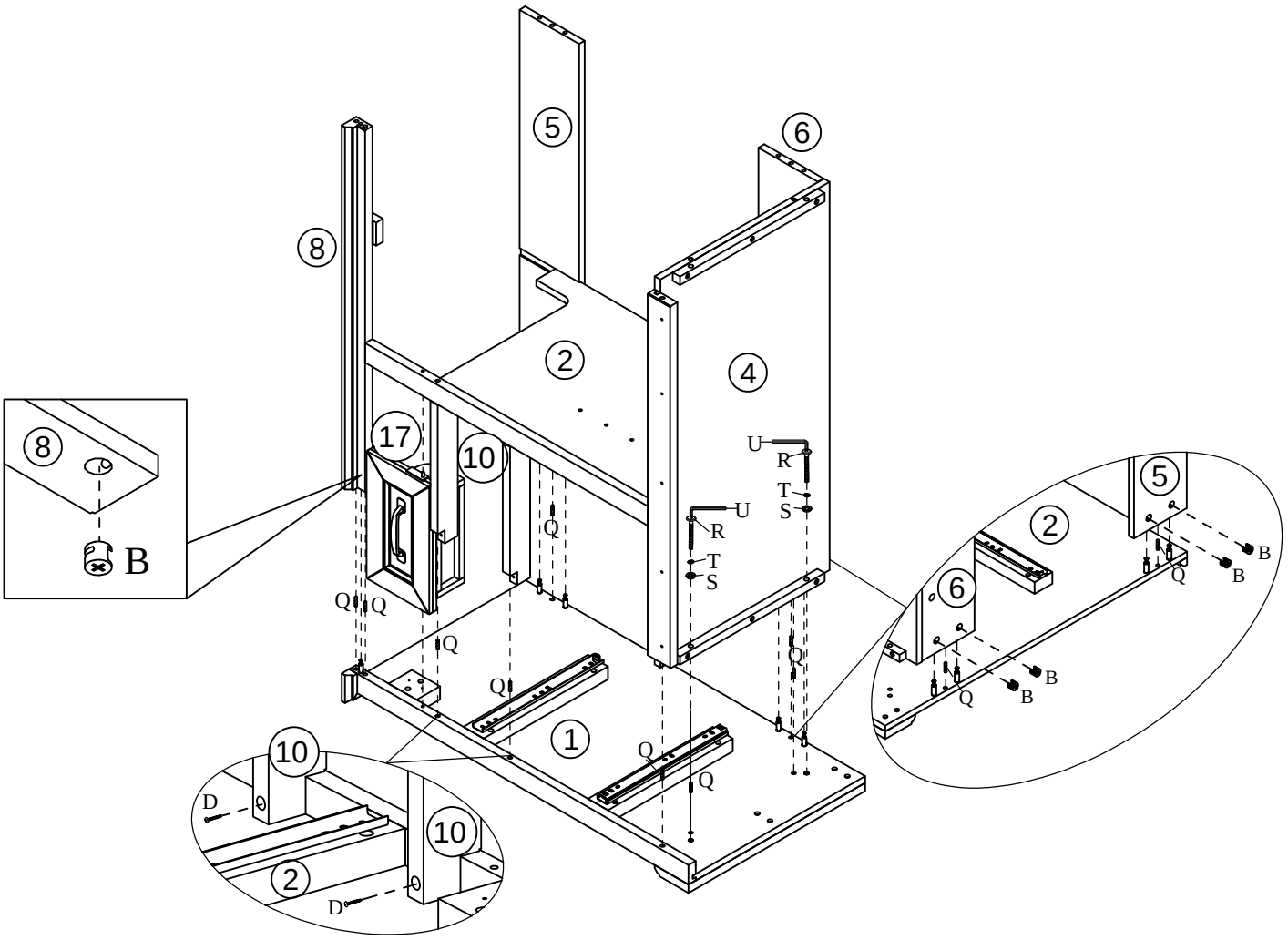

# STEP: 9

| S | T | R | Q | B | U |
|---|---|---|---|---|---|
| 2PCS | 2PCS | 2PCS | 9PCS | 5PCS | 1PC |

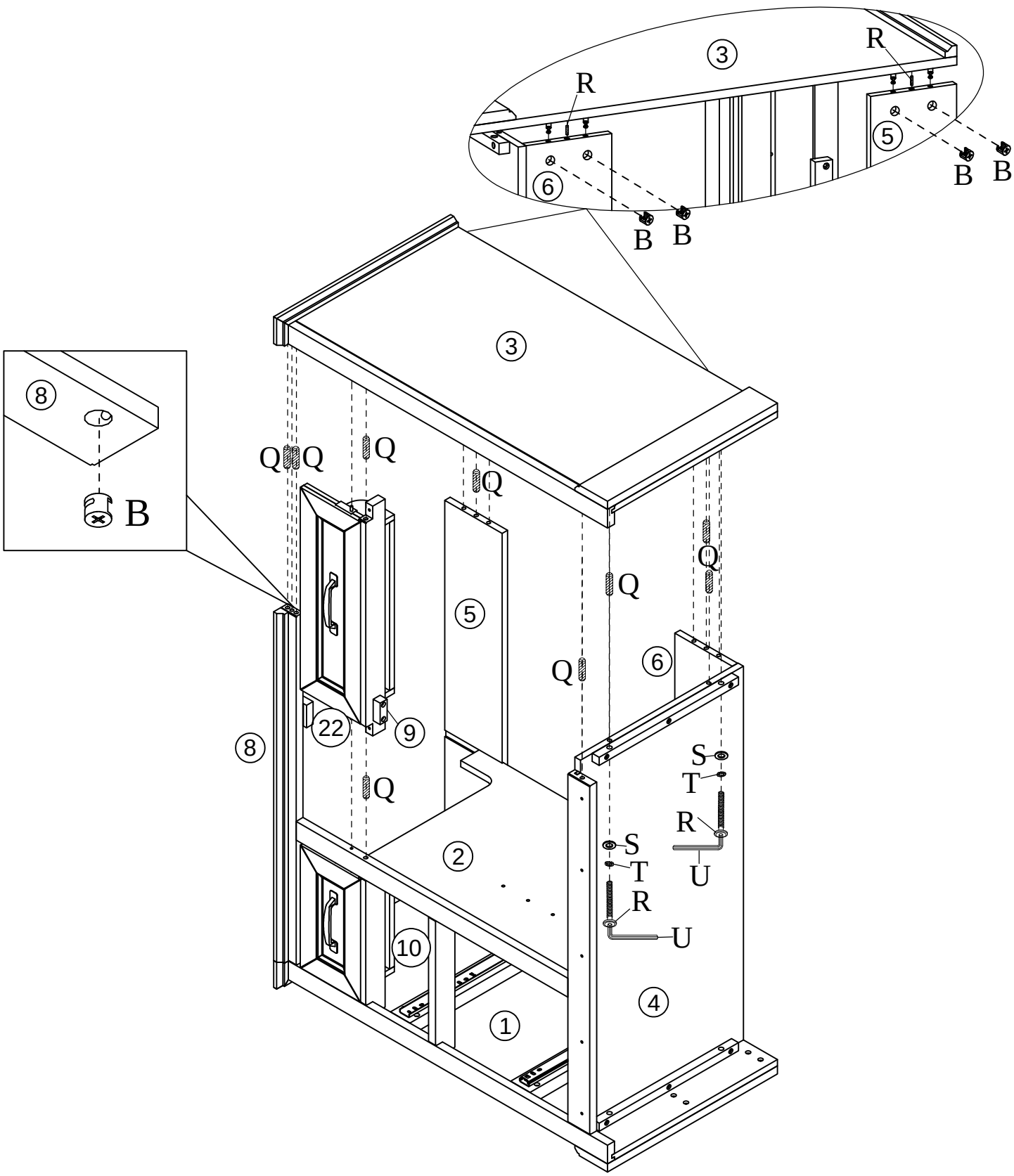

## STEP: 10

D



2PCS

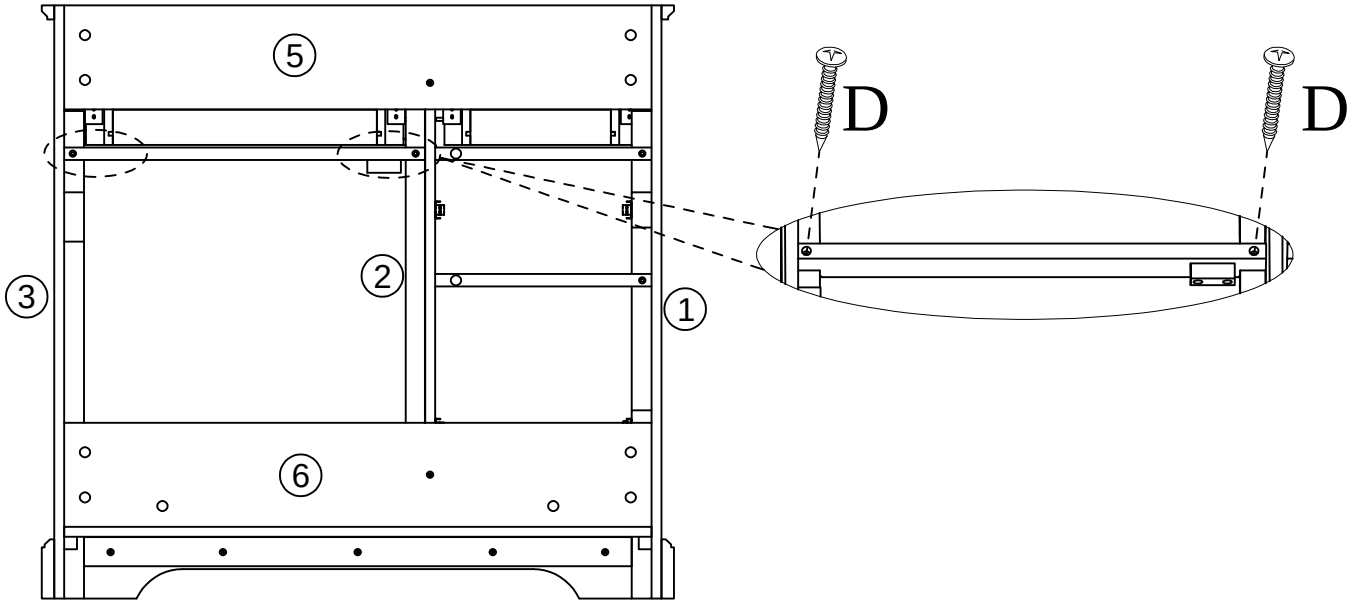


## STEP: 11

C



5PCS

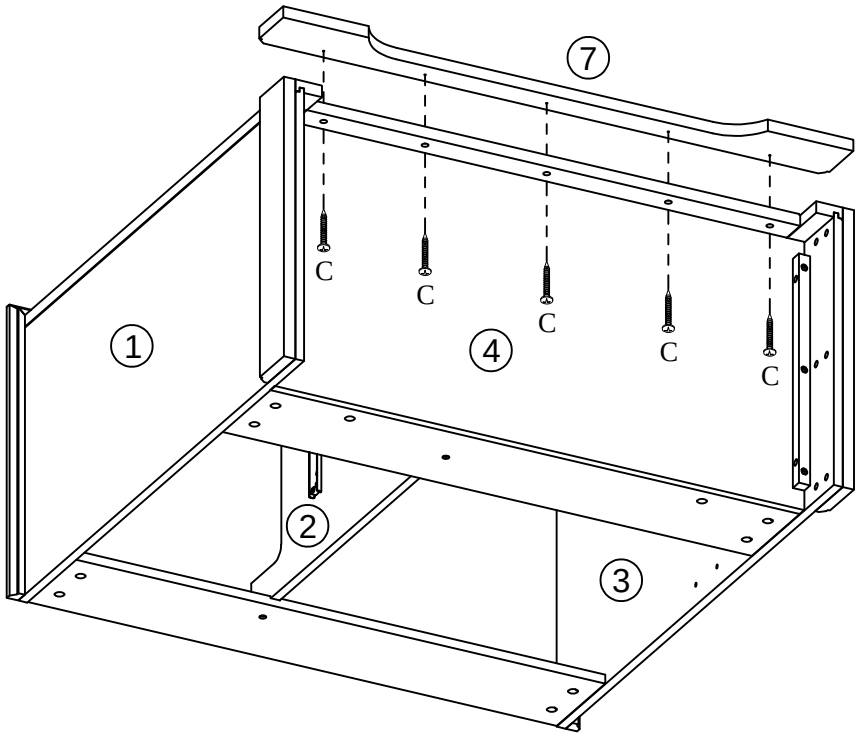

# STEP: 12

| L | J | I |
|---|---|---|
| 8PCS | 1PC | 1PC |

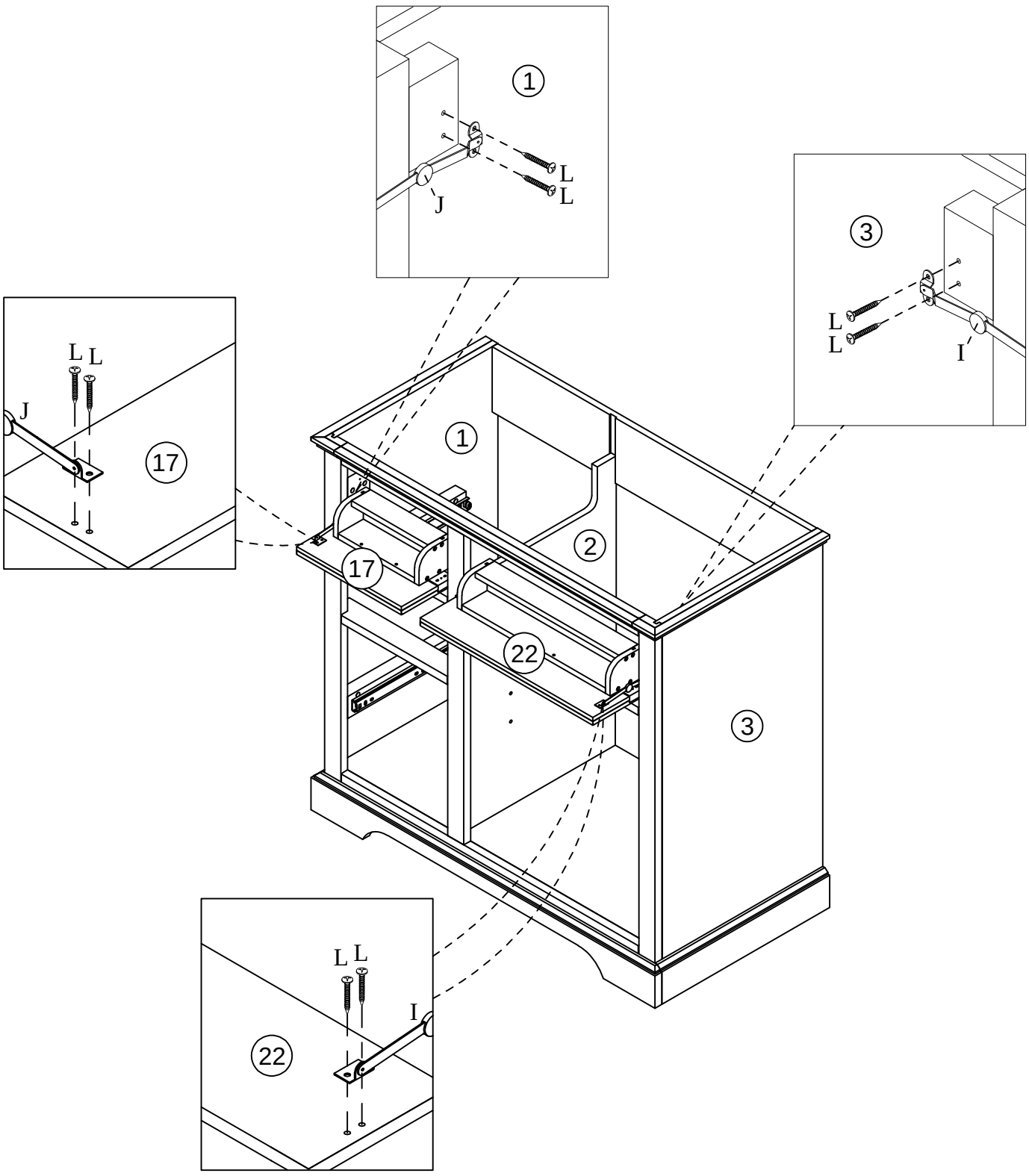

# STEP: 13

| A |
| --- |
| 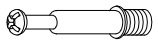 |
| 8PCS |

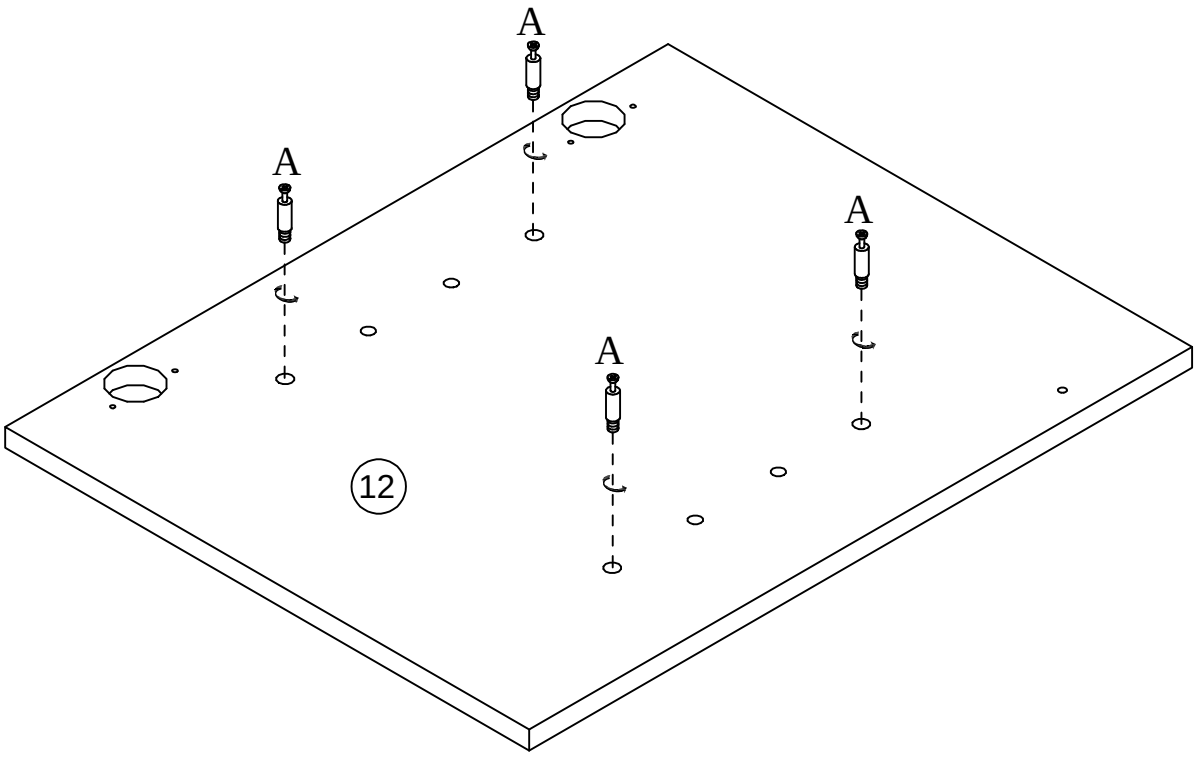


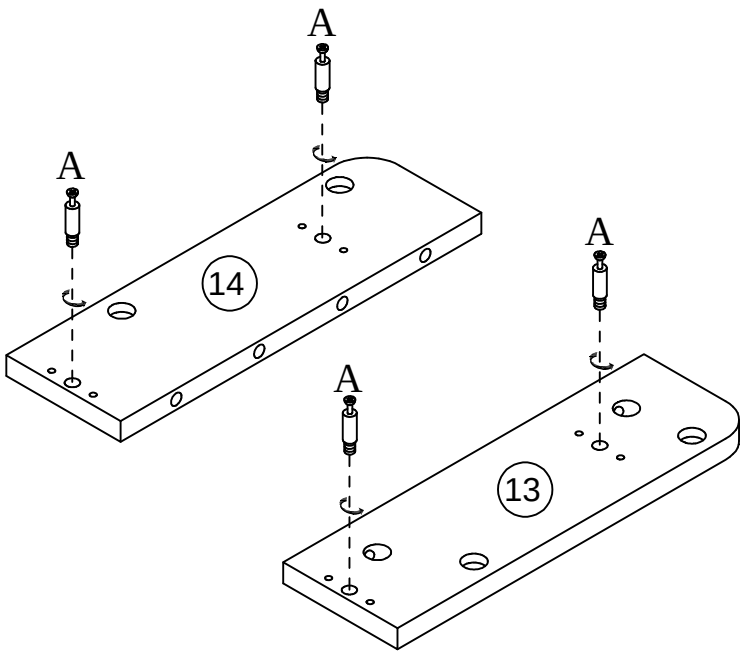

# STEP: 14

| N | M | Q | B |
|---|---|---|---|
| 4PCS | 2PCS | 12PCS | 8PCS |

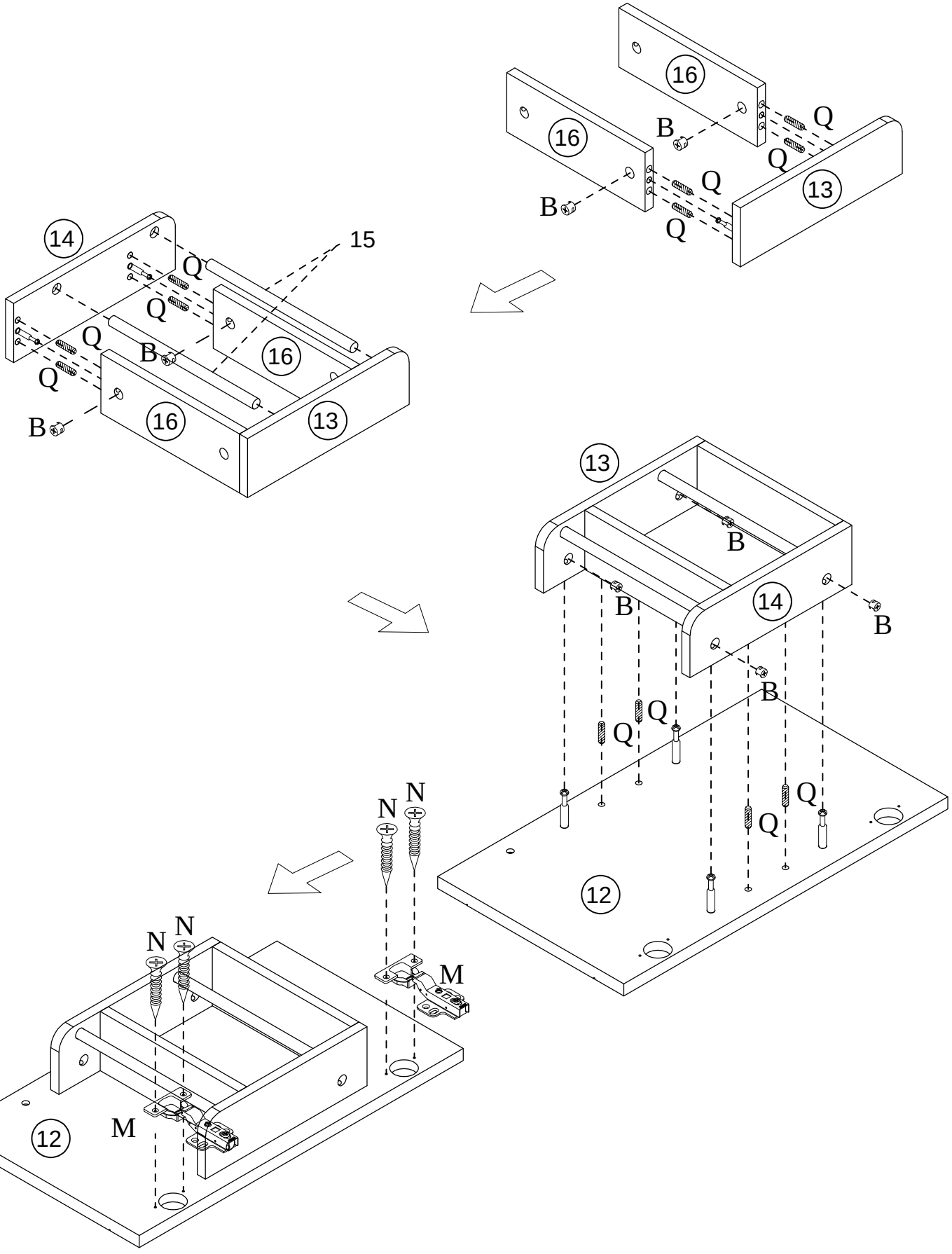

# STEP: 15

| N | F | H |
|---|---|---|
| 8PCS | 1PC | 1PC |

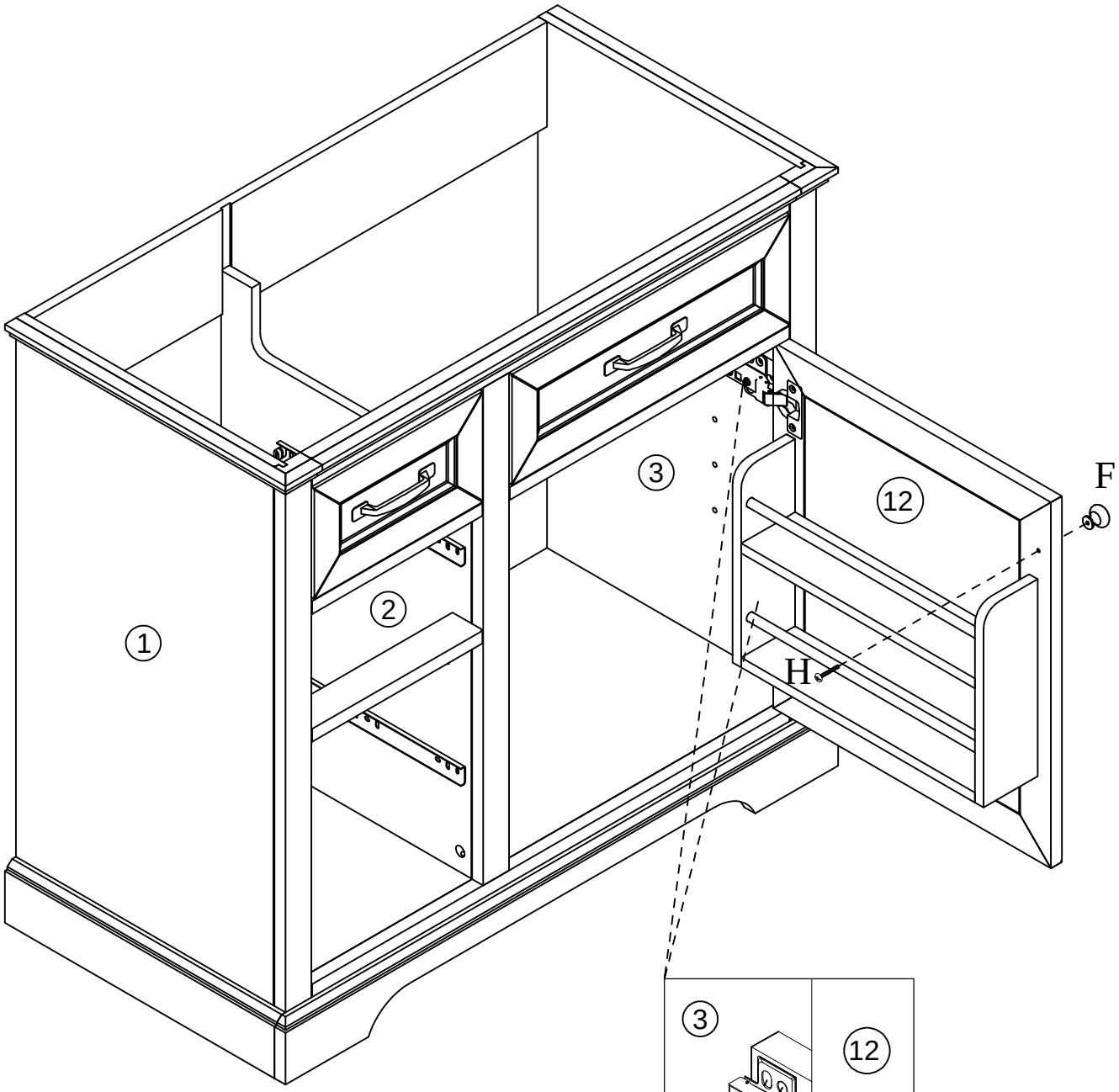


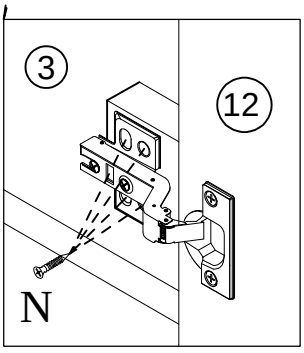


X2

Use the screws to permanent

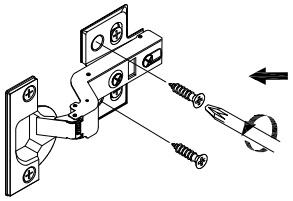

Use the screws to adjust up or down

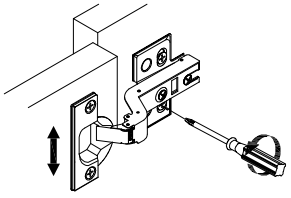

Use the screws to adjust in or out

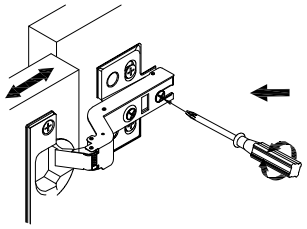

Use the screws to adjust left or right

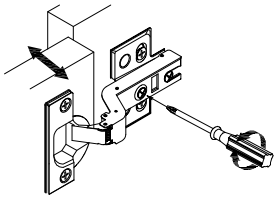

## STEP: 16

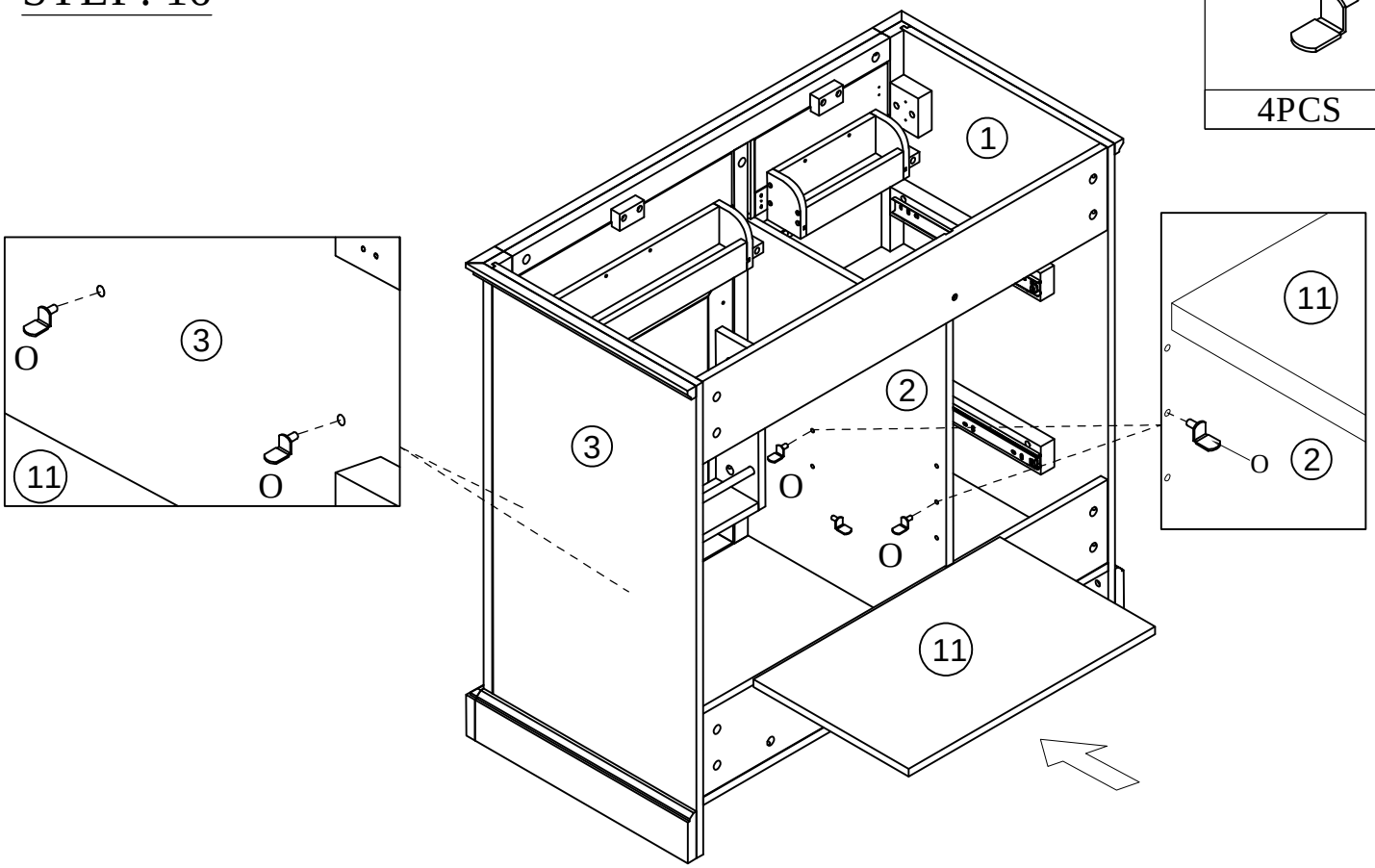


## STEP: 17

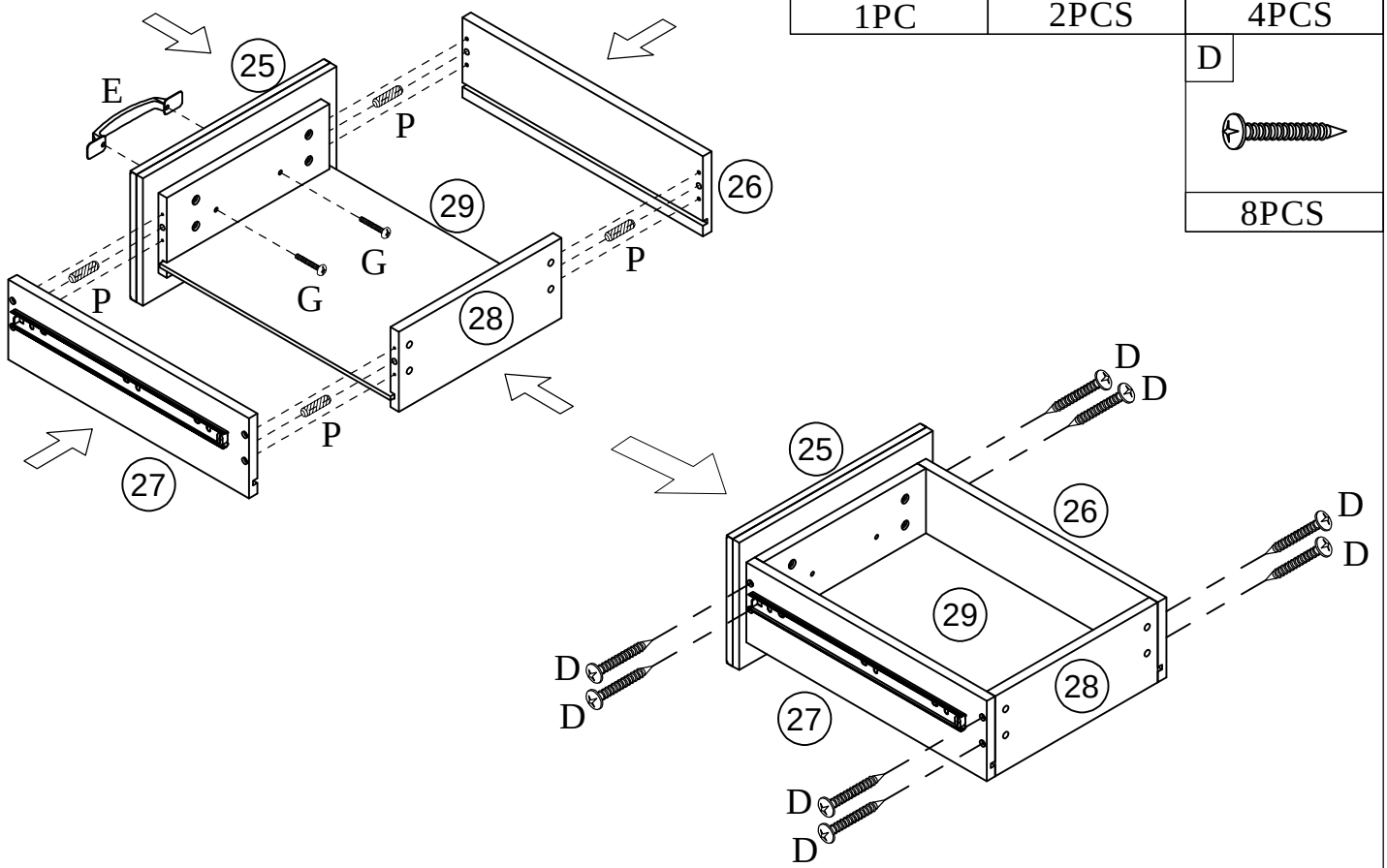

## STEP: 18

| P | E | W | G |
|---|---|---|---|
| 4PCS | 2PCS | 2PCS | 2PCS |

| D |
|---|
| 8PCS |

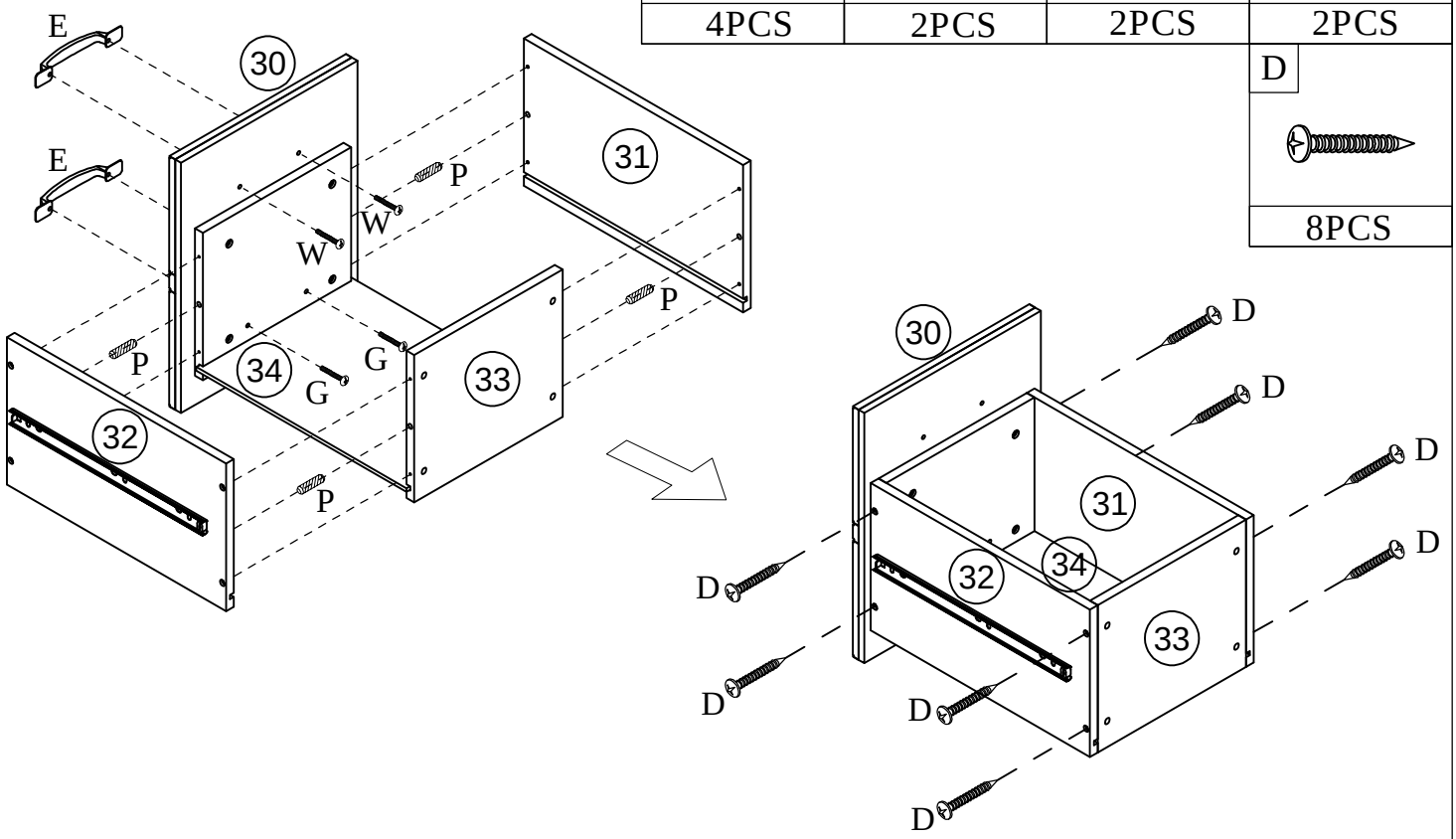


## STEP: 19

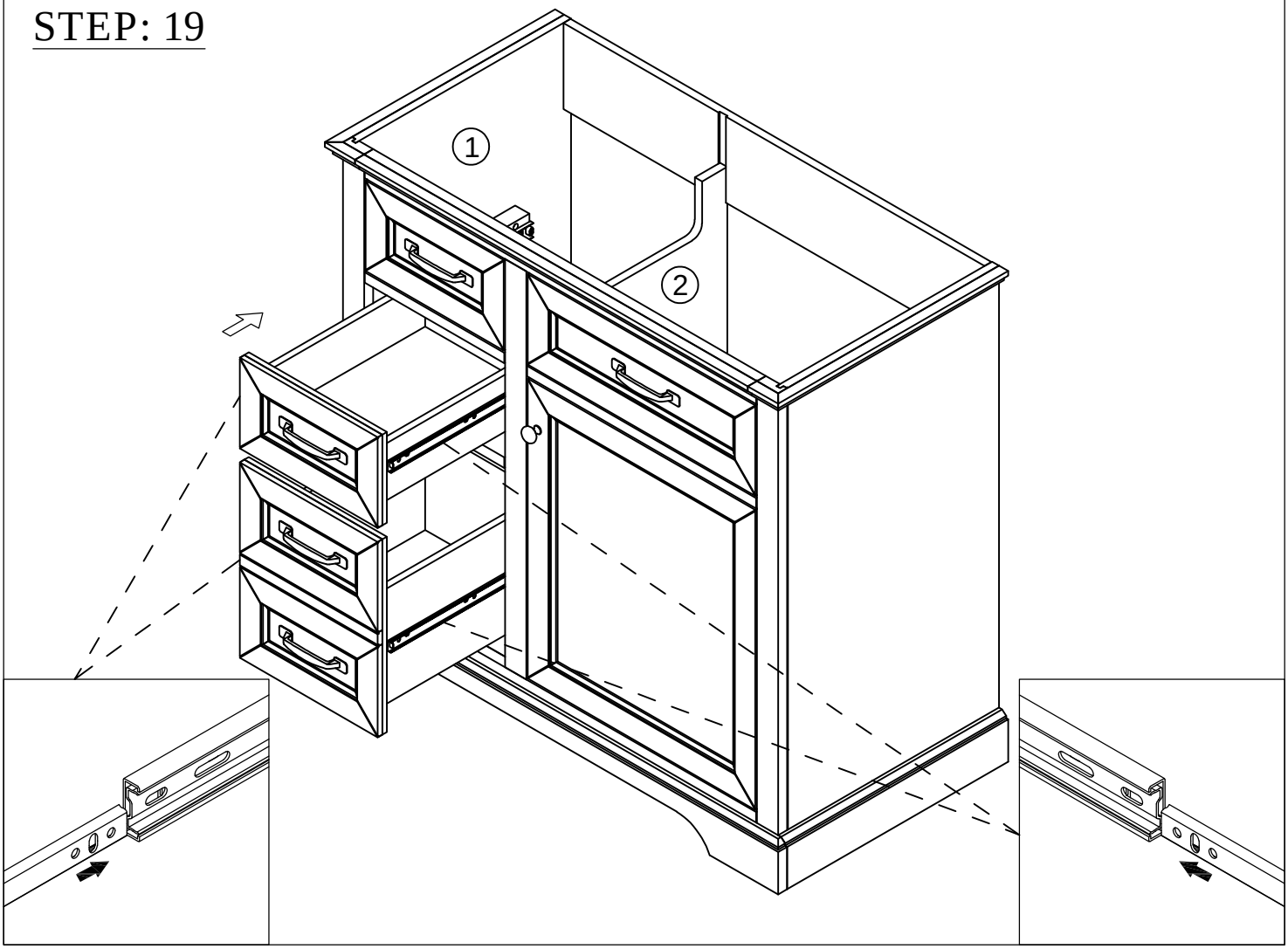

## STEP: 20

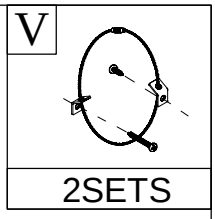


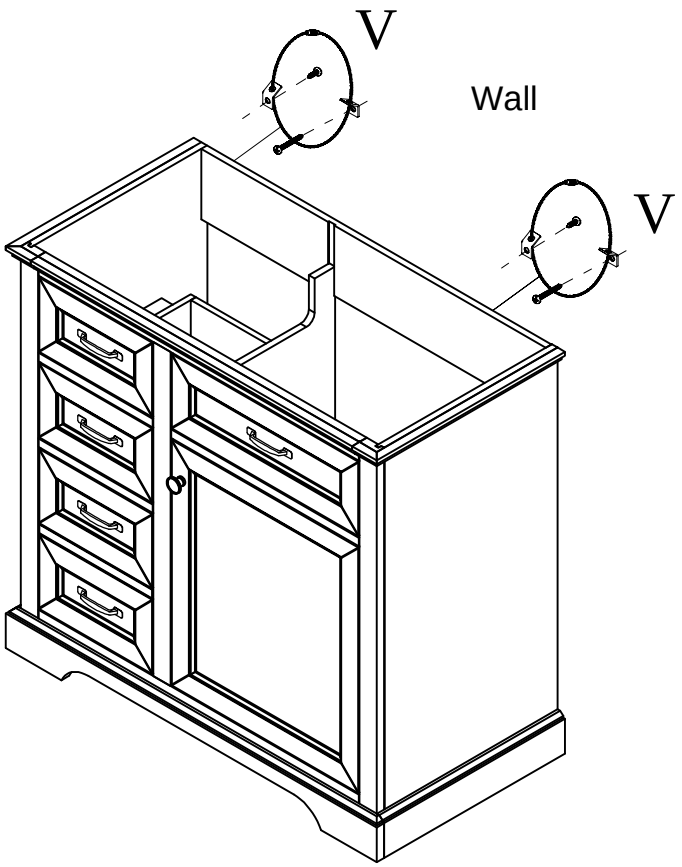


## STEP: 21

Install the sink on the cabinet with glue.
Let stand for 24 hours

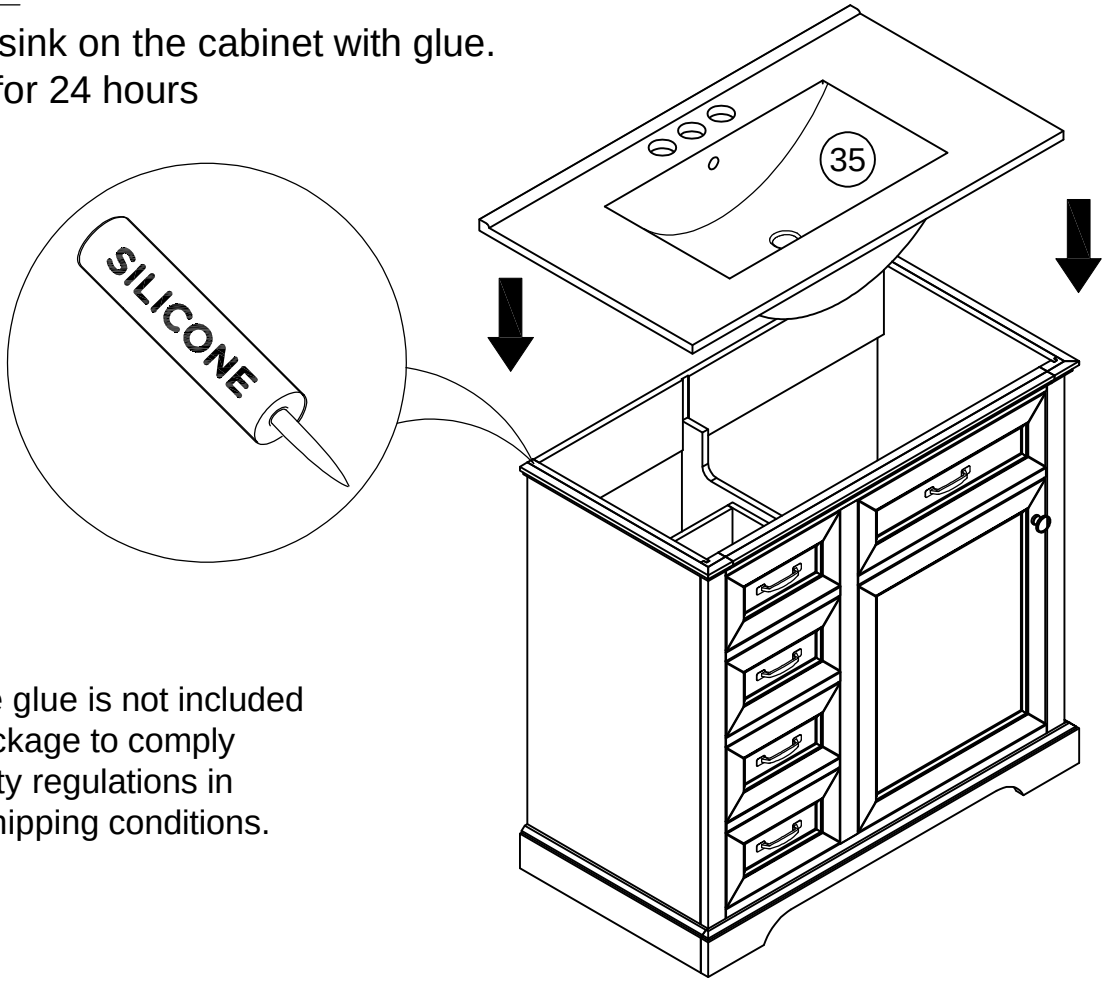


*Silicone glue is not included in the package to comply with safety regulations in certain shipping conditions.

# STEP: 22

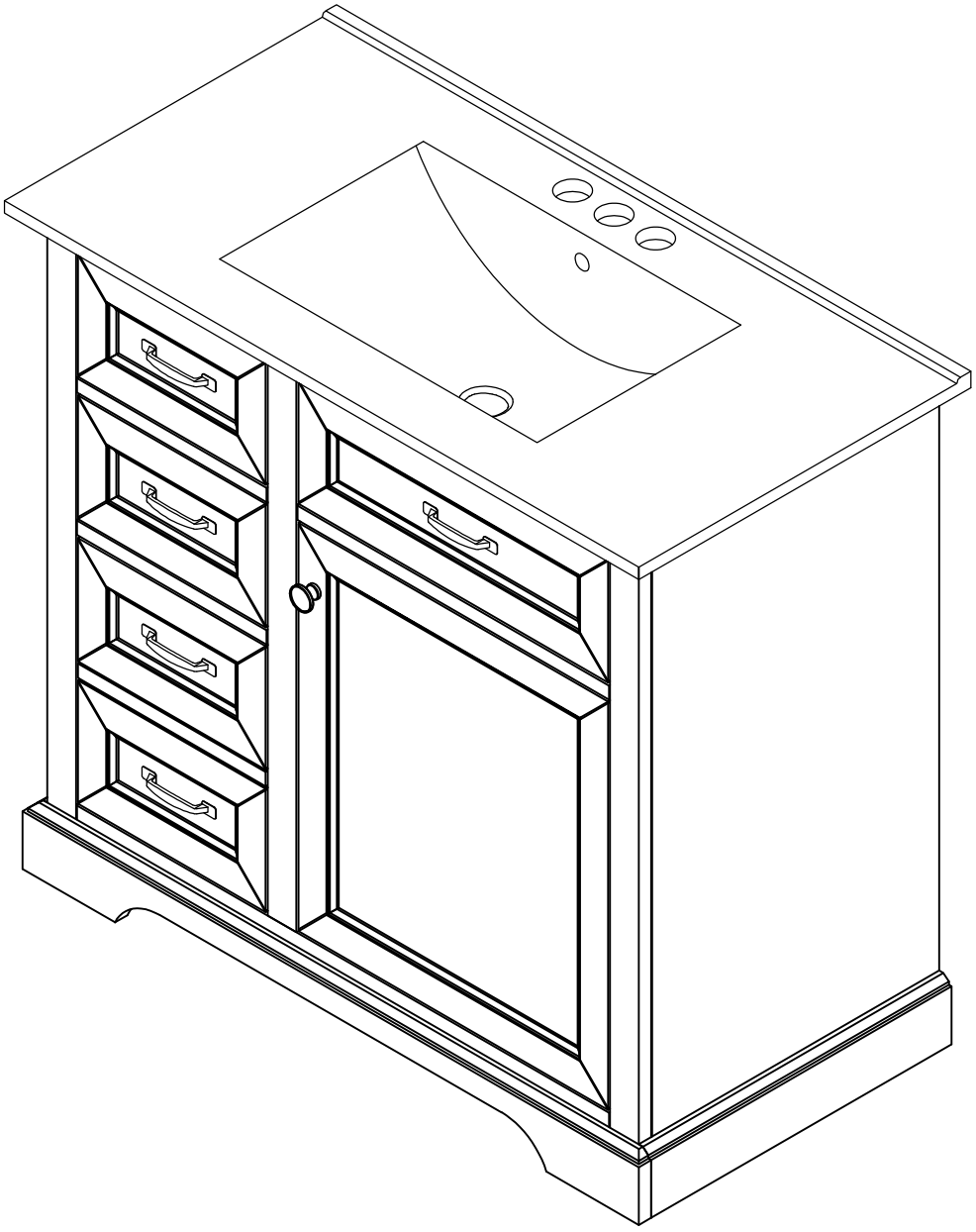



# HINGE ADJUSTMENTS

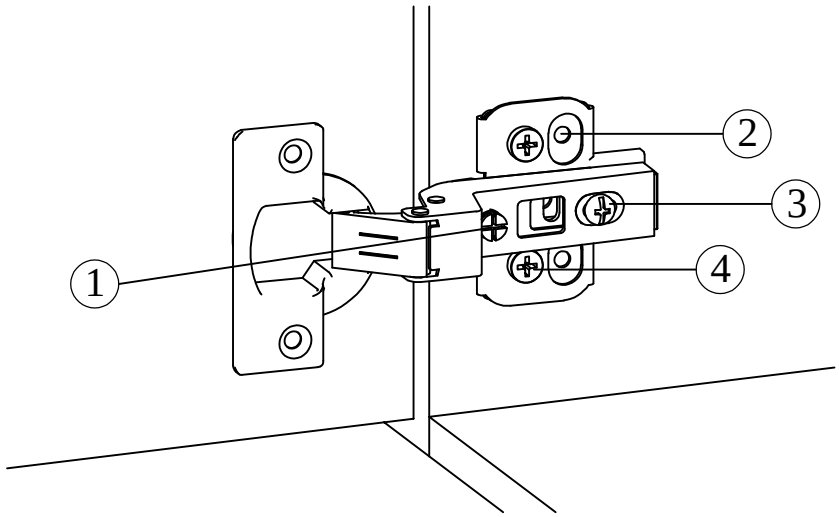


## 1 Sideways / Tilt adjustment

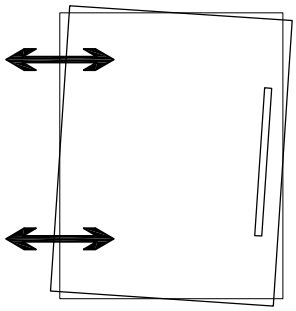

Turn the screw
clockwise to move the door further away from the side of the cabinet
anticlockwise to move the door closer to the side of the cabinet

## 2 4 Height adjustment

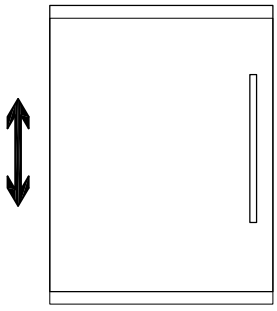

While supporting the weight of the door, turn the screws
clockwise to move the door up
anticlockwise to move the door down

## 3 Forward and back adjustment

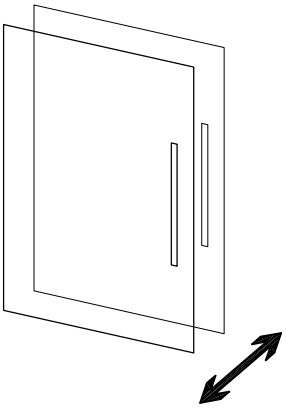

If the gap between the back of the door and the cabinet is too small, and the door may not close fully. Turn the screw
clockwise to decrease the gap between the door and the cabinet
anticlockwise to increase the gap between the door and the cabinet