ASSEMBLY INSTRUCTION

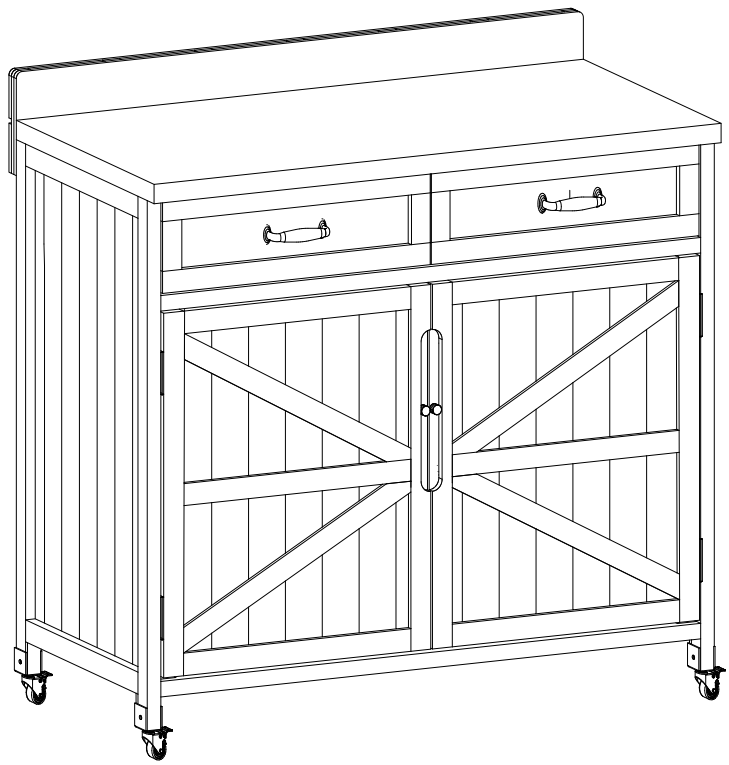

IMPORTANT NOTE:

① PLACE ALL PARTS ON A CLEAN AND SMOOTH SURFACE SUCH AS A RUG OR CARPET TO AVOID THE PARTS FROM BEING SCRATCHED.

② BEFORE YOU BEGIN,KINDLY FOLLOW THE ASSEBLY INSTRUCTIONS STEP BY STEP.

③ DO NOT TIGHTEN ALL SCREWS AND BOLTS UNTIL THIS ITEM IS FULLY SET-UP.

Detail View

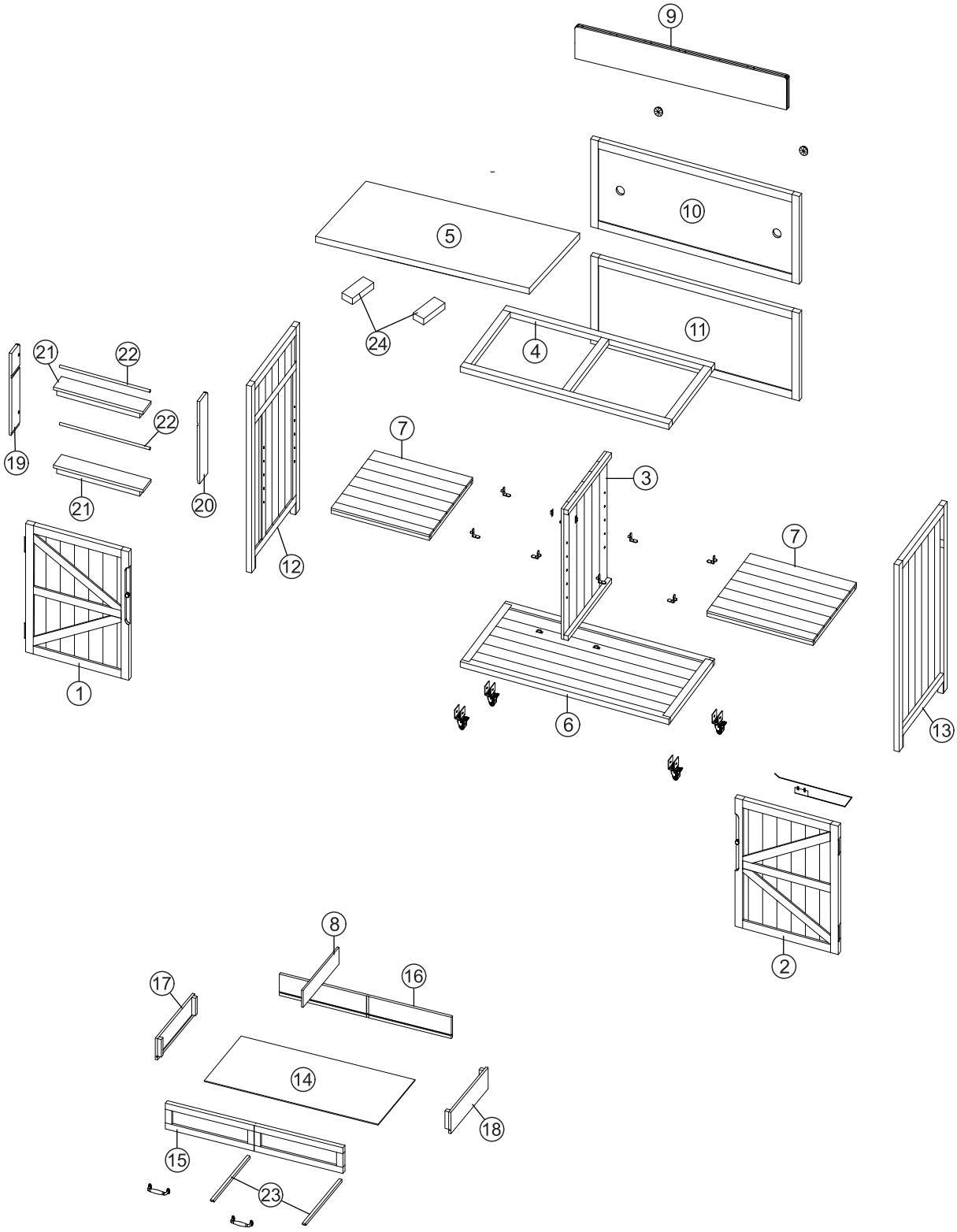

1 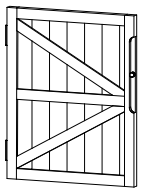 1x	2 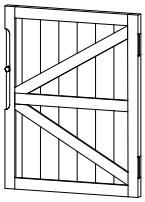 1x	3 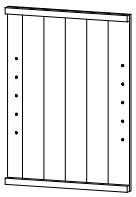 1x	4 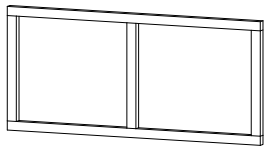 1x
5 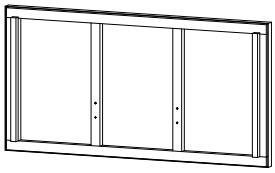 1x	6 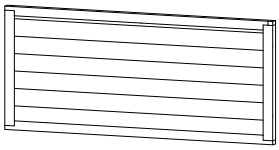 1x	7 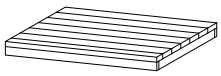 1x	8  1x
9  1x	10 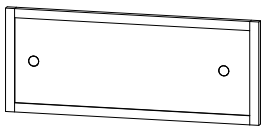 1x	11 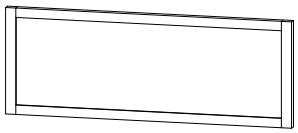 1x	12 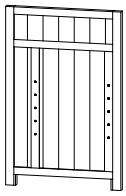 1x
13 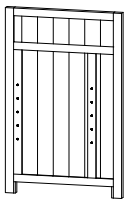 1x	14 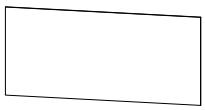 1x	15 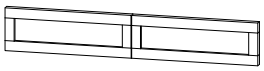 1x	16 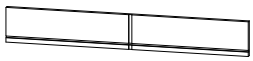 1x
17  1x	18  1x	19  1x	20  1x
21  2x	22  2x	23 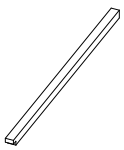 2x	24  2x
25 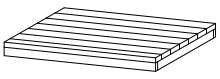 1x			

Hardware List

A ∅3.5*45 19x	B ∅3.5*40 4x	C ∅3.5*30 8x	D ∅3.5*35 16x
E ∅3.0*20 8x	F ∅3.0*25 2x	G ∅3.0*16 24x	H ∅3.0*10 4x

I 24x	J 8x	K 1x	L 4x	M 4x

N 2x	O 2x	P 2x	Q 2x

ASSEMBLY TOOLS REQUIRED(NOT INCLUDED)



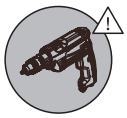

PLEASE BE CAREFUL DO NOT DAMAGE THE HOLE POSITION WHEN YOU USE POWERTOOLS !

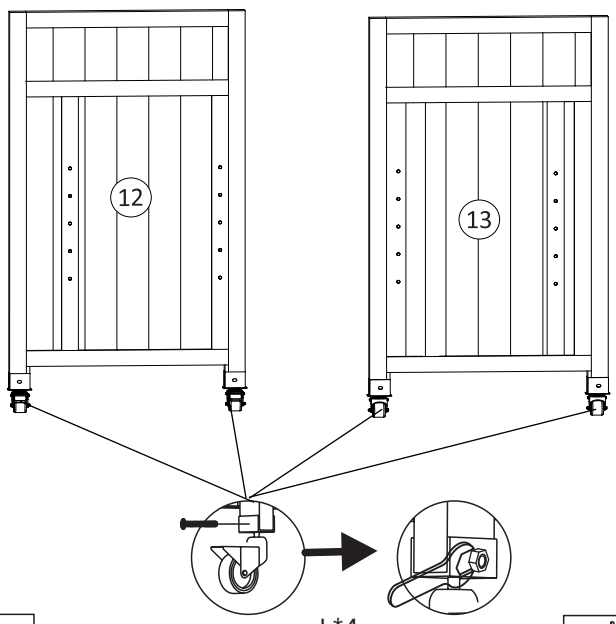

L*4

1



L*4

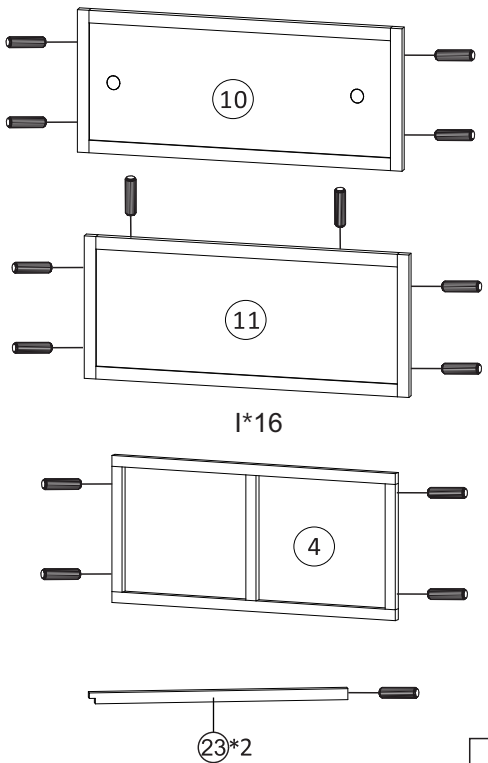

I*16

2



I*16

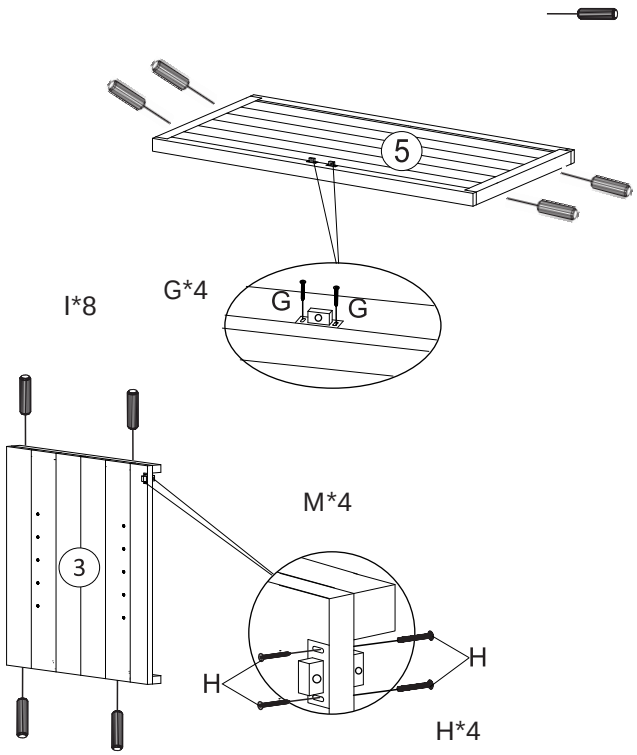

3

M*4	I*8	H*4	G*4

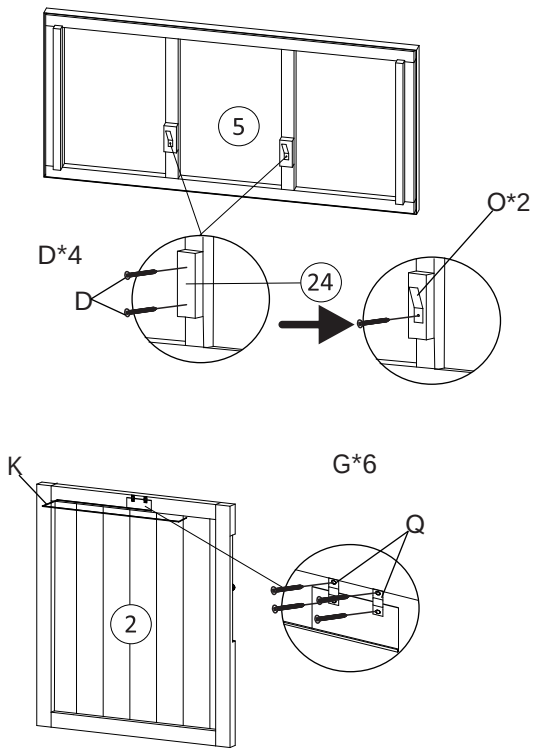

4

				Q*2
K*1	O*2	G*6	D*4	

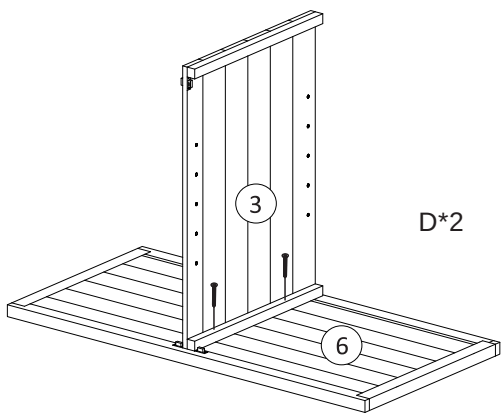

5

D*2

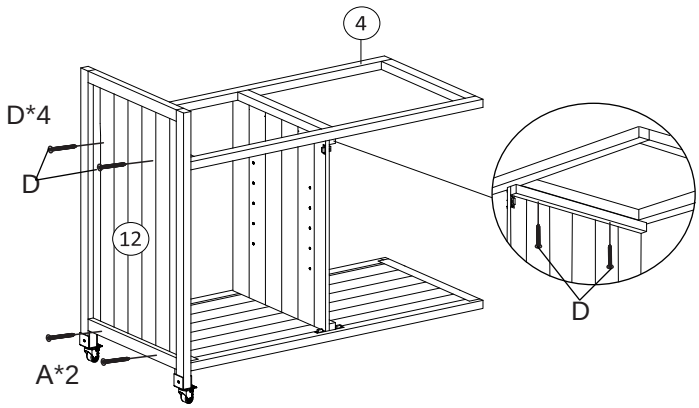

6

D*4	A*2

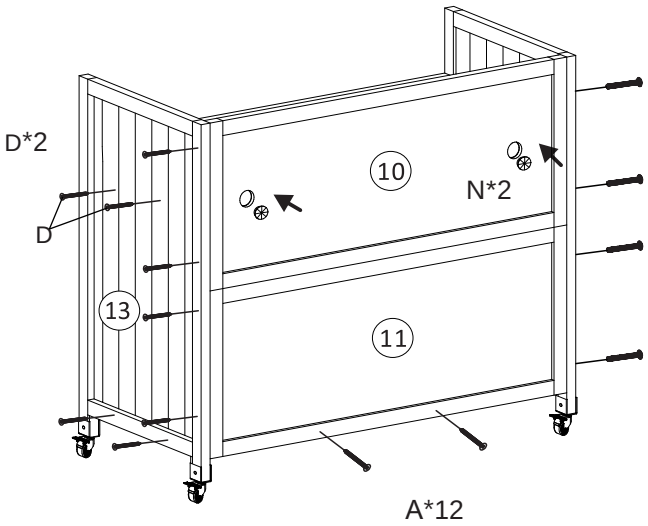

7

3.5*35MM		3.5*45MM
D*2	N*2	A*12

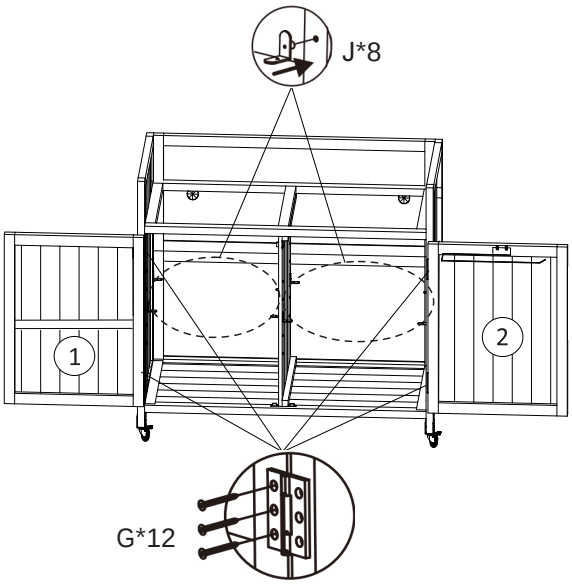

8

	3.0*16MM
J*8	G*12

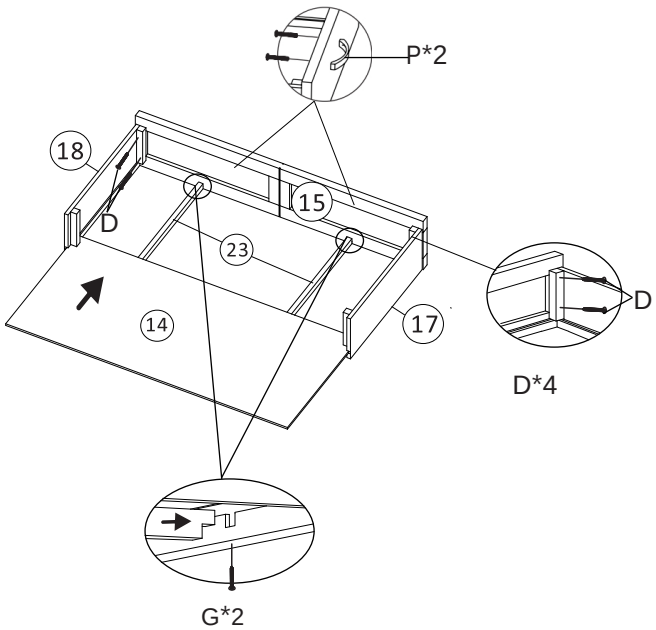

9

3.0*16MM		3.5*35MM
G*2	P*2	D*4

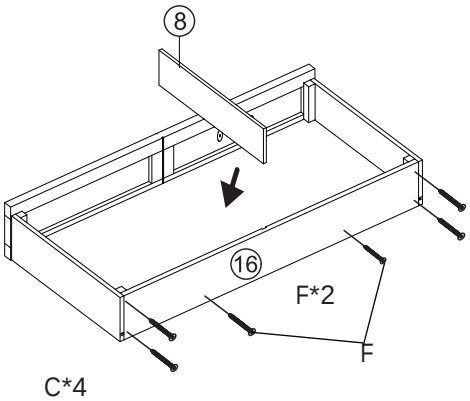

10

3.0*25MM	3.5*30MM
F*2	C*4

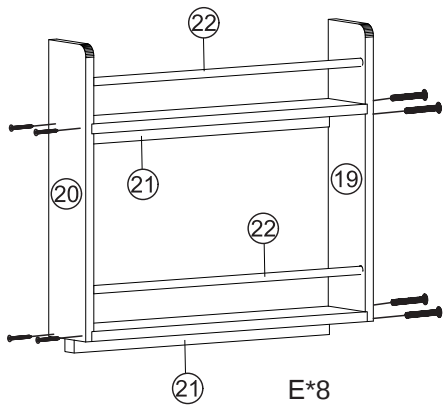

E*8

11

3.0*20MM

E*8

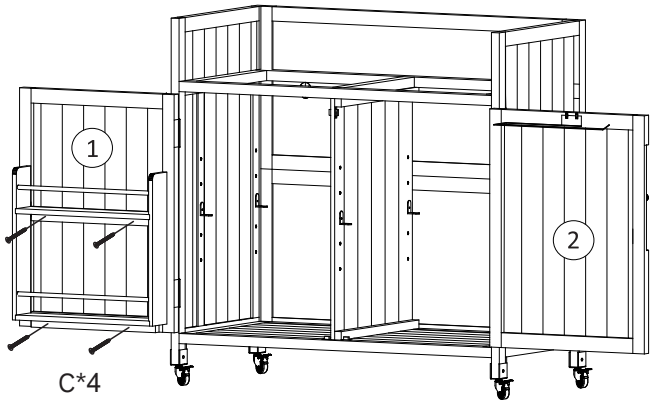

C*4

12

3.5*30MM

C*4

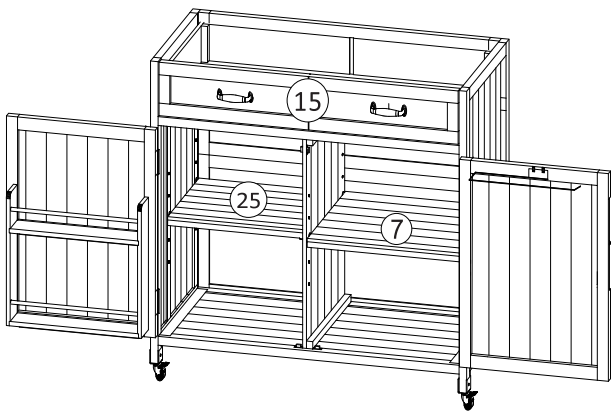

13

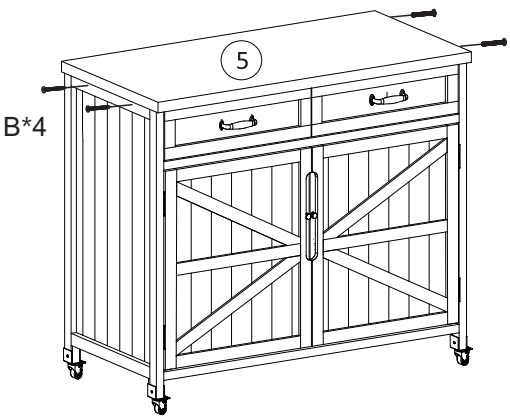

B*4

14

3.5*40MM

B*4

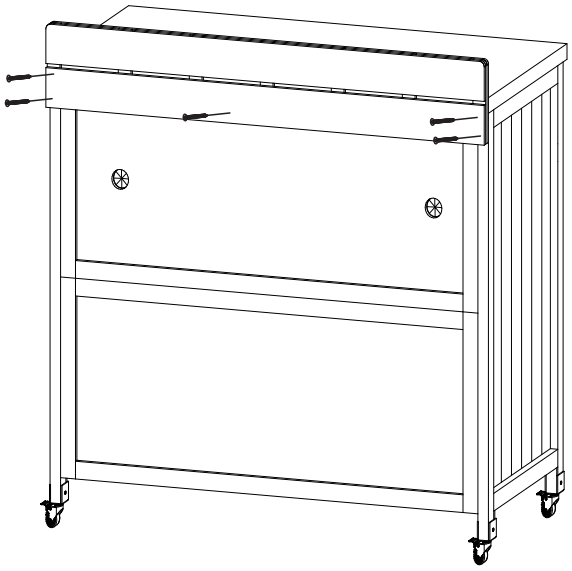

A*5

15



3.5*45MM

A*5

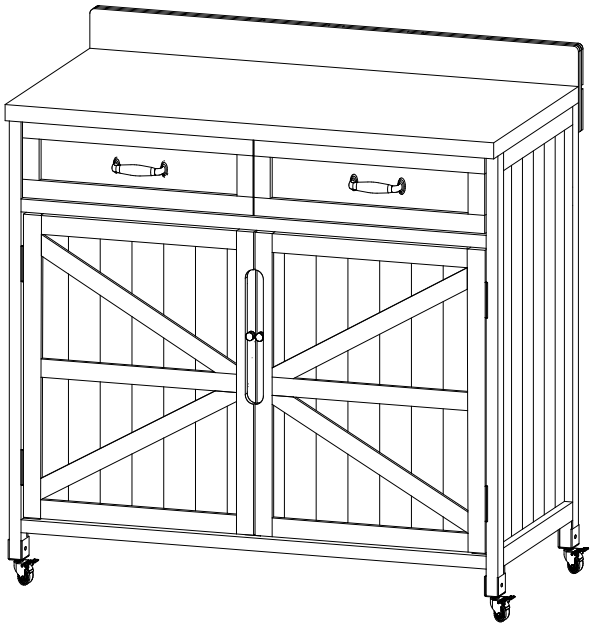

16

This Outdoor kitchen island with drawer unit can be used to add extra workspace and storage to outdoor sink unit (not included).

