Product Assembly Instructions

Thank you for purchasing this quality product. Be sure to check all packing material carefully for small parts, which may come loose inside the carton during shipment . Please identify and count all parts and compare with the HARDWARE LIST below.

Caution: Please read instructions carefully before unpacking assembly parts. Sharp, exposed staples can cause injury; therefore, for your protection, please remove any exposed staples used in packing.

* Retain the Allen key for regular maintenance. We recommend tightening all screws every three months to ensure continued stability and performance. *

1. We recommend assembling this product with the assistance of another person. This will help ensure a smooth assembly process and reduce the risk of injury or damage to the product.
2. Please do not overtighten screws or bolts until assembly is complete.
3. Please place all parts on a smooth, flat surface before assembly, and carefully follow the instructions to assemble your newly purchased product correctly and efficiently.

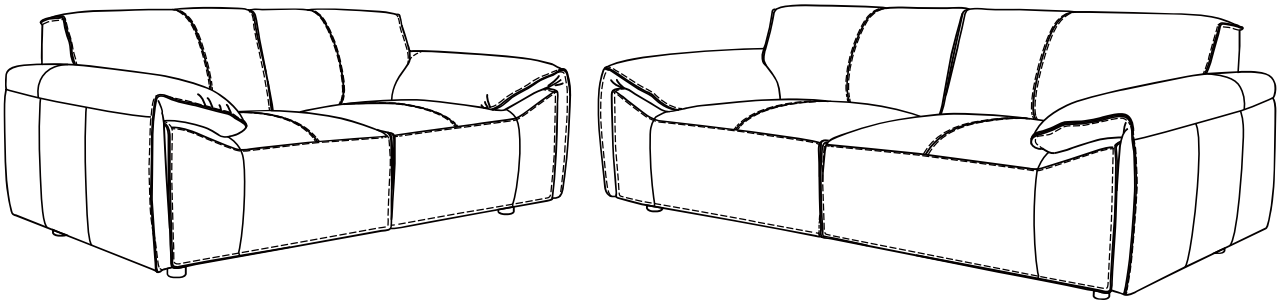

HARDWARE LIST			
NO.	COMPONENT	LOVESEAT	SOFA
1	Legs 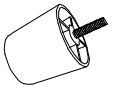	4 pcs	5 pcs

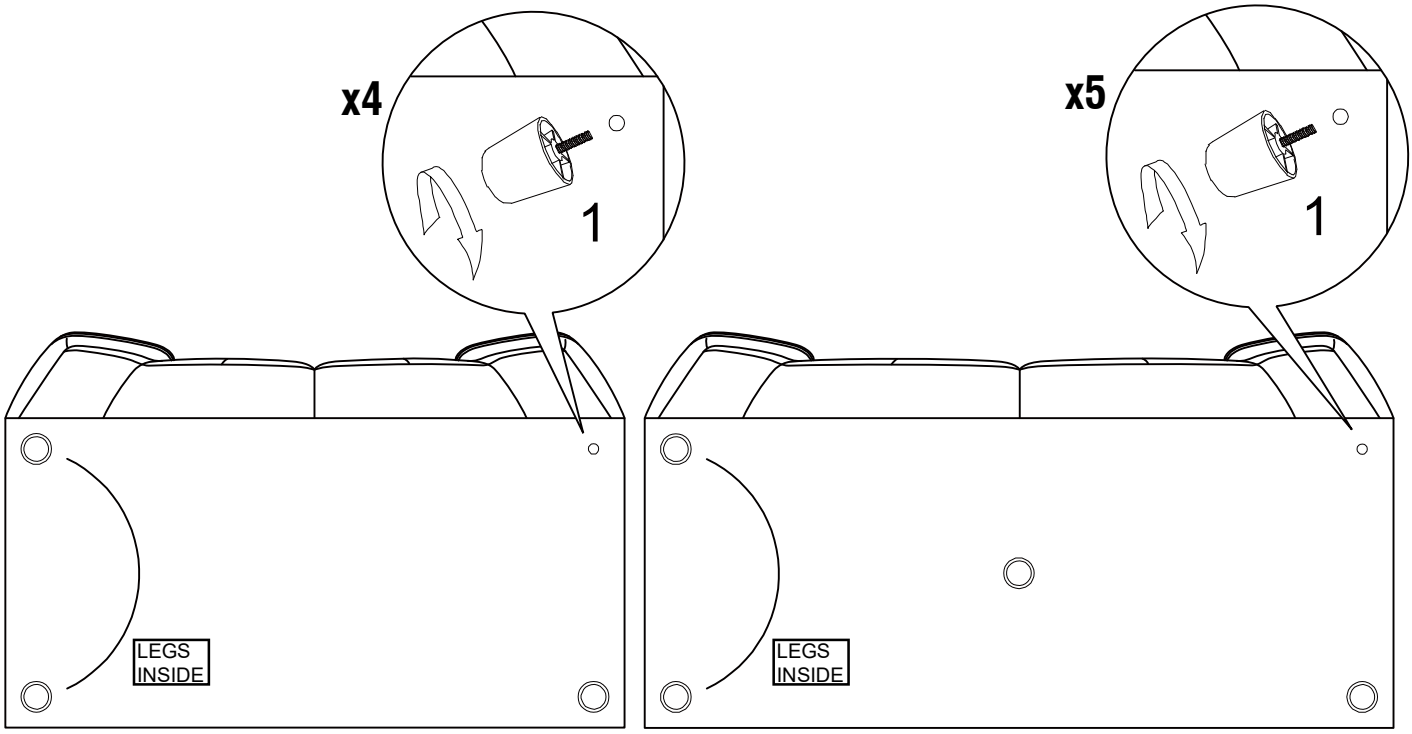

Loveseat Sofa

Step 1:
Place the sofa or loveseat on its back against a soft, clean surface to prevent scratches or damage.

Step 2:
The legs are packed inside the zipper. To remove them, just unzip it.

Step 3:
Attach the legs (1) to the base as shown in the diagram, turning them clockwise until securely tightened.