# ASSEMBLY INSTRUCTION

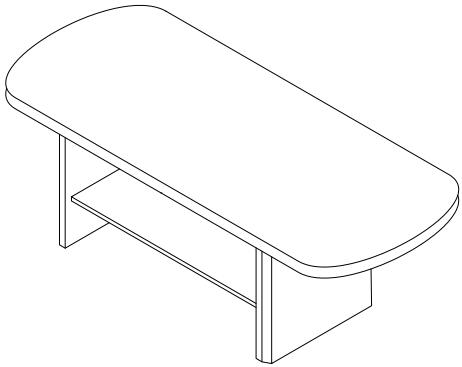

| | | | | |
|---|---|---|---|---|
| A | B | C | D | E |
|  |  |  |  | 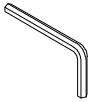 |
| M8x400mm X4 | M8x16mm X4 | M10x18mm X4 | X4 | 5# X1 |
| F | G | H | I | J |
|  |  |  | 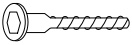 |  |
| X4 | X4 | X8 | M7x60mm X4 | 4# X1 |
| 1 | 2 | 3 | 4 | |
| 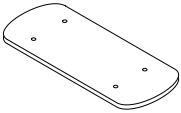 | 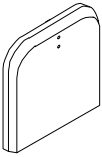 | 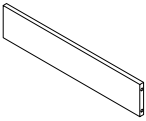 | 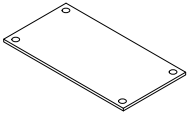 | |
| X1 | X2 | X1 | X1 | |

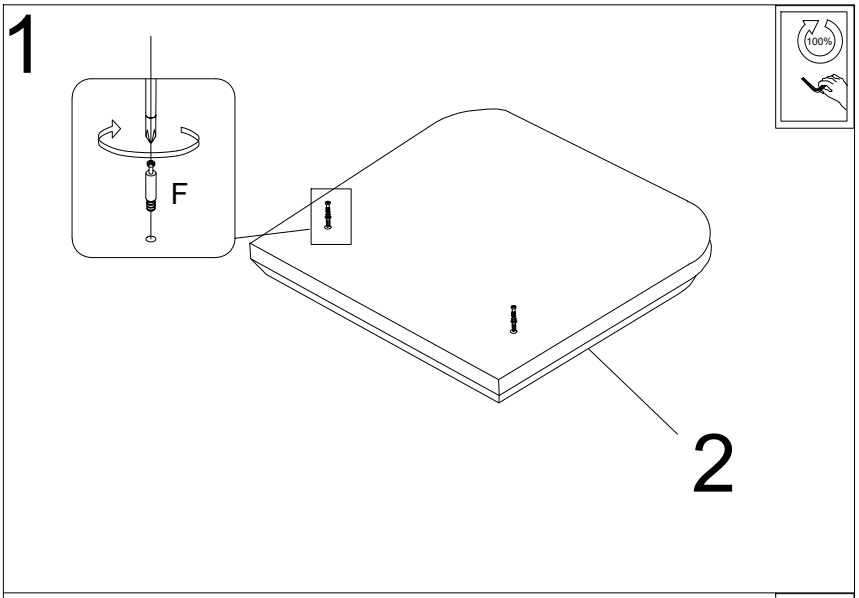
1
F
2
100%

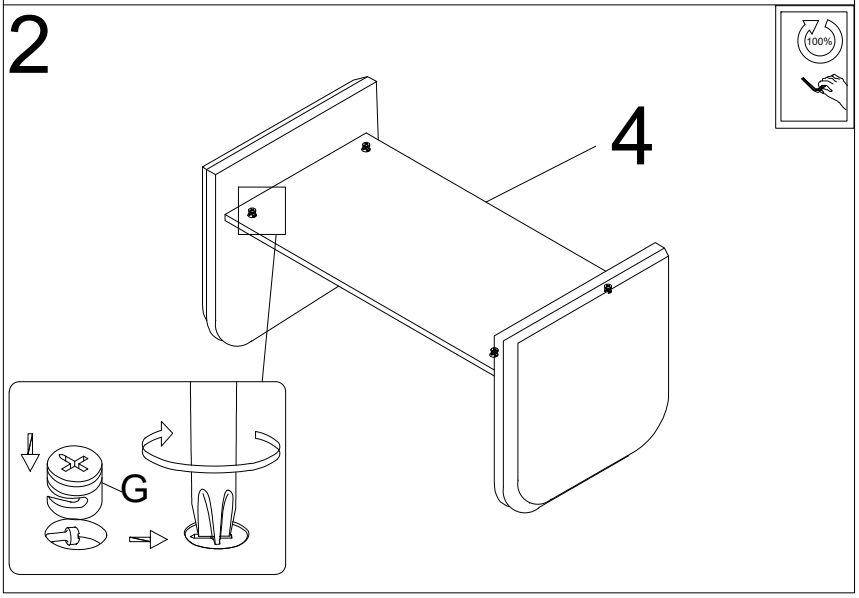
2
4
G
100%

3

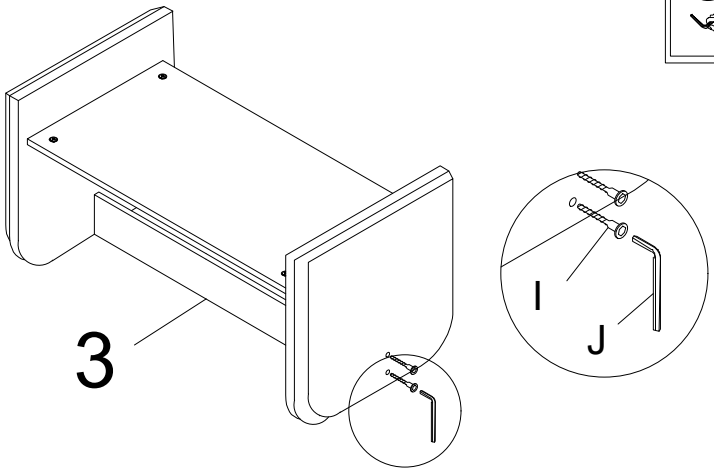


4

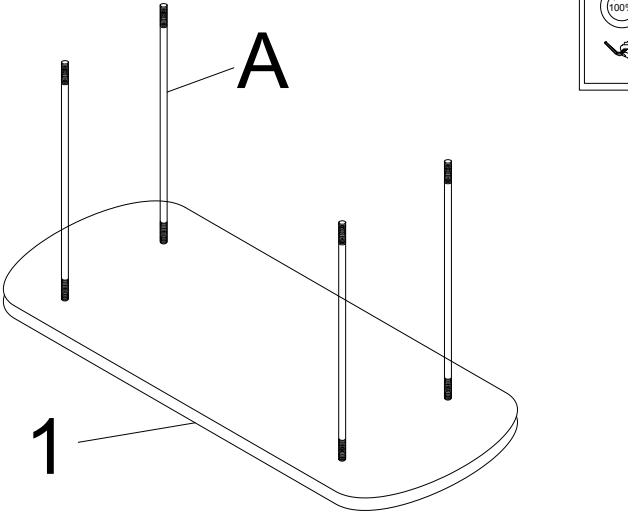

5

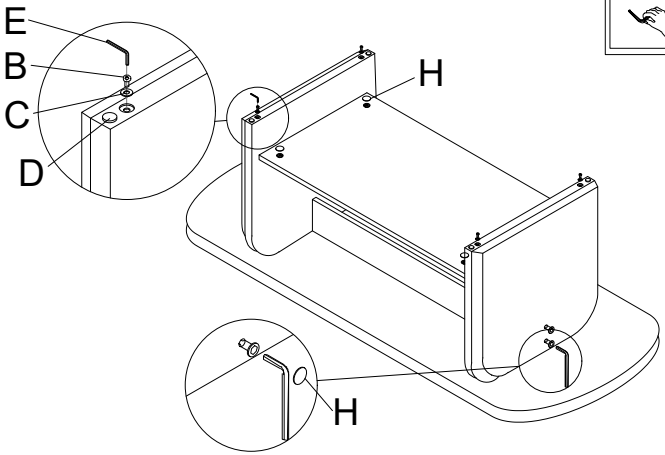


6

