SAGE – RTV

Ver. 1

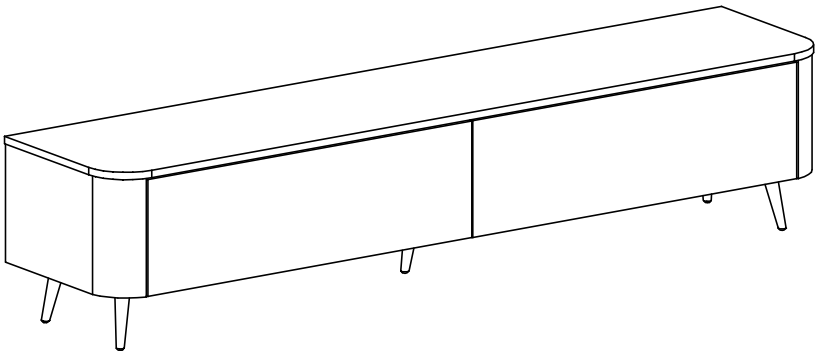

Ver. 2
(Hanging)

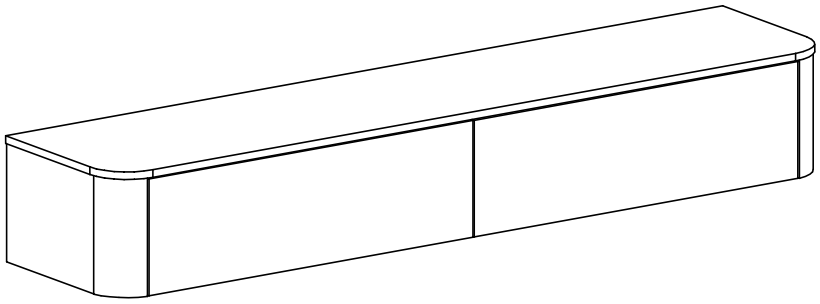

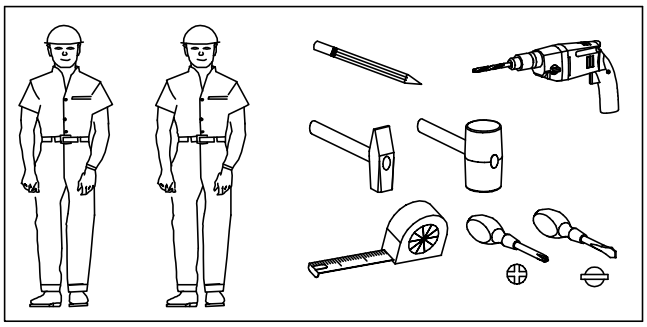

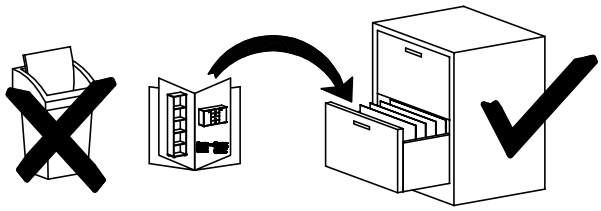

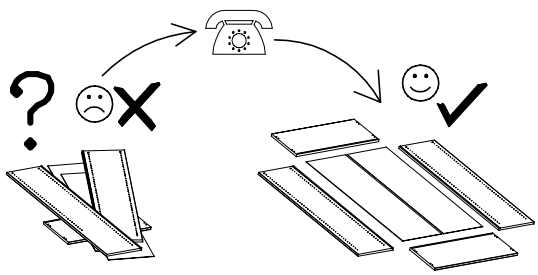

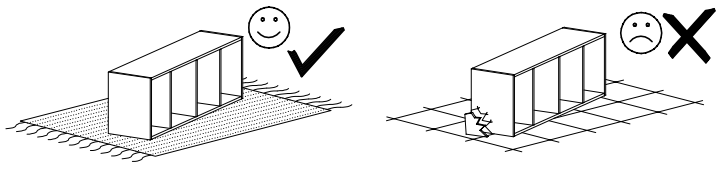

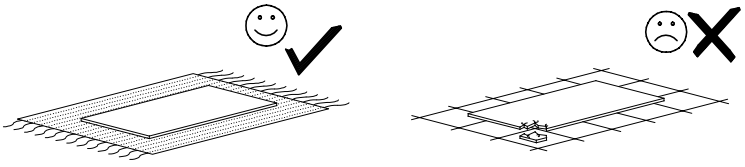

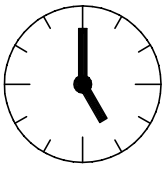

1,5h

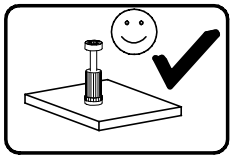

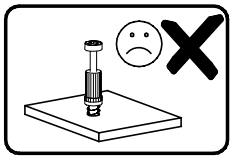

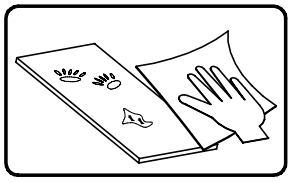

SAGE – RTV

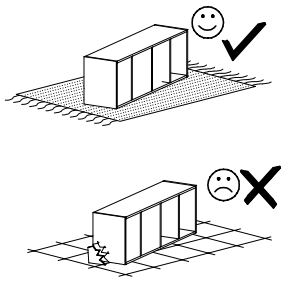

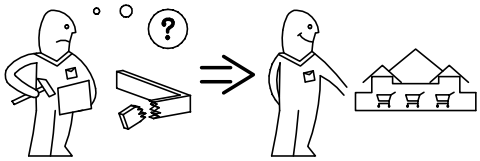

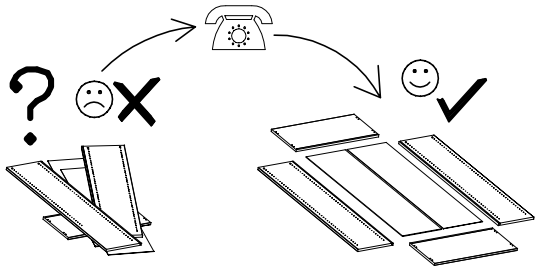

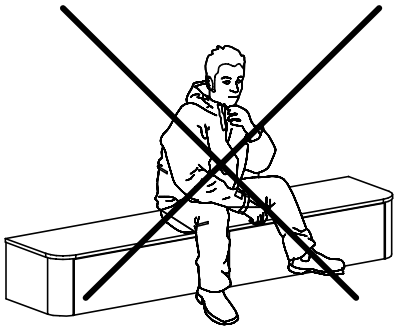

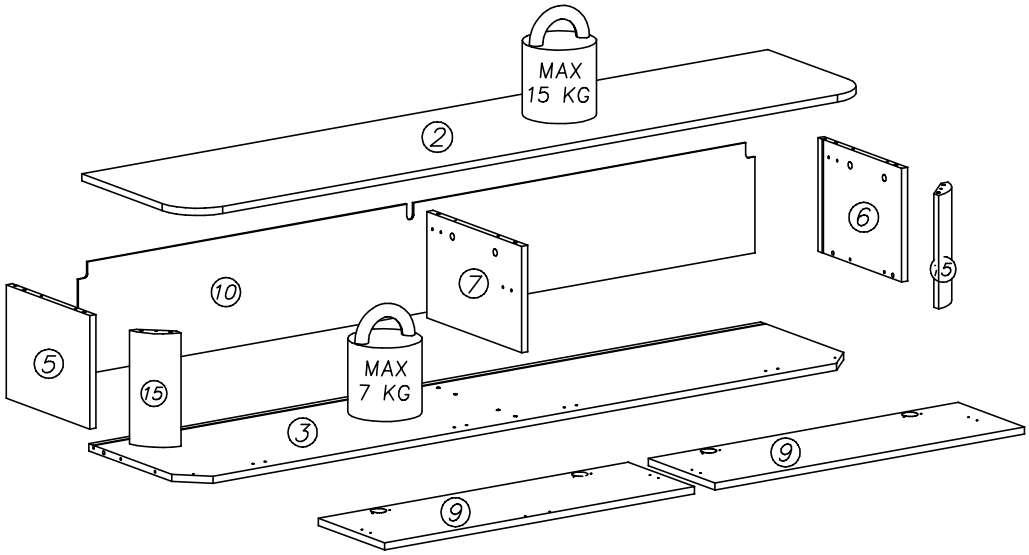

nr	L[mm]	B[mm]	T[mm]	Menge	Colli
2	1796	394	16	1	1/1
3	1759	374	16	1	1/1
5	252	312	16	1	1/1
6	252	312	16	1	1/1
7	236	354	16	1	1/1
9	248	811	16	2	1/1
10	1771	248	3	1	1/1
15	252	112	30	2	1/1

SAGE – RTV

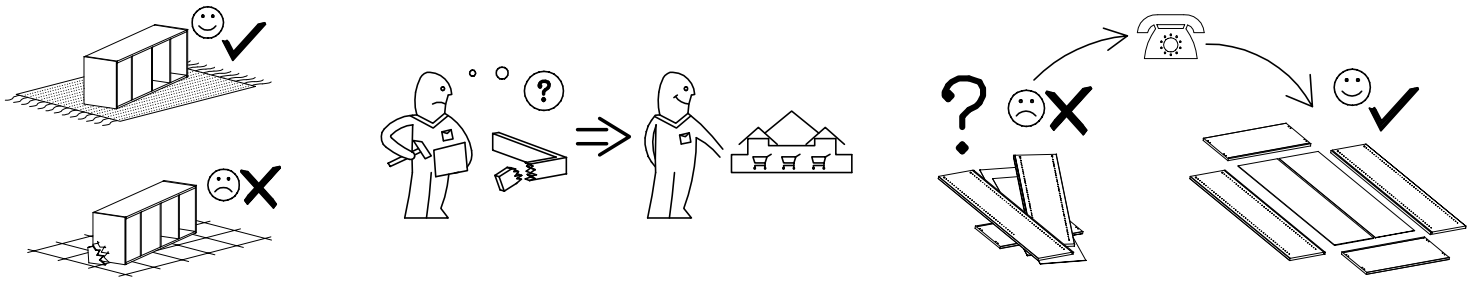

Ver. 1
Ver. 2

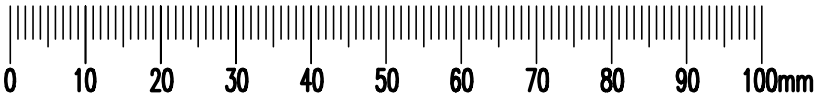

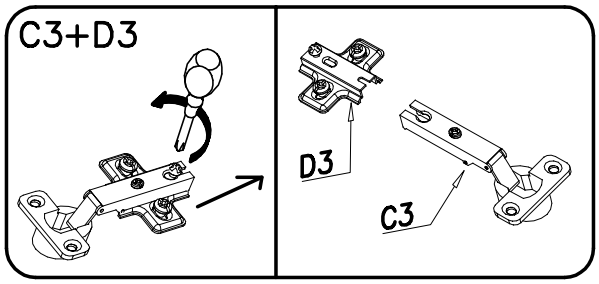

G4 3,5x16 x...(32)				
U7 x...(3)	U8 ø10x60 x...(3)	L6 x...(2)	G40 4x60 x...(2)	A1 ø7x50 x...(2)
U15L x...(1)	U15R x...(2)		U8 ø8x50 x...(2)	W2 x...(1)
U16R x...(2)	U16L x...(1)	L13 x...(2)	C3 Z35PR x...(4)	M11 x...(2)
K1 ø15x12 x...(12)	G42 6x14 x...(6)	G57 3,5x16 x...(4)	D3 H=2 PZ35PR x...(4)	I7 ø18 x...(12)
K7 x...(12)	F4 x...(2)	B1 ø8x35 x...(16)	G4 4x16 x...(20)	I1 x...(10)

Ver. 1

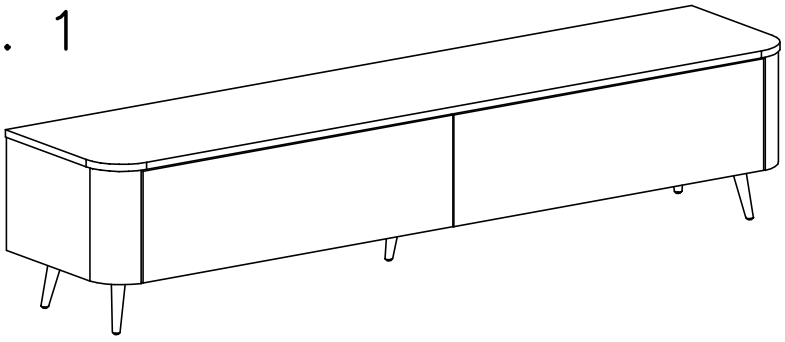

LEG x...(5)

SAGE – RTV

I

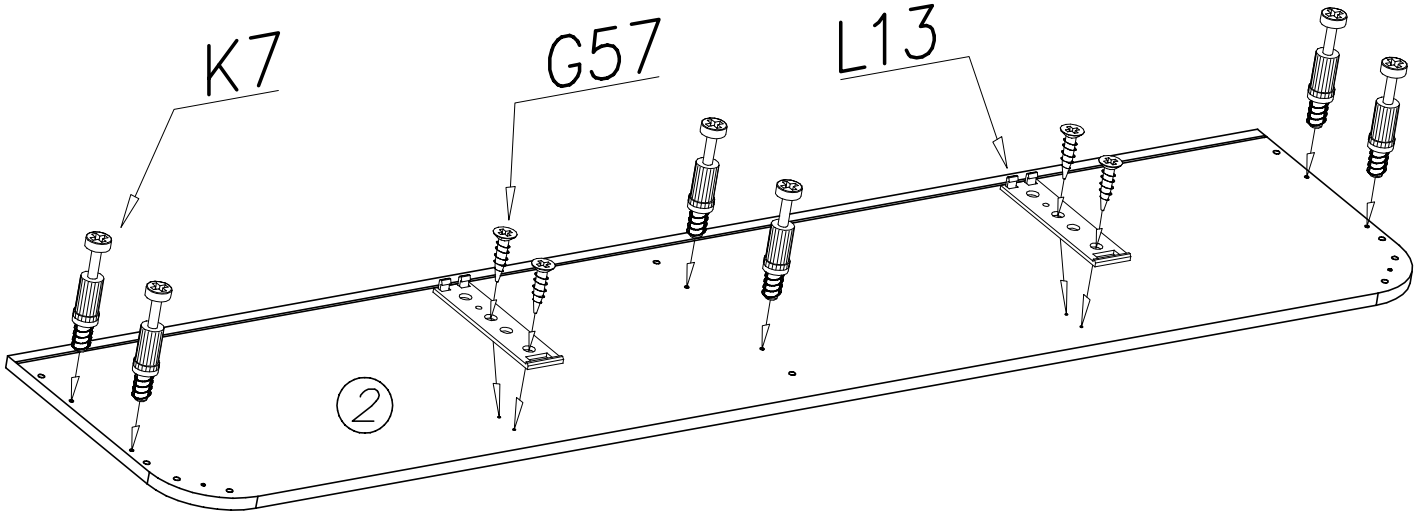

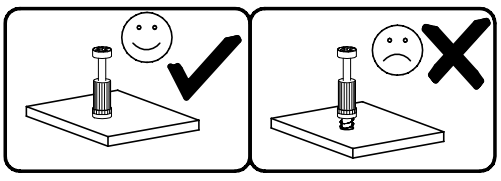

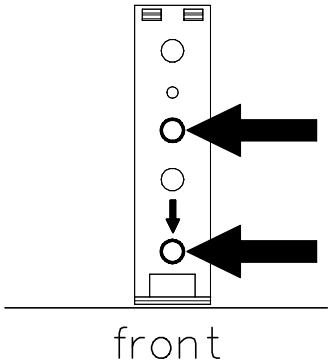

SAGE – RTV

III

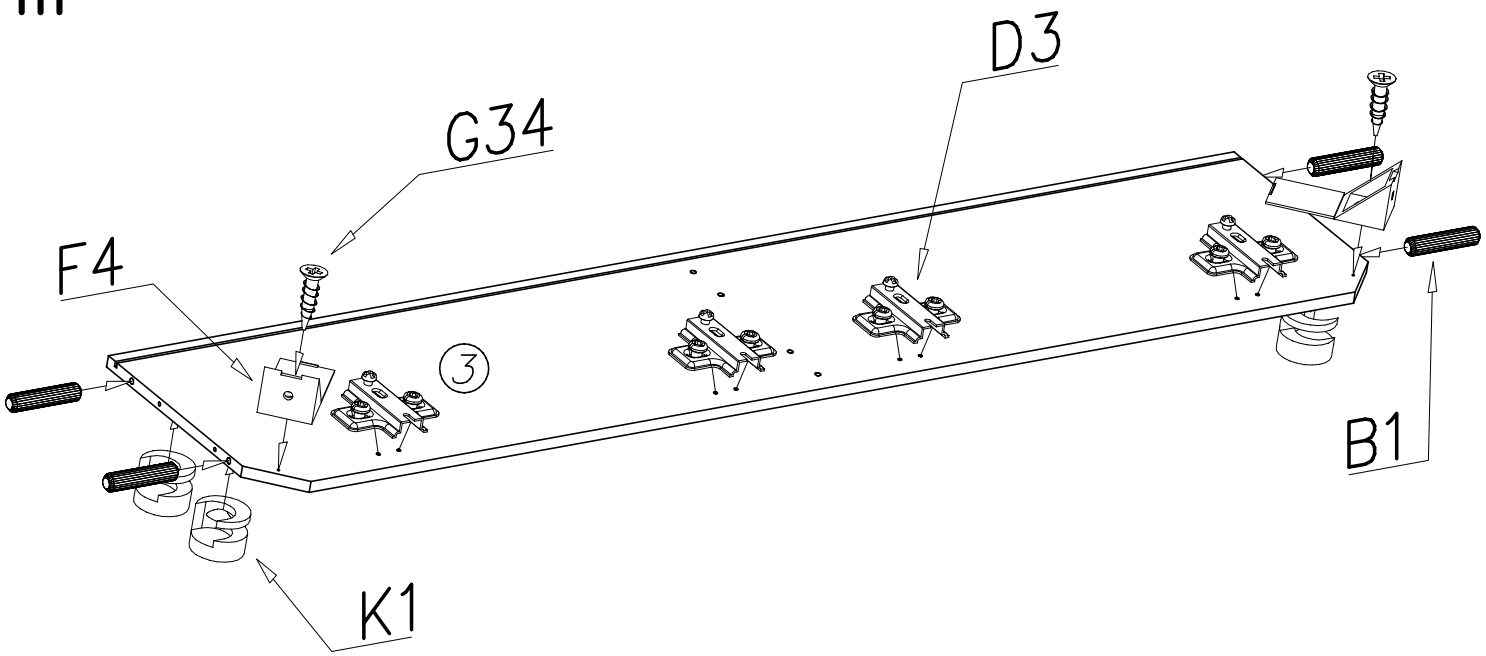

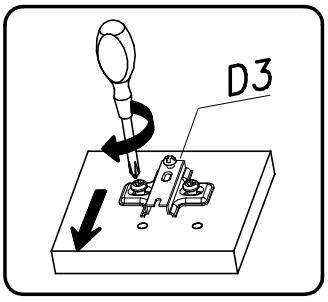

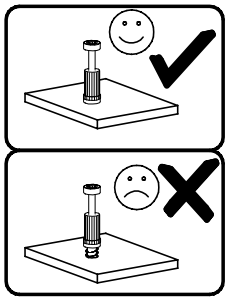

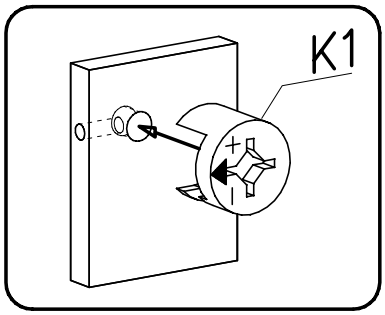

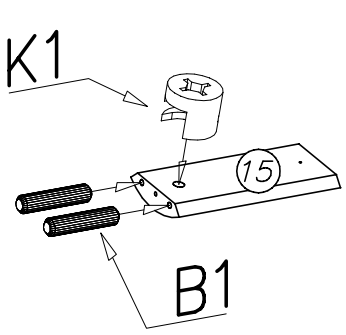

x2

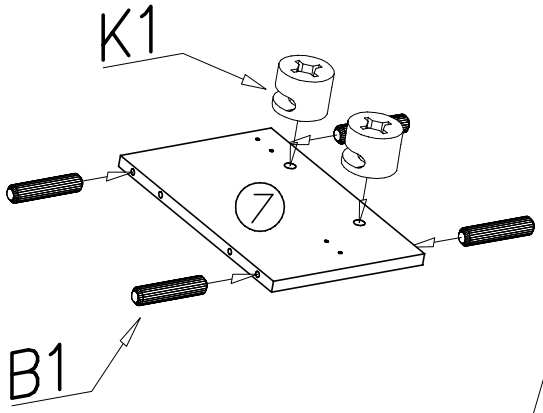

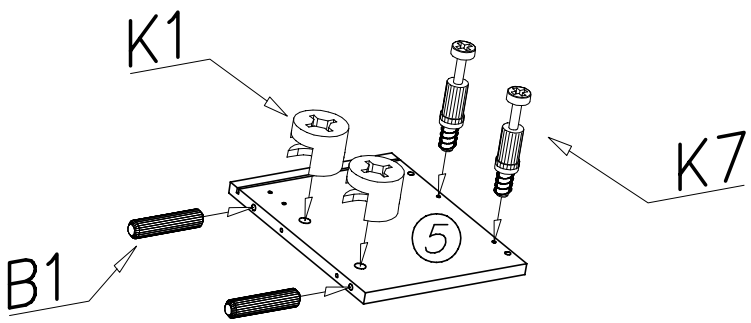

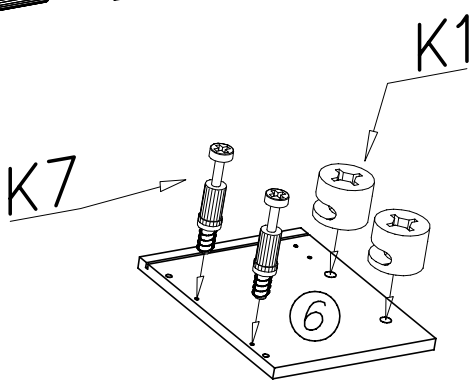

SAGE – RTV

IV

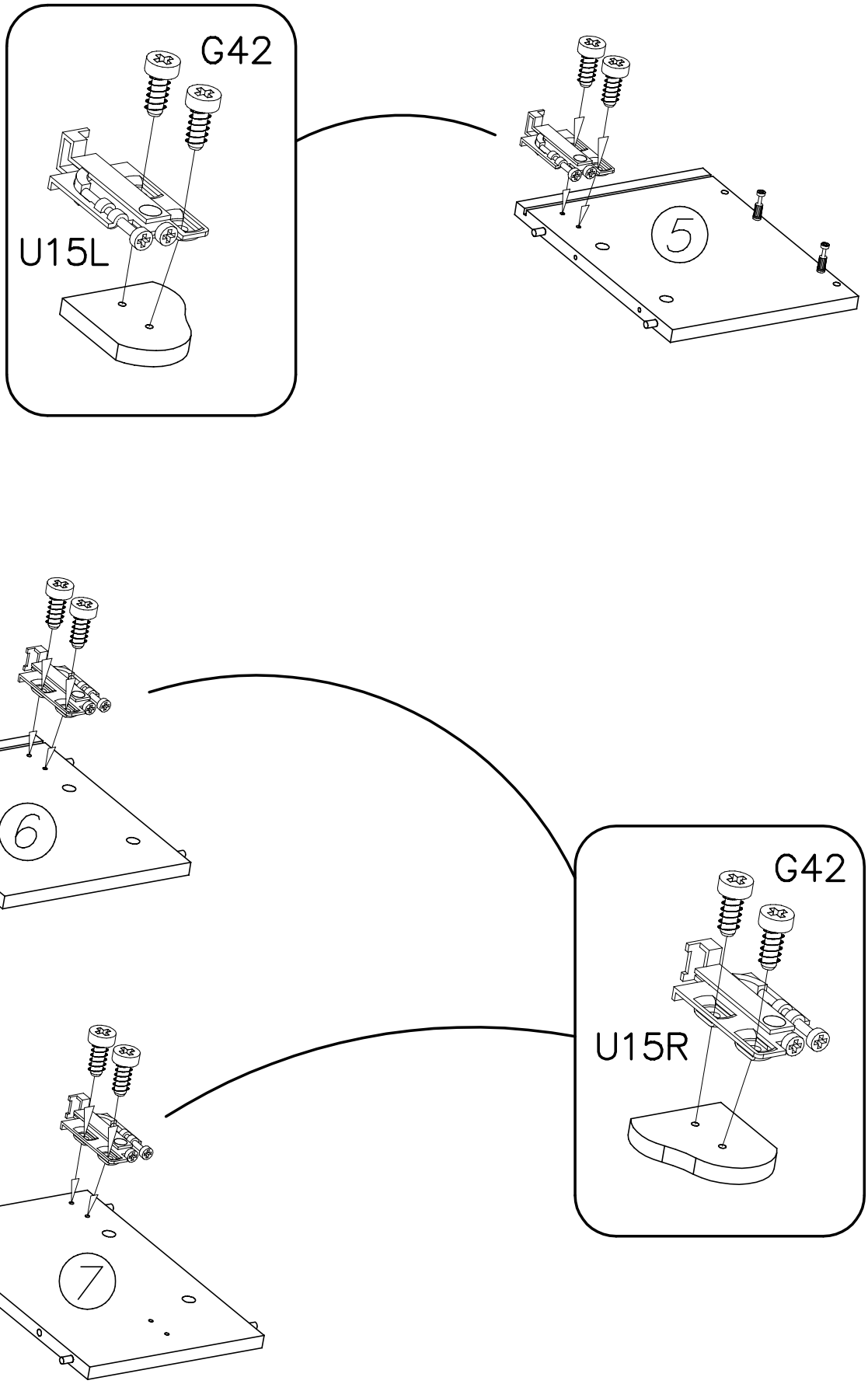

SAGE – RTV

V

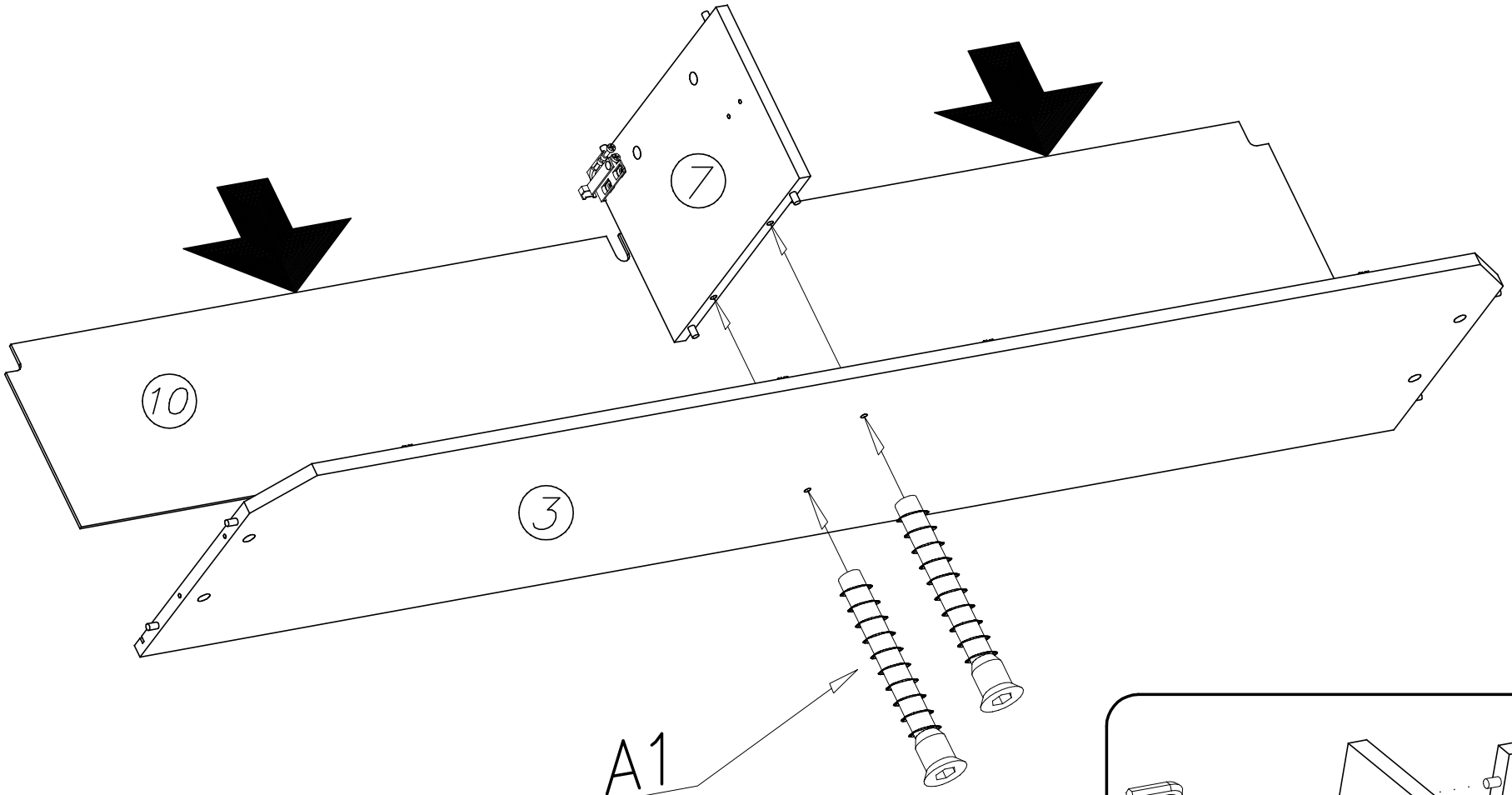

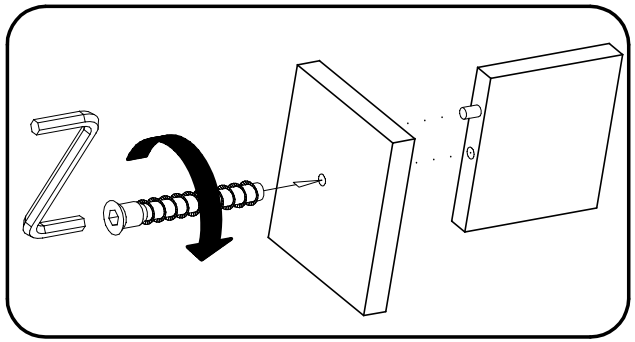

SAGE – RTV

VI

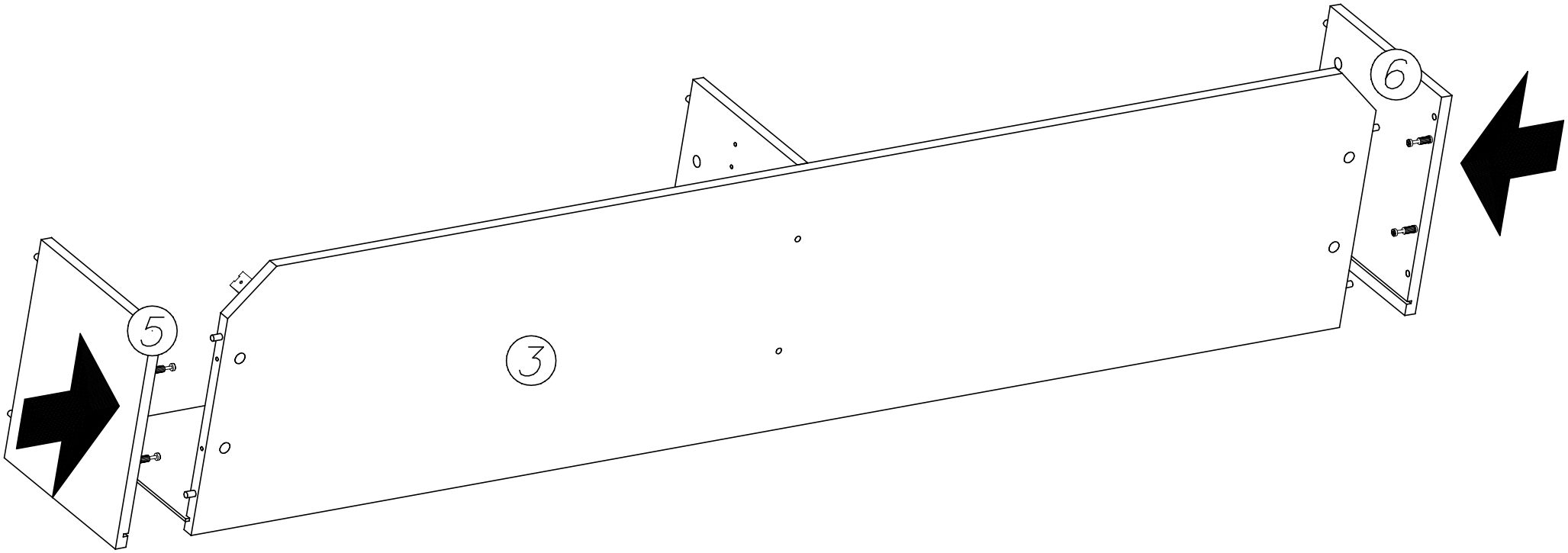

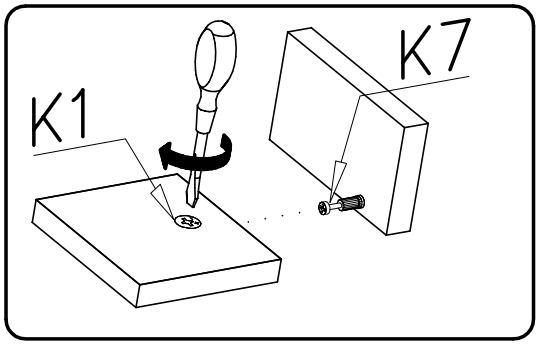

SAGE – RTV

VII

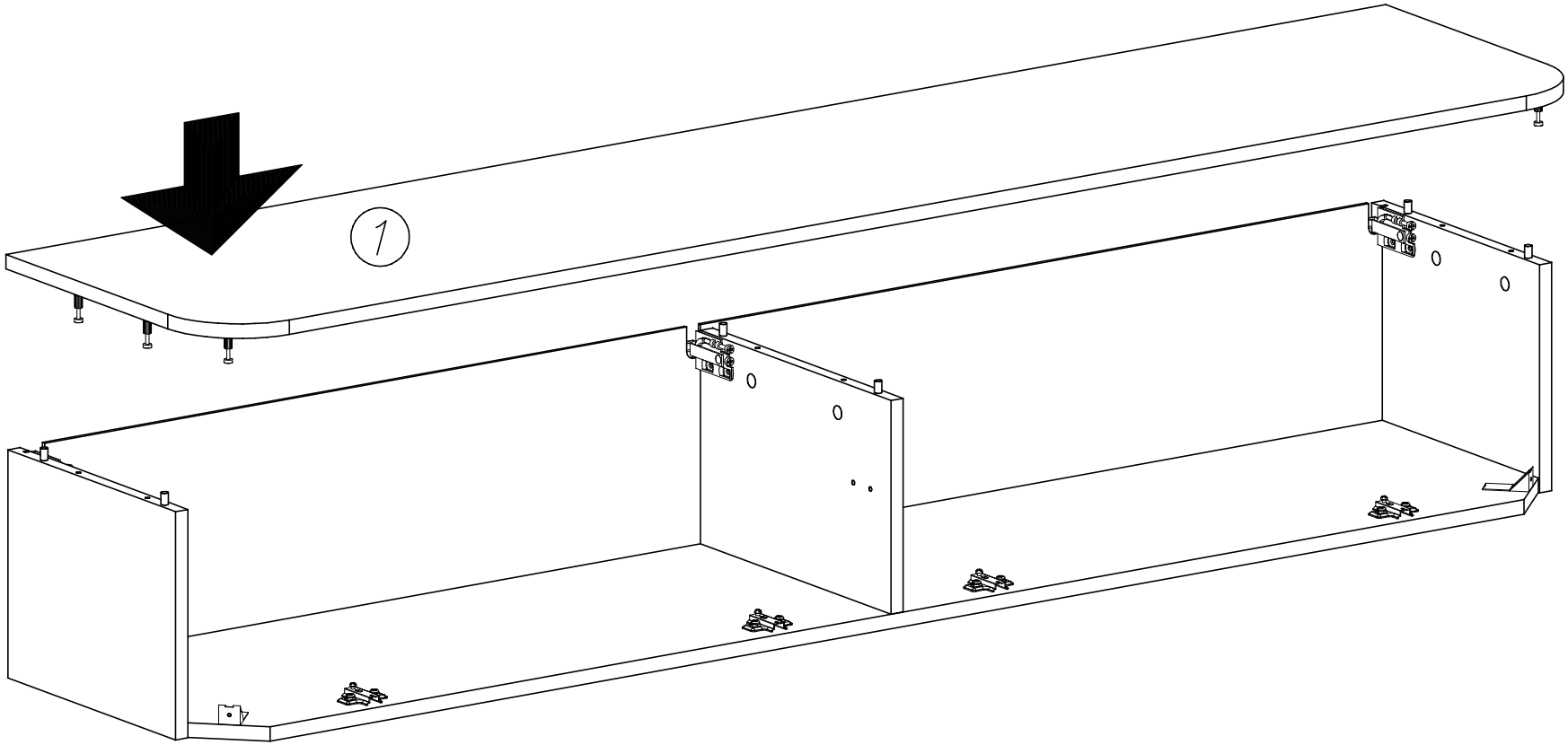

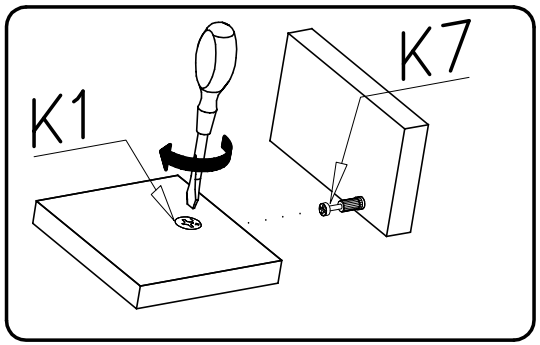

SAGE – RTV

VIII

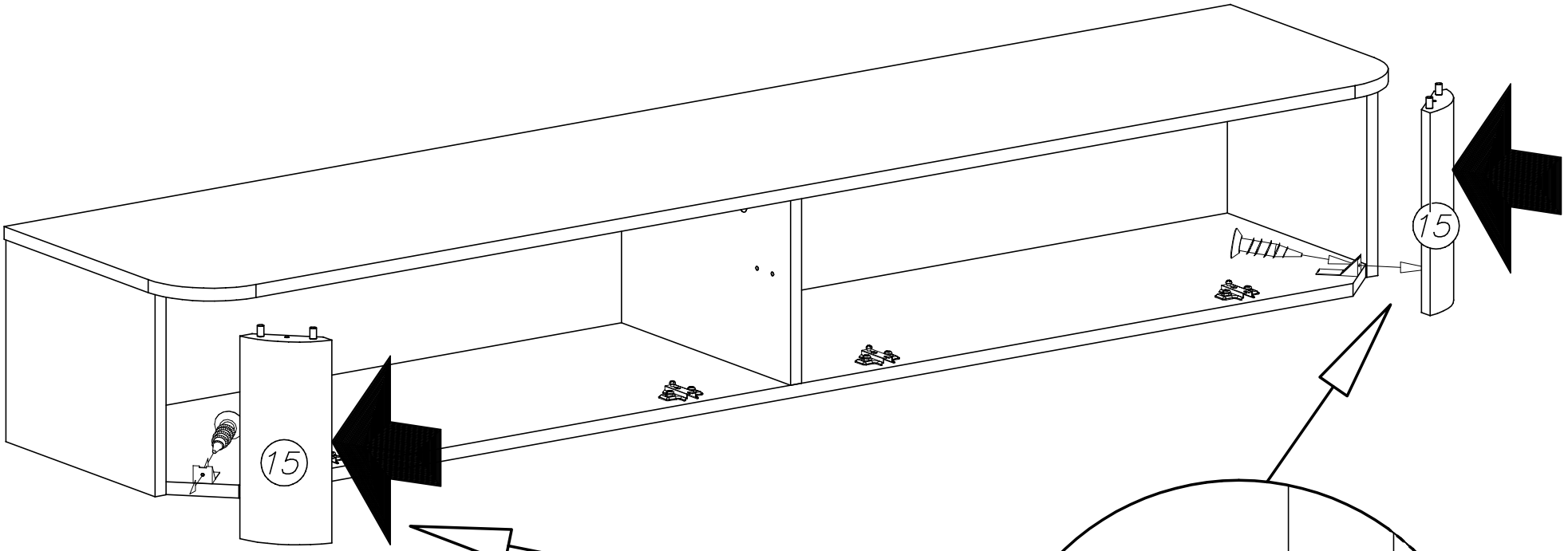

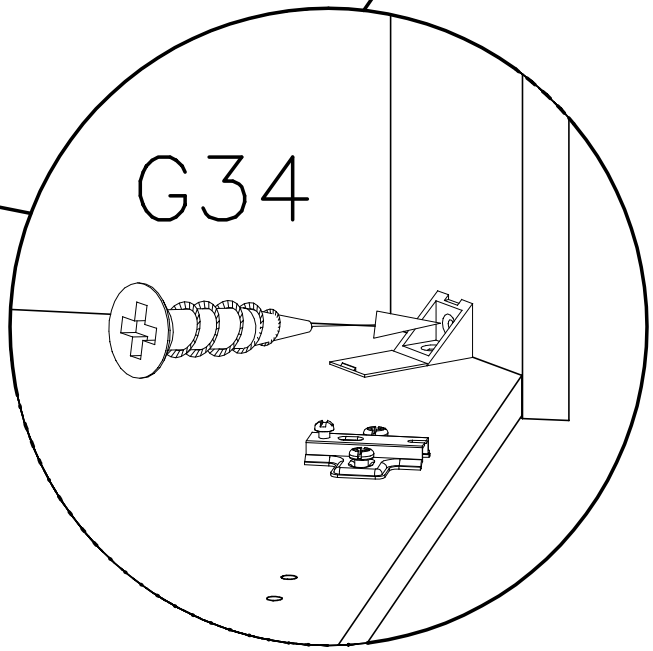

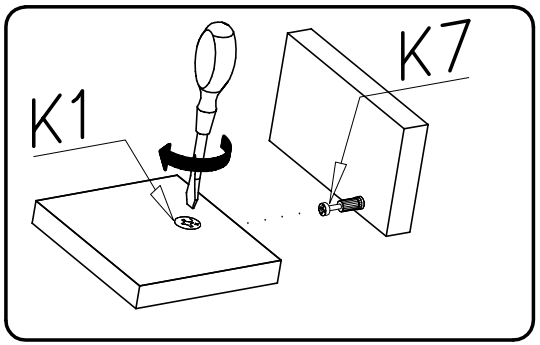

SAGE – RTV

IX

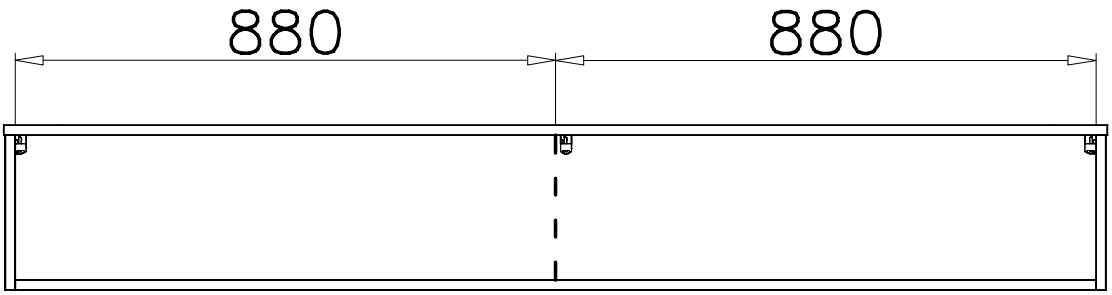

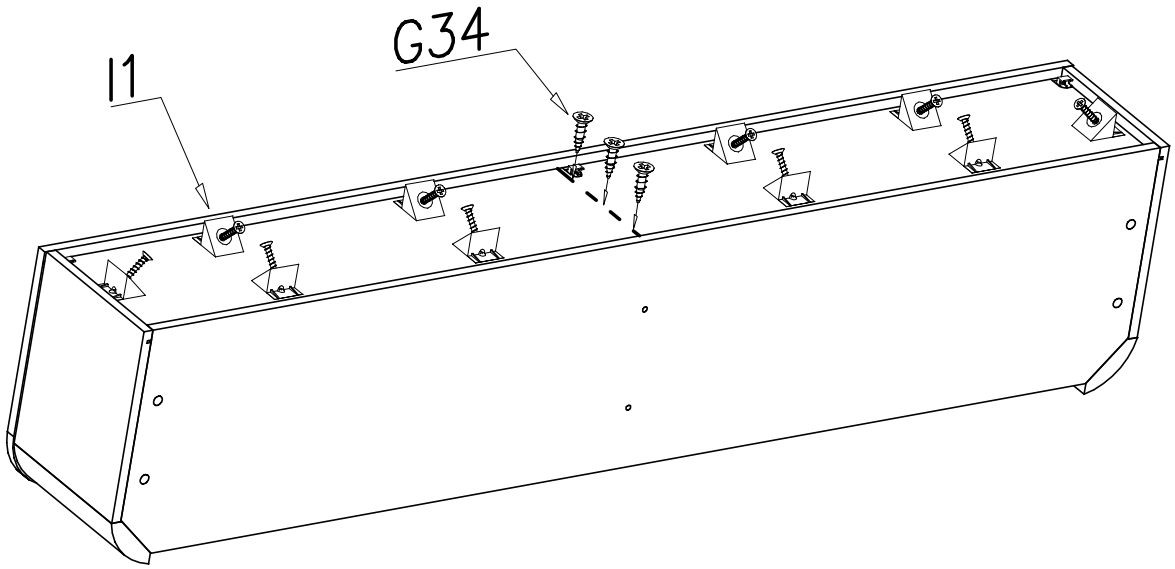

A=B

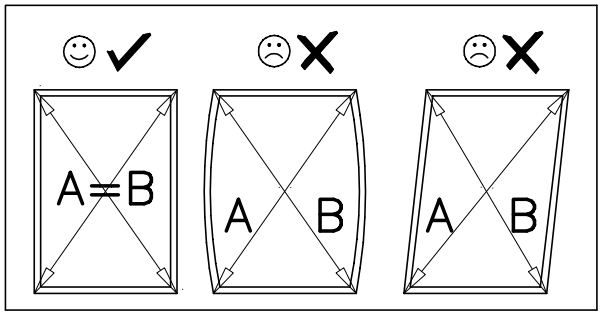

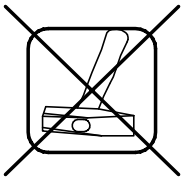

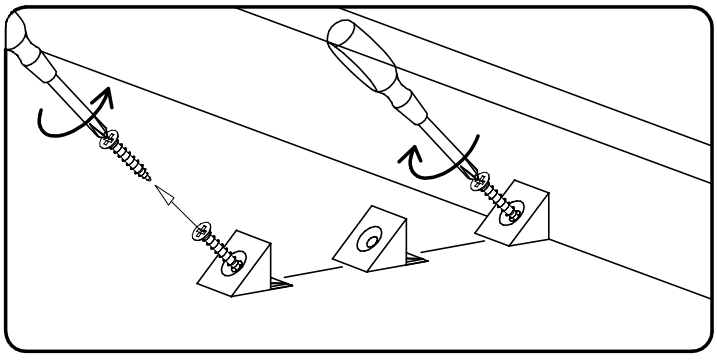

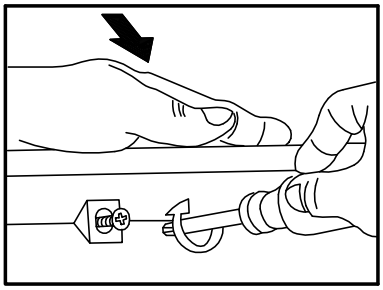

SAGE – RTV

X

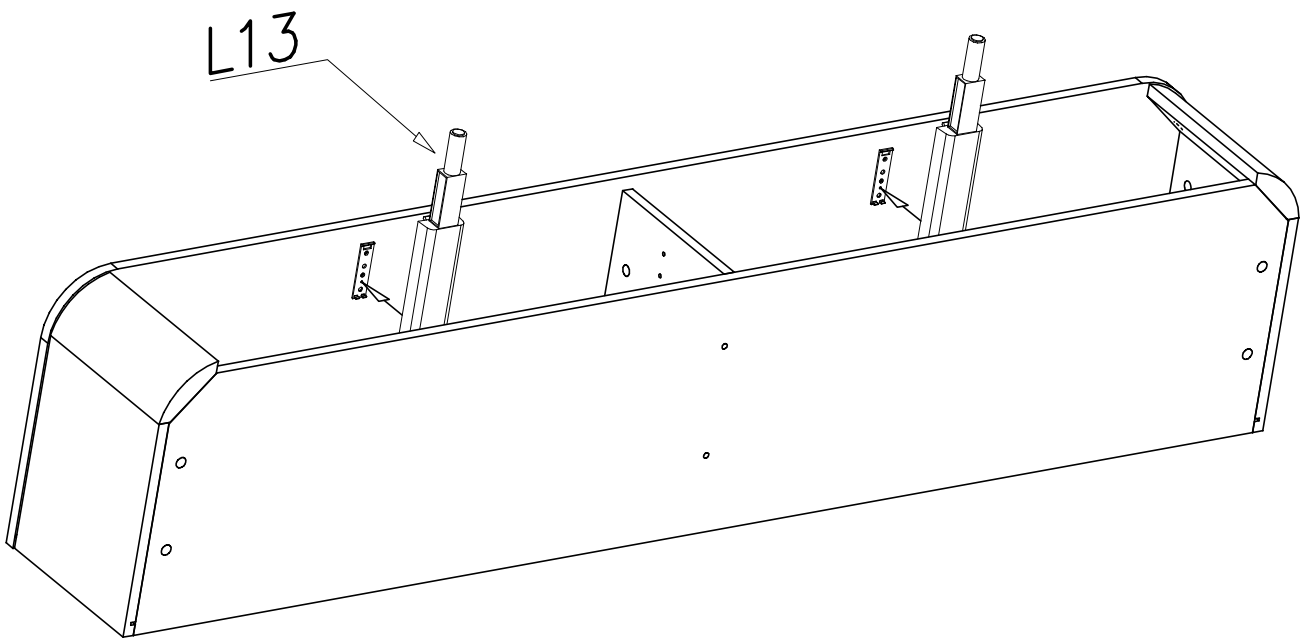

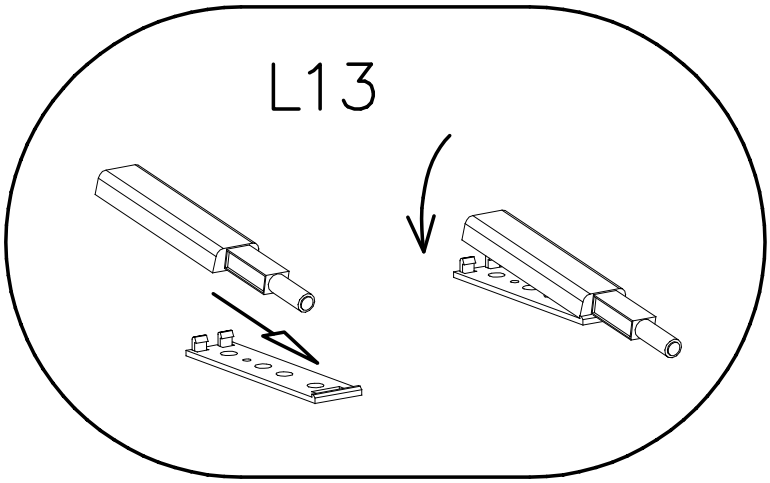

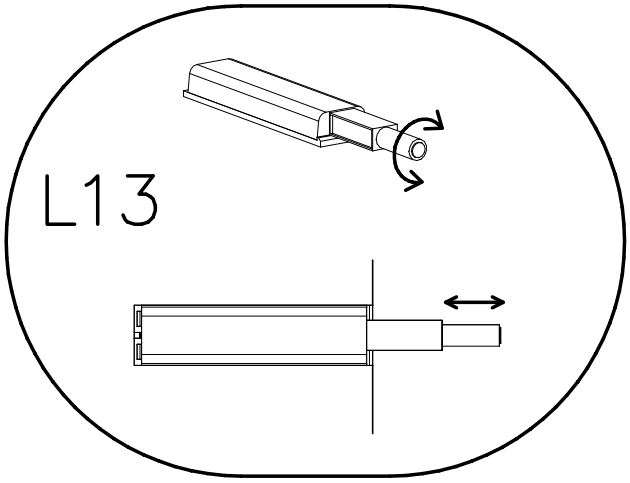

XI

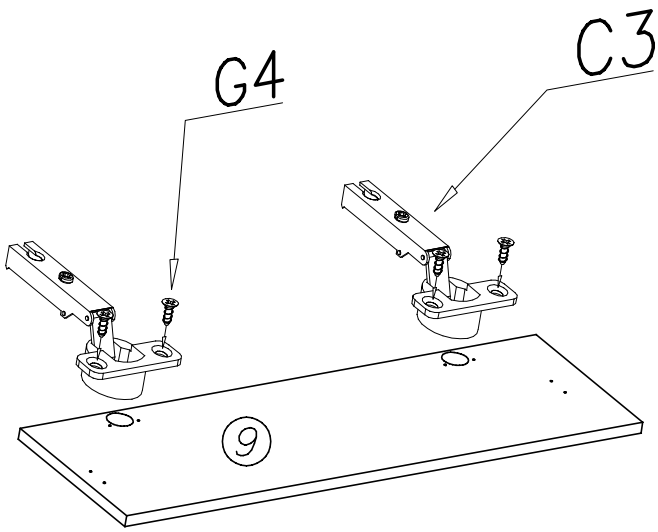

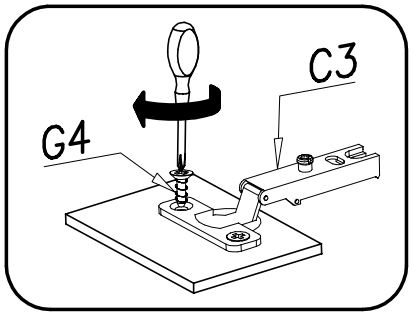

SAGE – RTV

XII

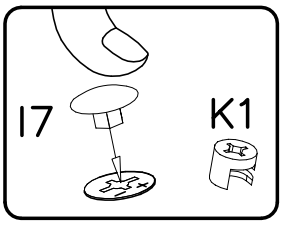

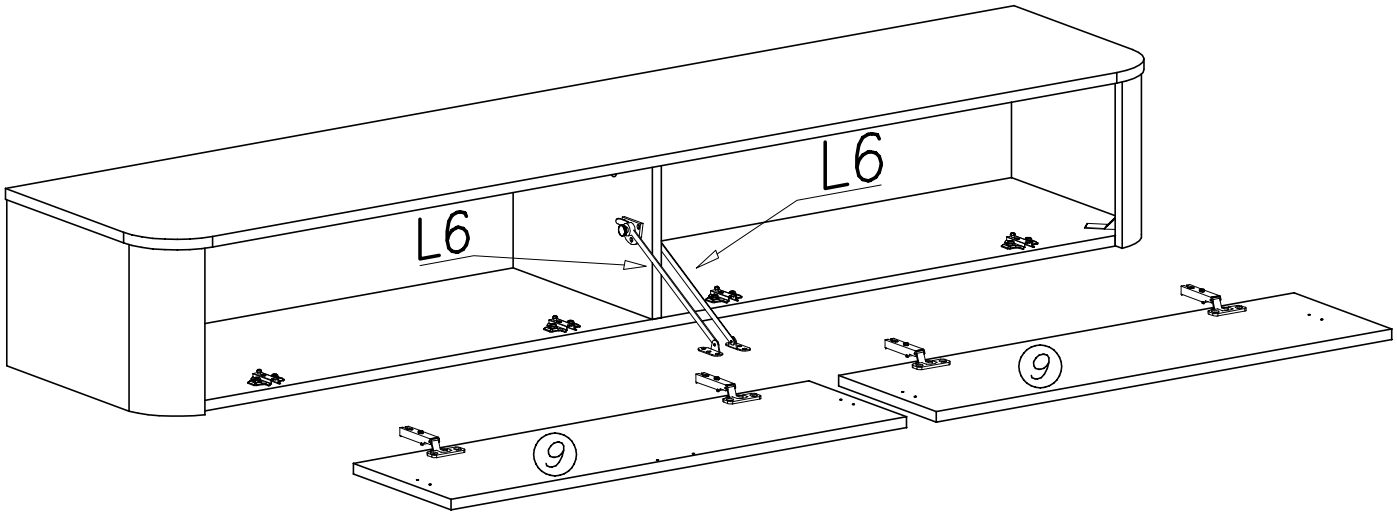

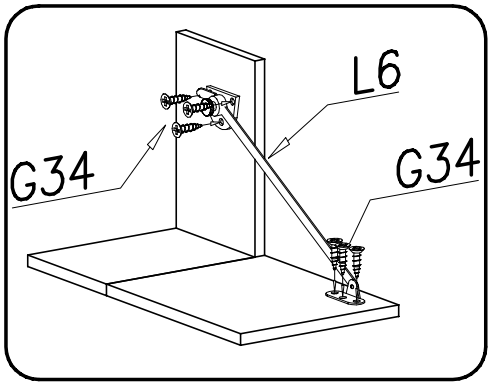

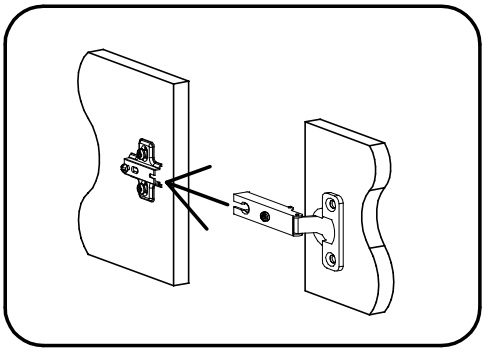

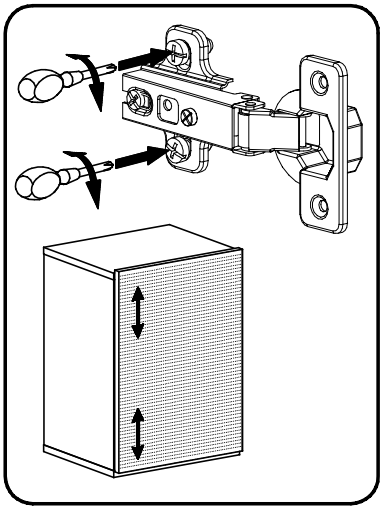

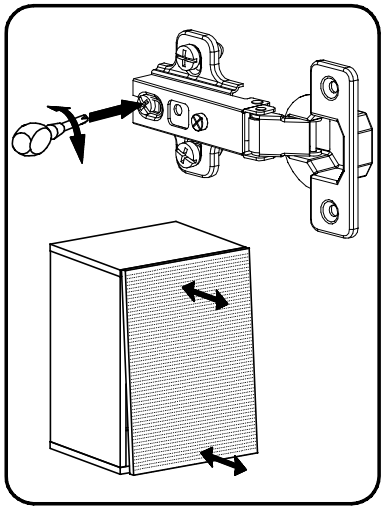

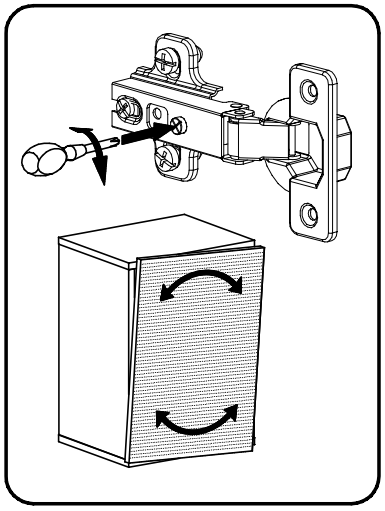

SAGE – RTV

XIII

Ver. 2
(Hanging)

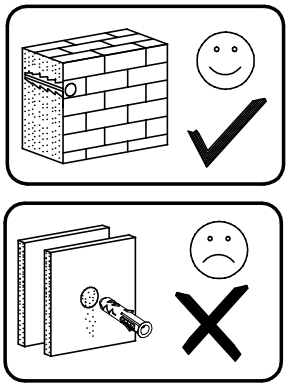

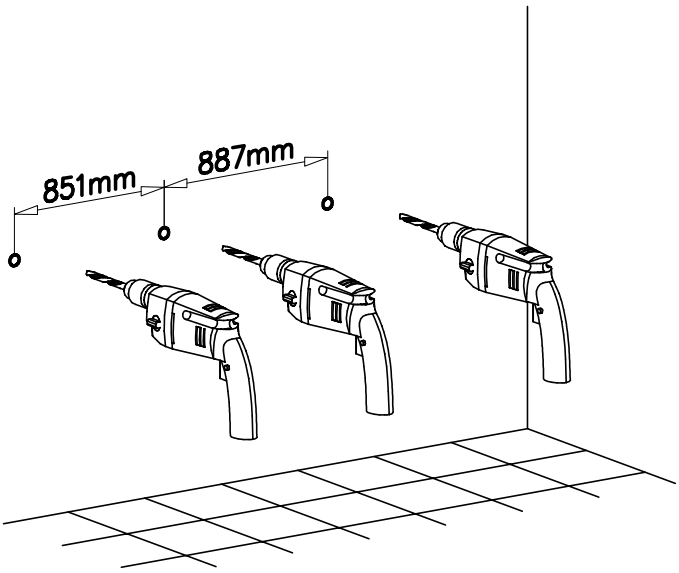

XIV

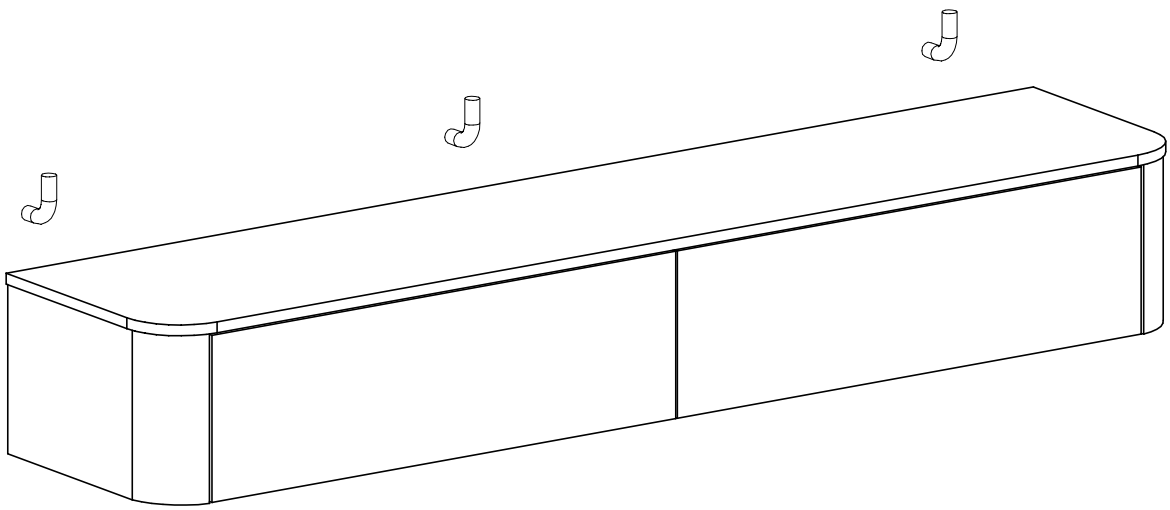

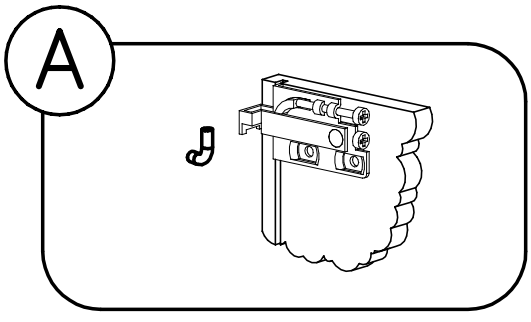

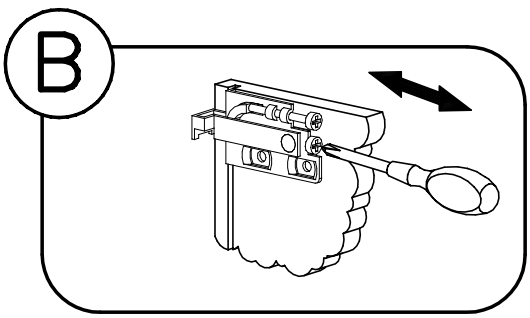

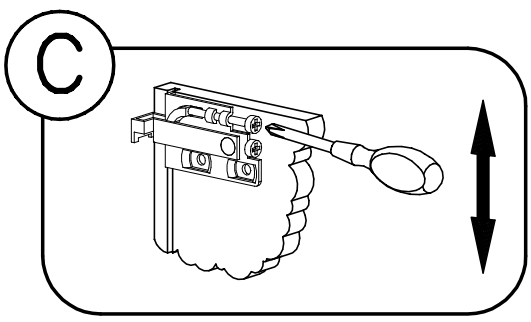

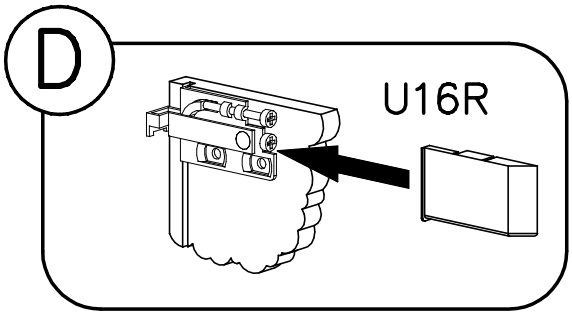

SAGE – RTV

XV Ver. 1

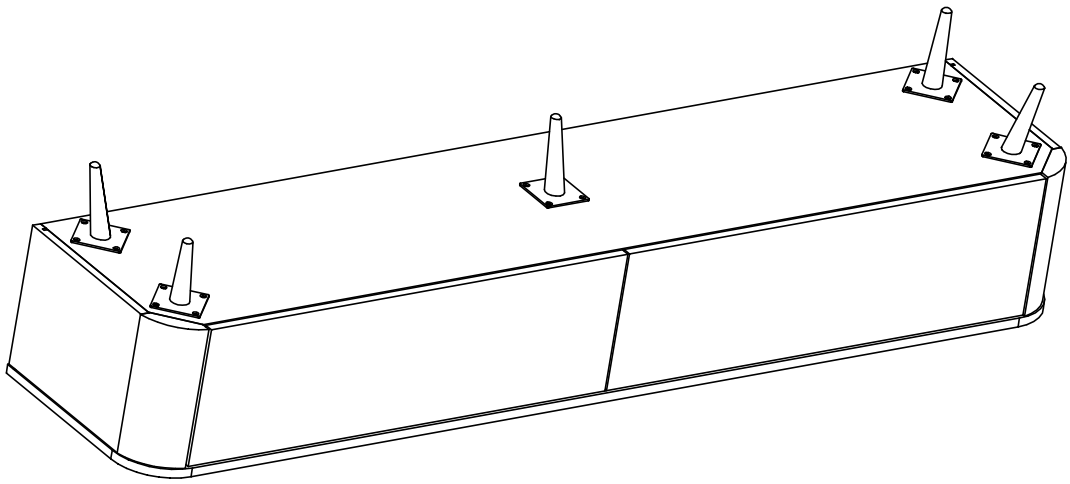

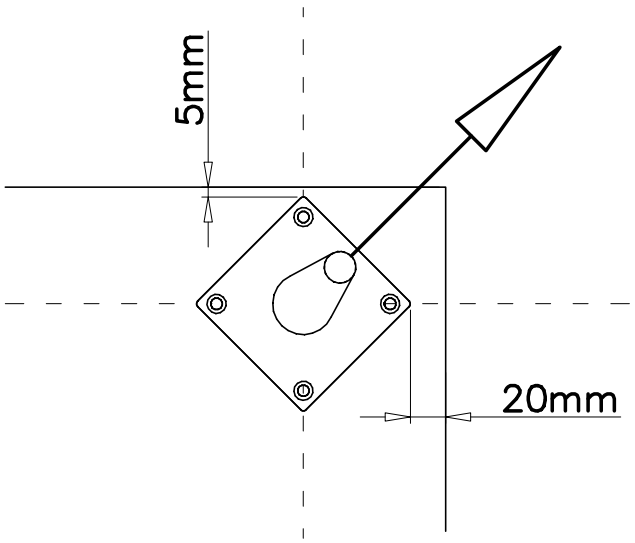

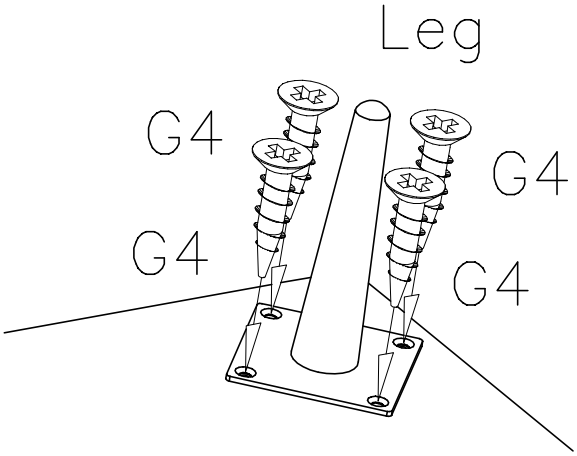

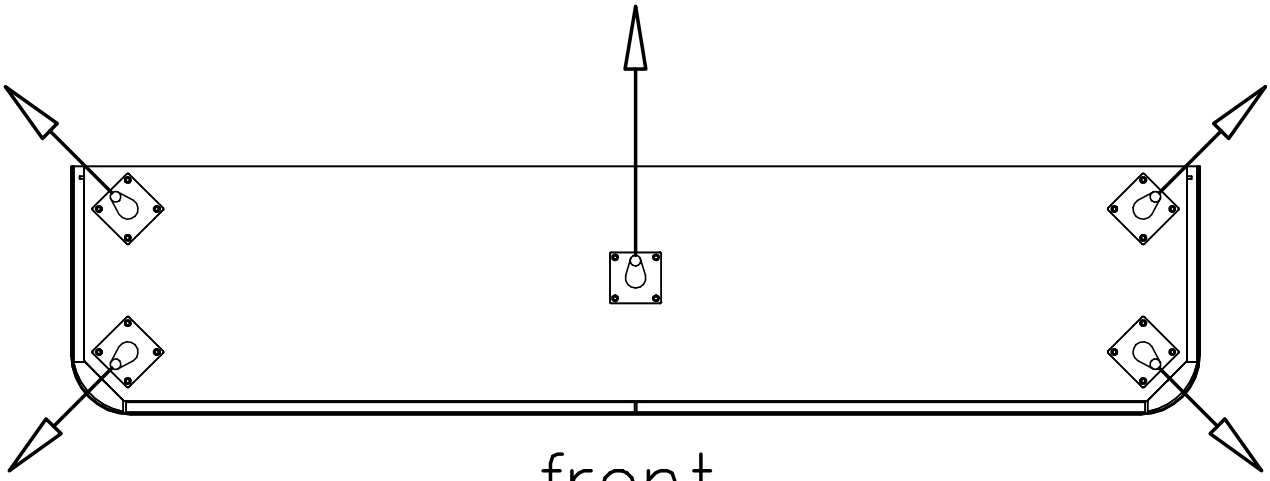

front

SAGE – RTV

XVI Ver. 1

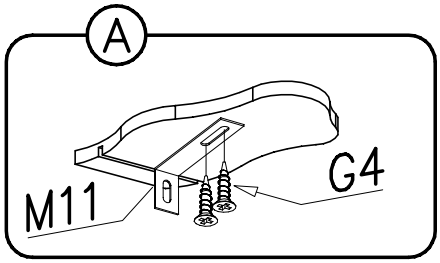

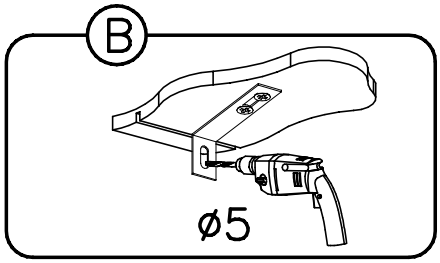

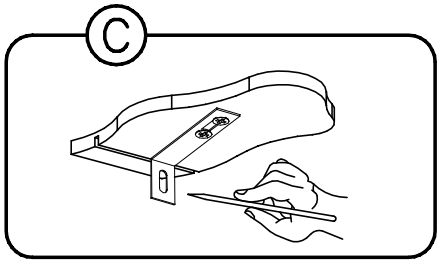

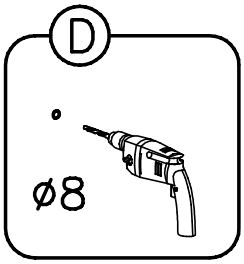

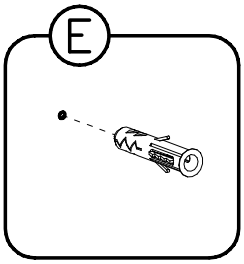

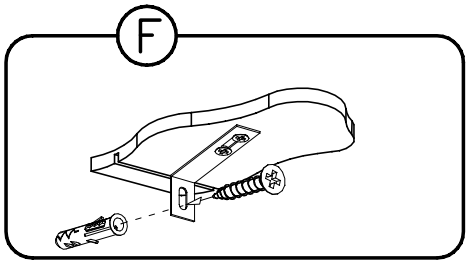

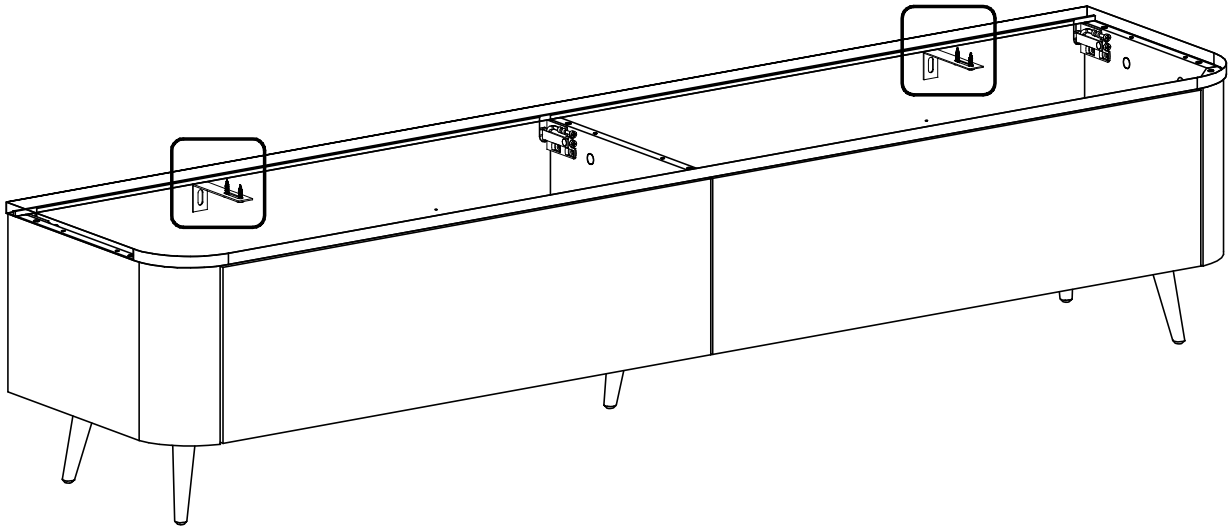

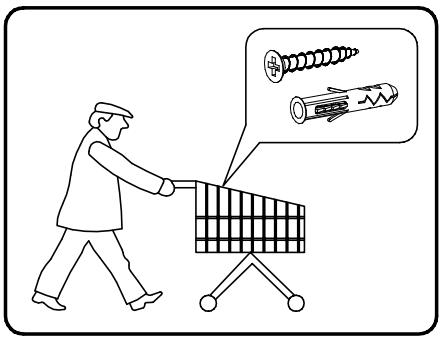

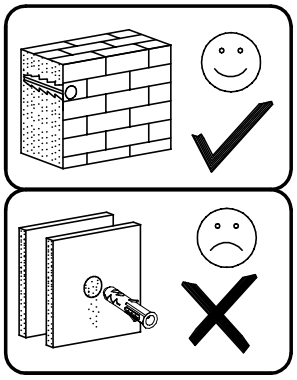

Uwaga • Upozornění • Achtung • Attention • Caution • Figyelem
Attenzione • Opgelet • Внимание • Atenţie • Upozornenie • Dikkat

