ASSEMBLY INSTRUCTIONS

Fine Furniture for every stage of life

(B1 - B3)
Twin/Twin Bunk Bed

REVISION 0 : 04/12/2018
REVISION 1 : 08/30/2018
REVISION 2 : 08/27/2020

ASSEMBLY INSTRUCTIONS

ASSEMBLY TIPS:

1. Remove hardware from box and sort by size.
2. Please check to see that all hardware and parts are present prior to start of assembly.
3. Please follow attached instructions in the same sequence as numbered to assure fast & easy assembly.

WARNING!

1. Don't attempt to repair or modify parts that are broken or defective. Please contact the store immediately.
2. This product is for home use only and not intended for commercial establishments.

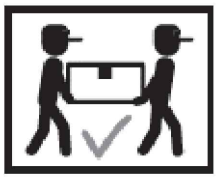

ASSEMBLY TIME | **30 MINUTES**

PARTS IDENTIFICATION

B1 (BOX 1)

A	RIGHT UPPER BED END	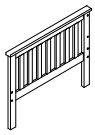	1PC
B	LEFT UPPER BED END	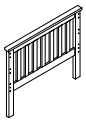	1PC
C	LOWER BED END	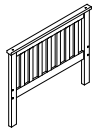	2PCS

B2 (BOX 2)

D	UPPER BED BACK BED RAIL (WITH 2 HOLES)		1PC
E	UPPER BED FRONT BED RAIL (WITH 3 HOLES)		1PC
F	LOWER BED FRONT BED RAIL (WITH 2 HOLES		1PC
G	LOWER BED BACK BED RAIL		1PC
H	BACK GUARDRAIL		2PCS
I	FRONT GUARDRAIL		2PCS
JF	LEFT LADDER STILE		1PC
KF	RIGHT LADDER STILE		1PC
LF	LADDER STEP		3PCS
M	FLAT GUARDRAIL SUPPORT	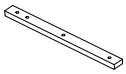	3PCS

B3 (BOX 3)

N	ROLL SLAT (14PCS)	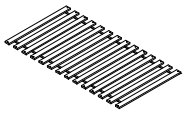	2SETS

NOTE:

Phillips head screw driver is required in the assembly process; however, manufacturer does not provide this item.

ASSEMBLY INSTRUCTIONS

ASSEMBLY TIPS:

1. Remove hardware from box and sort by size.
2. Please check to see that all hardware and parts are present prior to start of assembly.
3. Please follow attached instructions in the same sequence as numbered to assure fast & easy assembly.

WARNING!

1. Don't attempt to repair or modify parts that are broken or defective. Please contact the store immediately.
2. This product is for home use only and not intended for commercial establishments.

HARDWARE IDENTIFICATION

B2 (BOX2) - HARDWARE PACK IS LOCATED IN (B2)

1	**LONG BOLT** (1/4 x 70 x13mm - RBW)		22PCS
2	**BARREL NUT** (1/4 x 13mm - RBW)		22PCS
3	**WOOD DOWEL** (10 x 40mm)		14PCS
4	**SHORT BOLT** (1/4 x 35 x 13mm - RBW)		24PCS
5	**FLAT HEAD SCREW** (4 x 35mm - RBW)	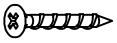	16PCS
6	**METAL DOWEL** (12 x 125mm - RBW)	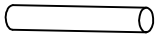	4PCS
7	**ALLEN WRENCH** (M4 - RBW)		1PC

NOTE:

Phillips head screw driver is required in the assembly process; however, manufacturer does not provide this item.

ASSEMBLY INSTRUCTIONS

STEP 1

LOWER BED END

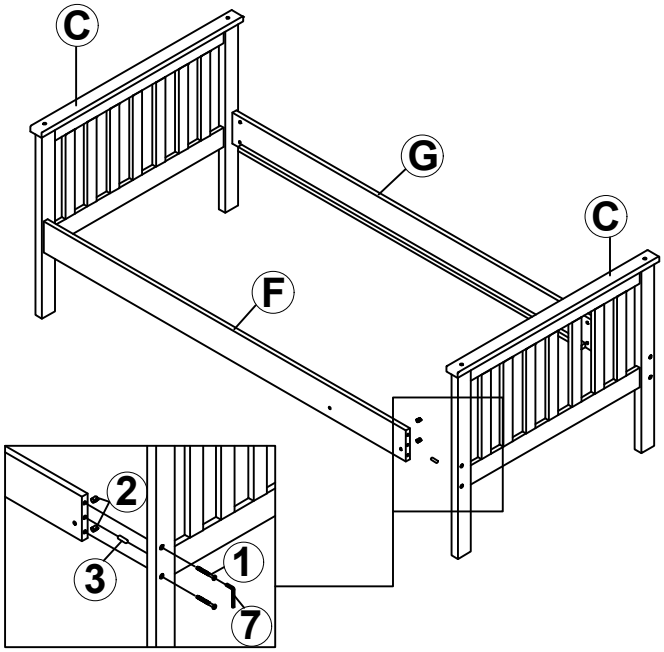

STEP 2

UPPER BED END

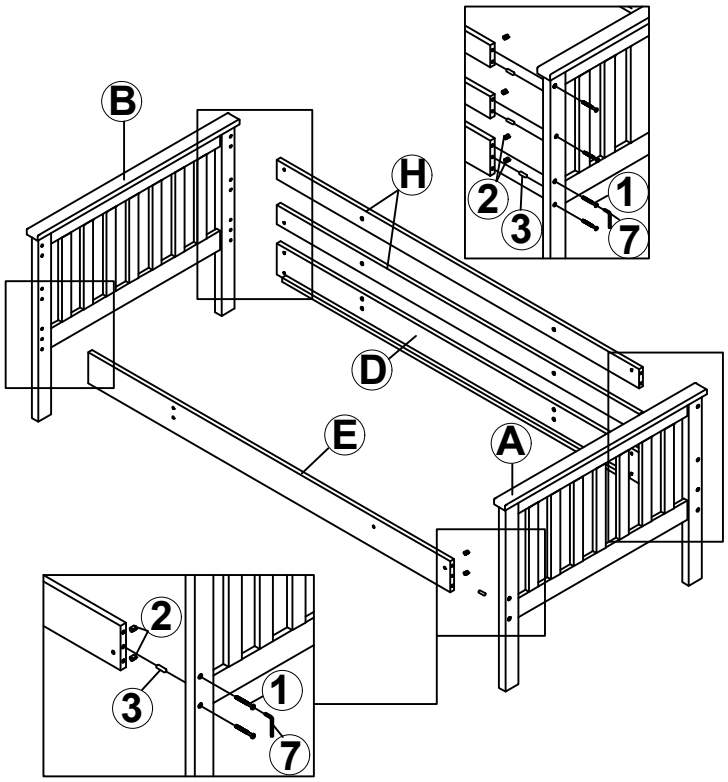

STEP 3

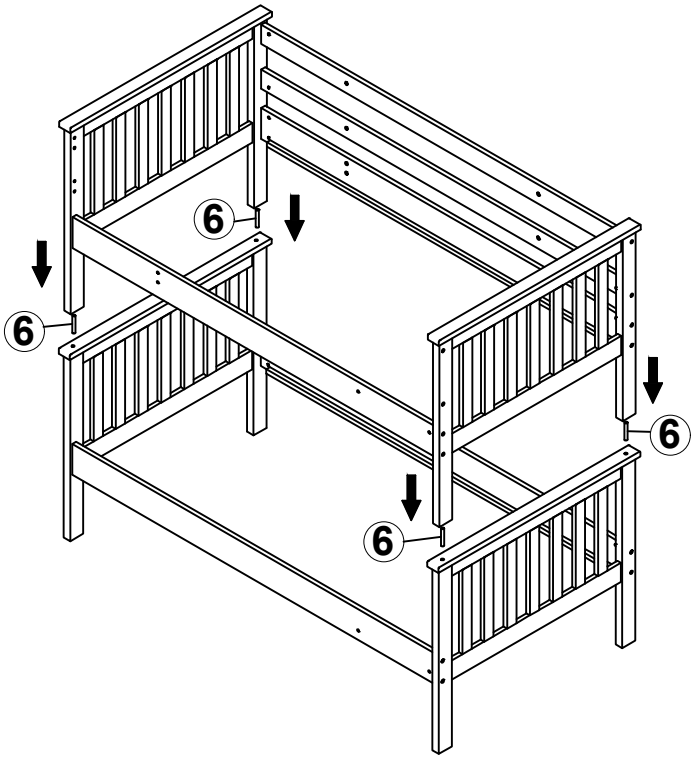

STEP 4

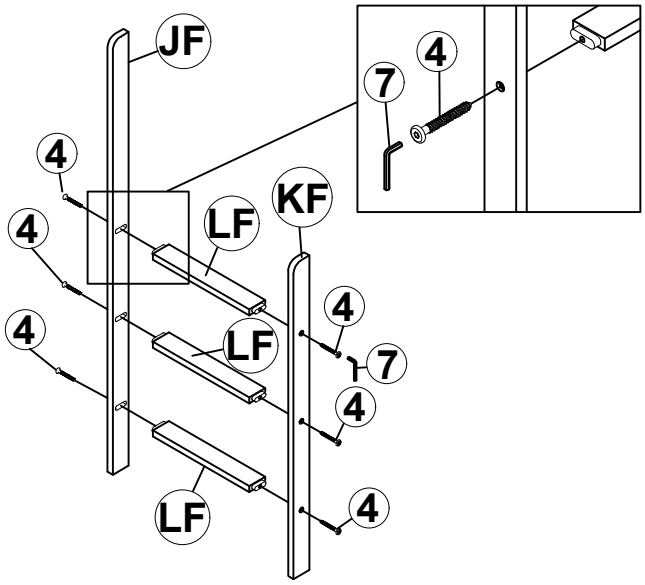

ASSEMBLY INSTRUCTIONS

STEP 5

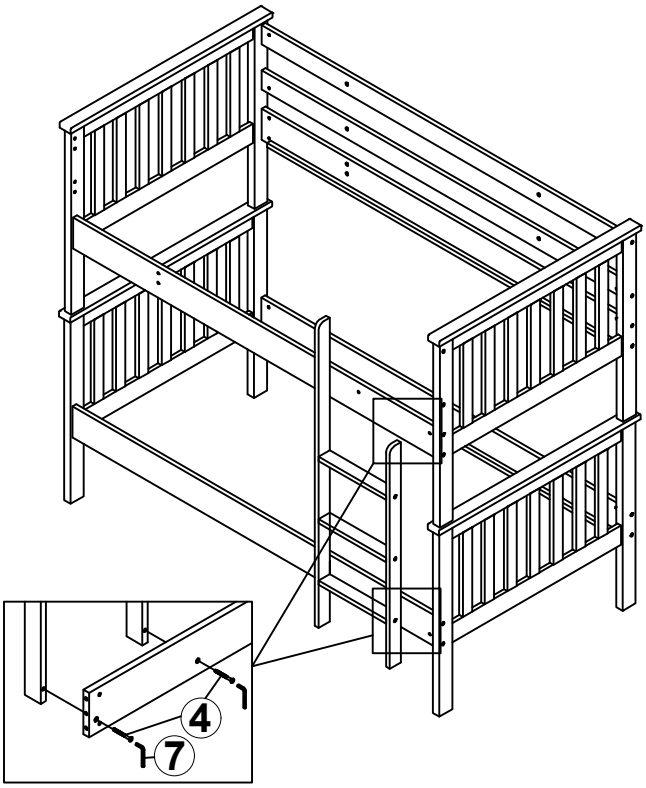

STEP 6

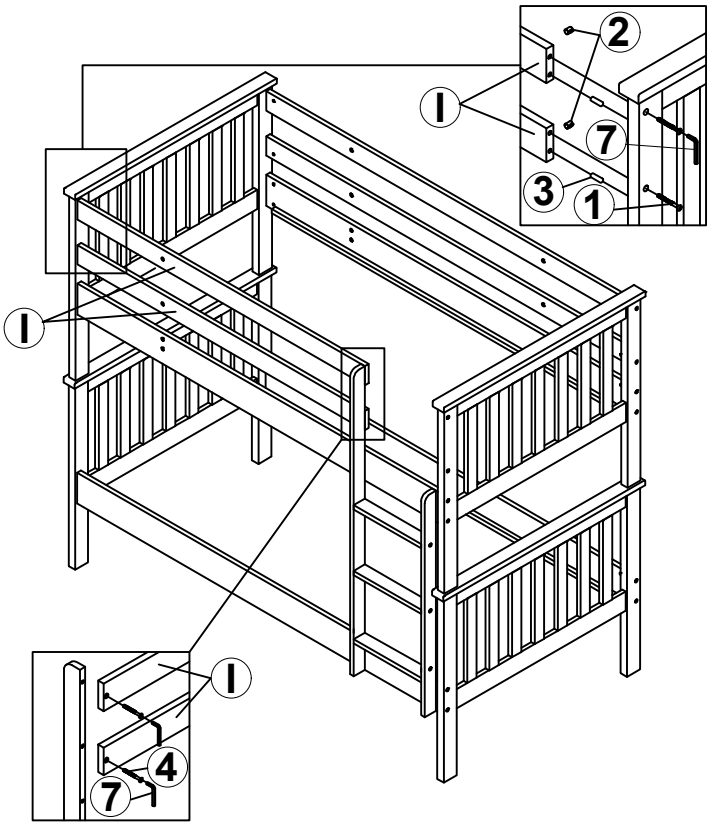

STEP 7

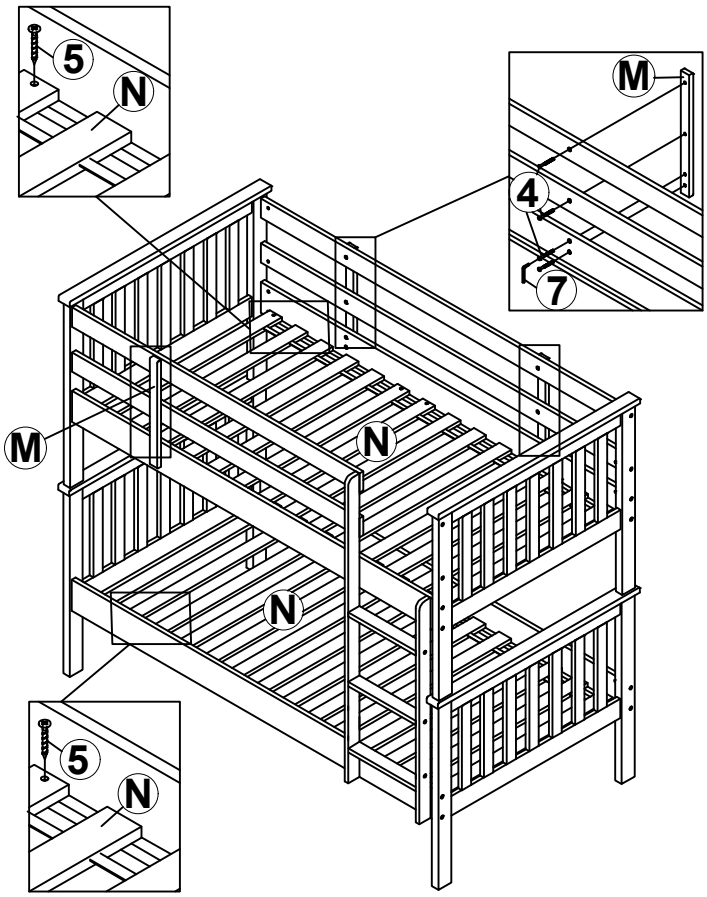

STEP 8
COMPLETE

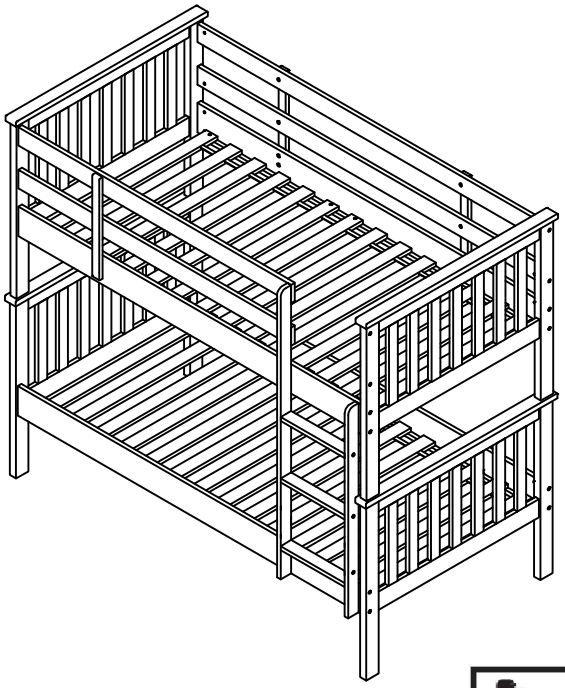

ASSEMBLY INSTRUCTIONS

SIZE OF MATTRESS

The length and width of the bunk mattress are as follow:

	Length	Width	Thickness
Upper bunk	***74" -75"***	***37 1/2"- 38 1/2"***	***6" Maximum***
Lower Bunk	***74" -75"***	***37 1/2"- 38 1/2"***	***6" Maximum***

Ensure thickness of mattress does not exceed 6" and there must be at least 5" from mattress sleeping surface to top edge of guardrail.

SAFETY WARNING

1. Follow the information on the warnings appearing on the upper bunk end structure and on the carton. Do not remove the warning label from bed.
2. Always use the recommended size mattress or mattress support or both to help prevent the likelihood of entrapment or falls.
3. Surface of mattress must be at least 5 in. (127 mm) below the upper edge of guardrails.
4. Do not allow children under 6 years of age to use the upper bunk.
5. Prohibit more than one person on upper bunk.
6. Periodically check and ensure that the guardrail, ladder, and other components are in their proper position, free from damage, and that all connectors are tight.
7. Do not allow horseplay on or under the bed and prohibit jumping on the bed.
8. Always use the ladder for entering and leaving the upper bunk.
9. Do not use substitute parts. Contact the manufacturer or dealer for replacement parts.
10. Use of a night light may provide added safety precaution for a child using upper bunk.
11. Always use guardrails on both long sides of the upper bunk. If the bunk bed will be placed next to the wall, the guardrail that runs the full length of the bed should be placed against the wall to prevent entrapment between the bed and wall.
12. The use of water or sleep flotation mattress is prohibited.
13. Keep these instructions for future reference.

STRANGULATION HAZARD:

14. Never attach or hang items to any part of the bunk bed that are not designed for use with the bed for example, but not limited to hooks, belts, and jump ropes.

ASSEMBLY INSTRUCTIONS

⚠ WARNING ⚠

TO PREVENT SERIOUS OR FATAL INJURY

1. When using beds as bunk beds, the ladder MUST be securely attached to the upper bunk rail at all times.

2. When using the beds as two (2) separate floor-standing beds, the ladder MUST be stored in a separate location where children cannot use the ladder in any manner.

3. DO NOT use, nor permit children to use, the ladder in any manner whatsoever, other than to access the top unit when used as bunk beds, and only if the ladder is securely attached to the top bunk rail, as set forth in the instructions.

4. Any misuse or unauthorized use of the ladder could result in serious or fatal injury.

5 Failure to follow the above WARNING, and/or failure to follow assembly instructions completely, will void any and all liability of our company fordamages and injury to persons and property.

Inner Size: 76.50"W x 39.25"D

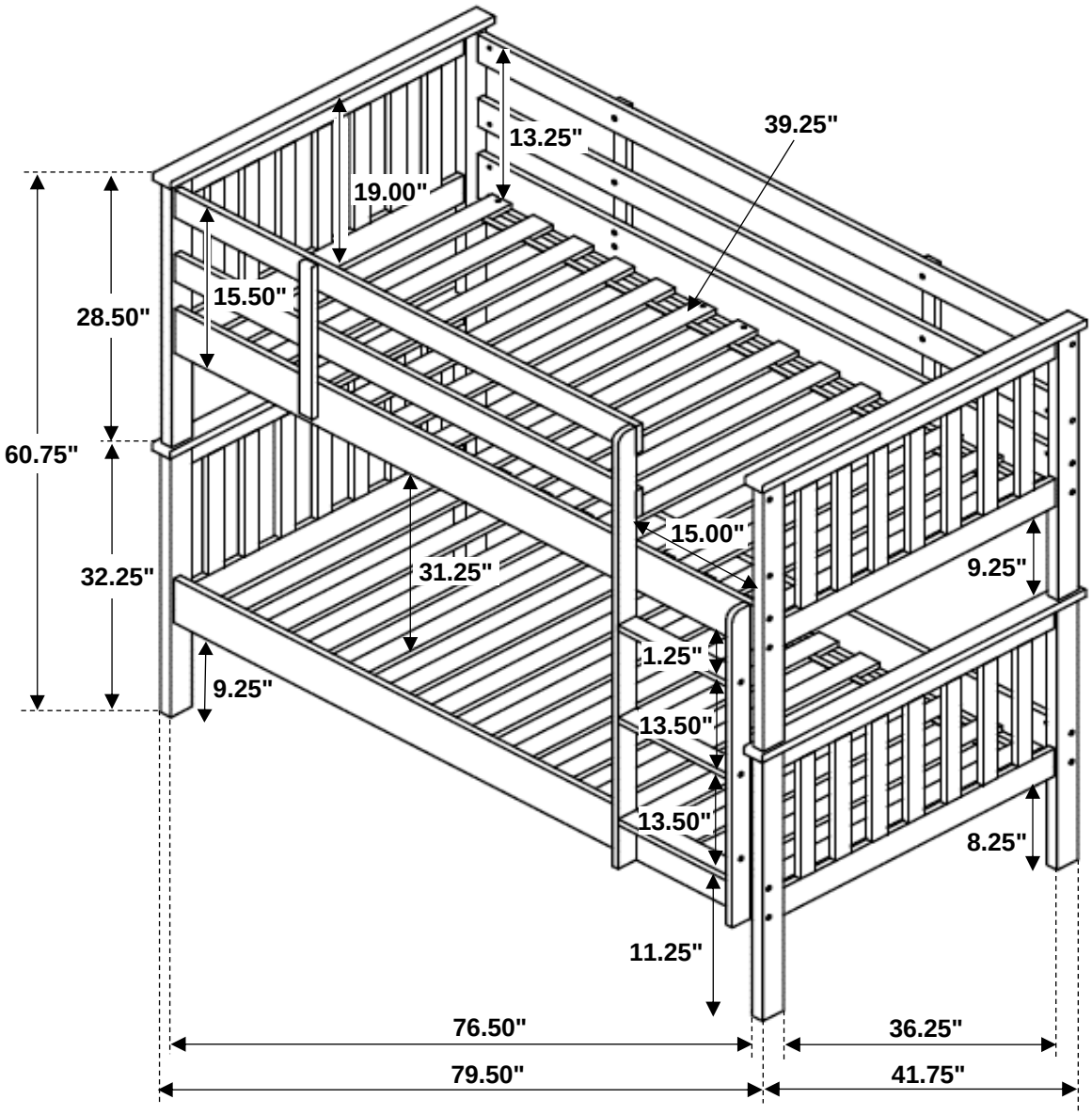

Note: Dimension tolerance ±5%