ASSEMBLY INSTRUCTION

CS.CAM–2306

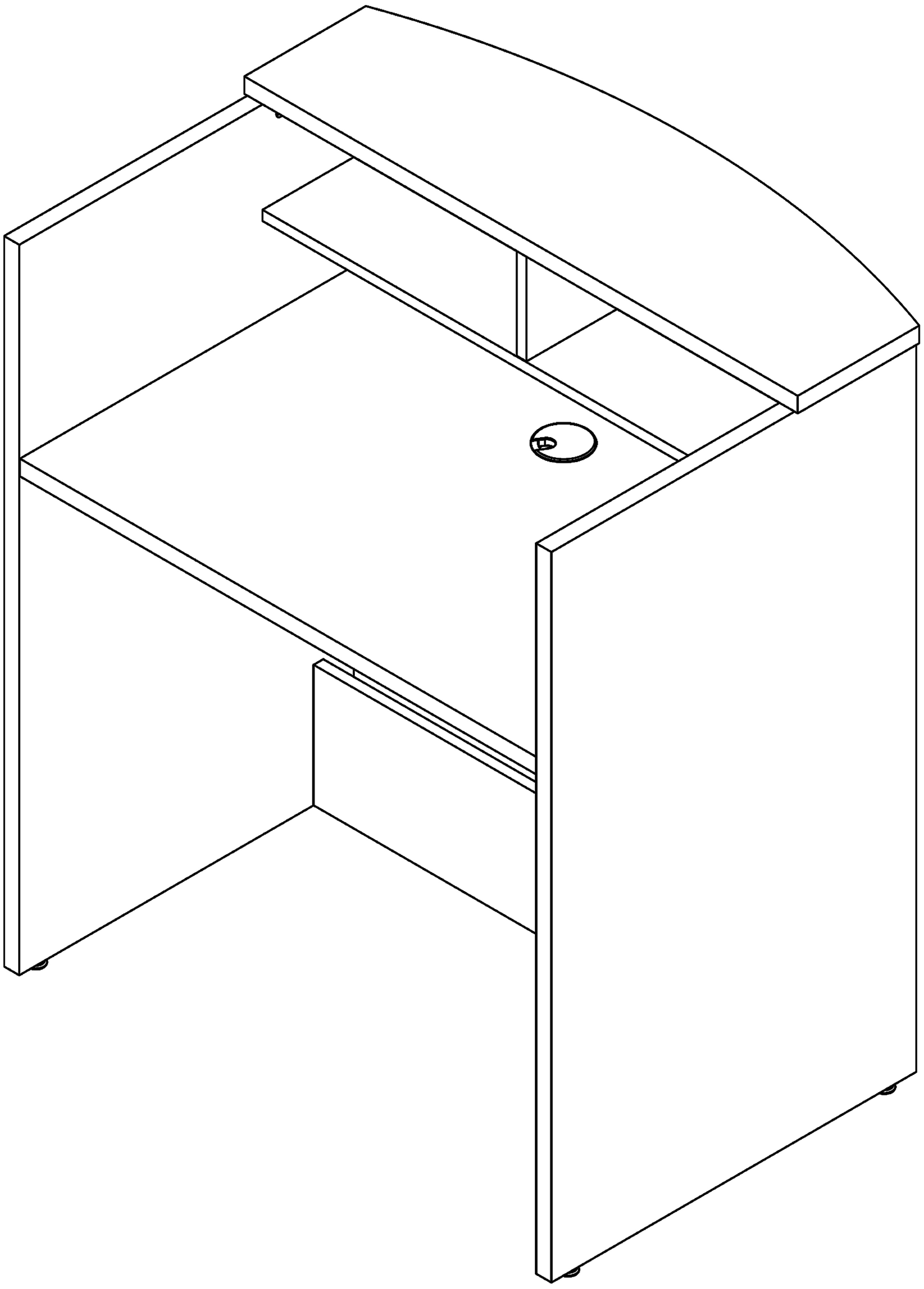

Dear Customer,

Thank you for choosing us. Before you begin assembly, check that you have all the parts and hardware shown on this page.

If there is any item missing,please circle the item, indicating quantity required and send picture to us. We will arrange replacement at first time.

If feel question in assemble, Please feel free to ask us.

Customer satisfaction is our prime.

Your order means a lot to us!

Thank you

TOOLS NEEDED

Crosshead screwdriver

Flat–head screwdriver

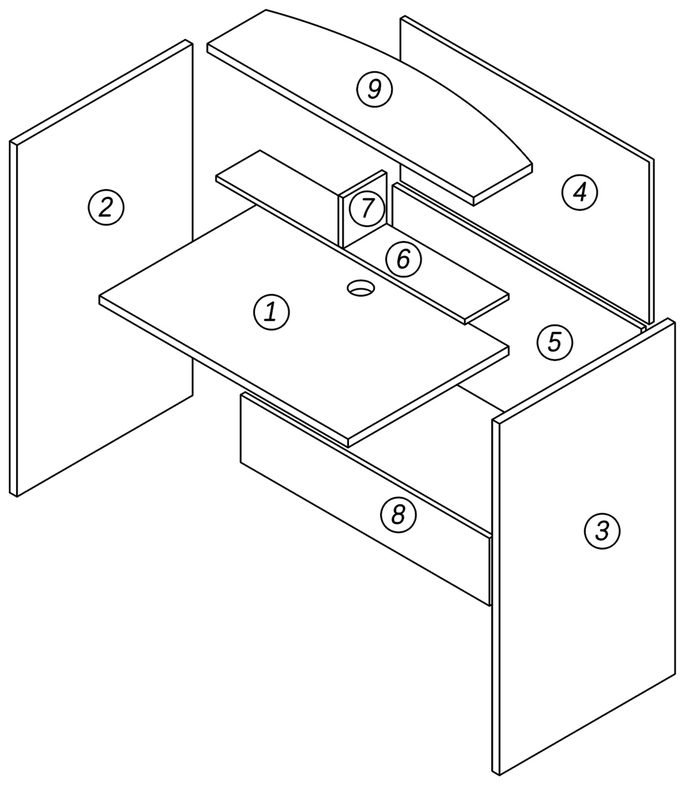

HARDWARE

A:Cam Lock
Φ15mm

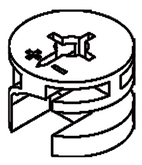

45 pcs

B:Cam Bolt
M6

39 pcs

C:Wooden Dowel
Φ8*30mm

32 pcs

D:Glider
M8*25mm

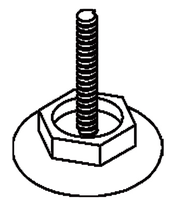

4 pcs

E:Cam bolt (48)
Φ6*48mm

3 pcs

F:Plug (low)
Φ15mm

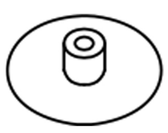

34 pcs

H:Plug (deep)
Φ15mm

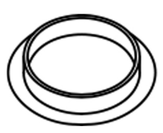

11 pcs

I:Grommet
Φ64mm

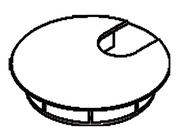

1 pcs

STEP 1a

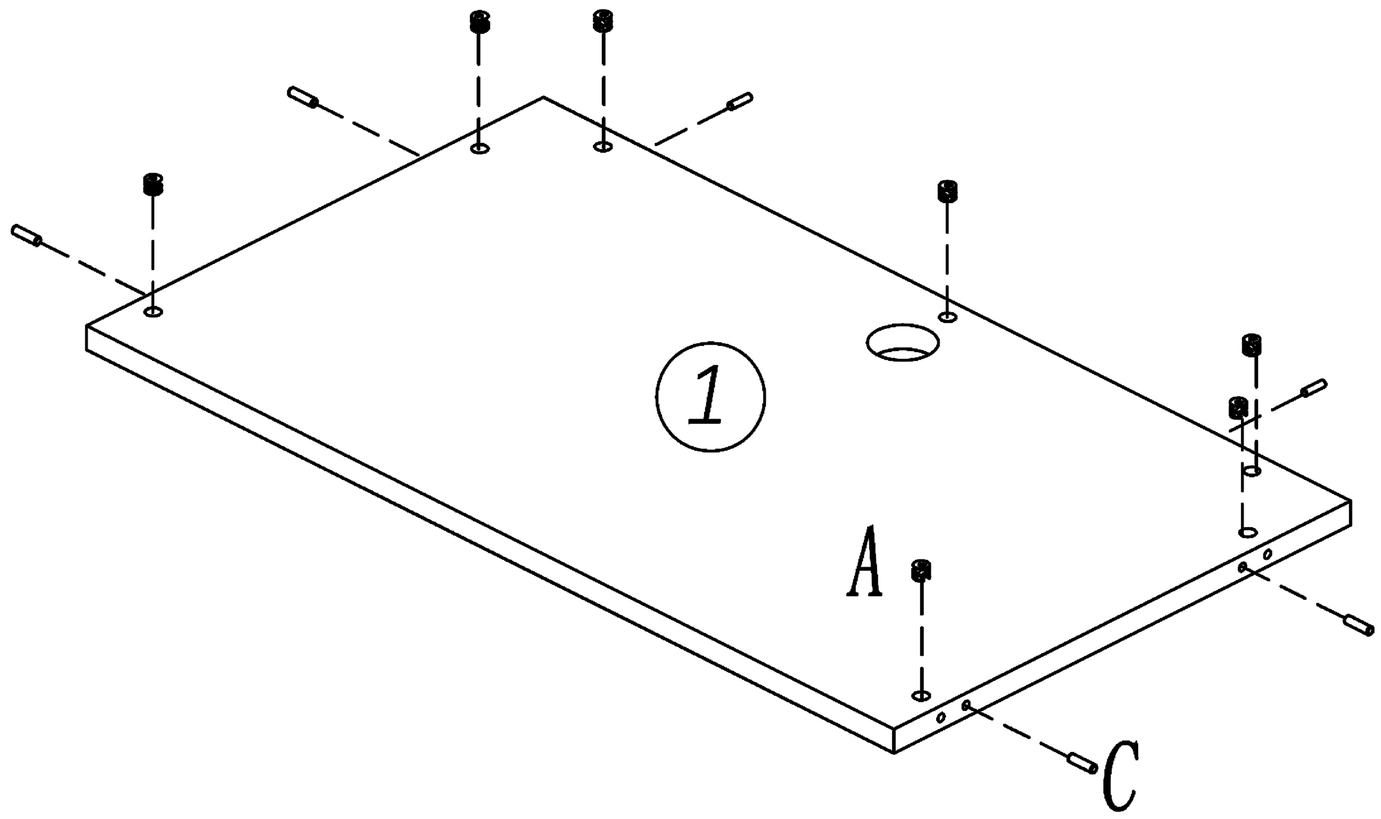

A 7 pcs

C 6 pcs

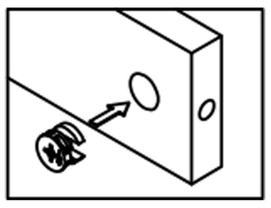

Direction of arrow to the side hole.

STEP 1b

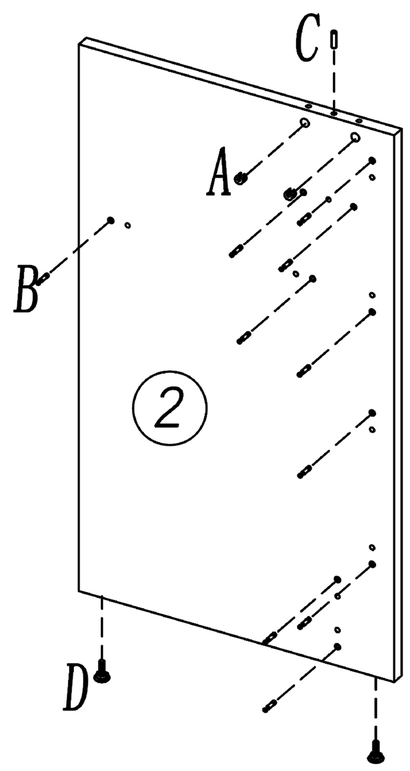

A 2 pcs

B 10 pcs

C 1 pcs

D 2 pcs

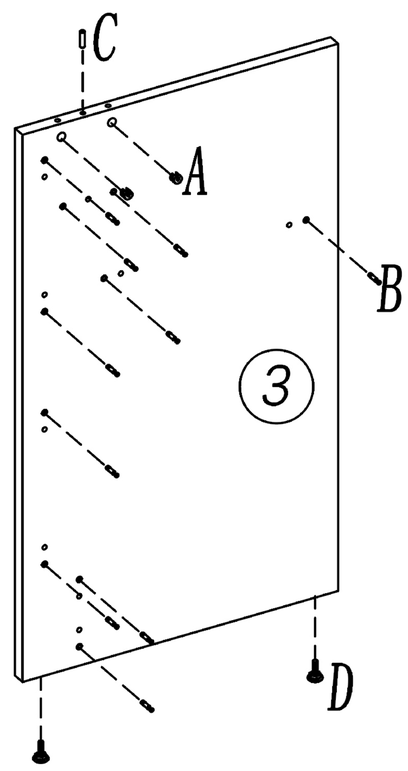

A 2 pcs

B 10 pcs

C 1 pcs

D 2 pcs

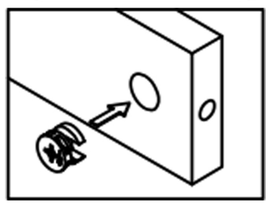

Direction of arrow to the side hole.

STEP 1c

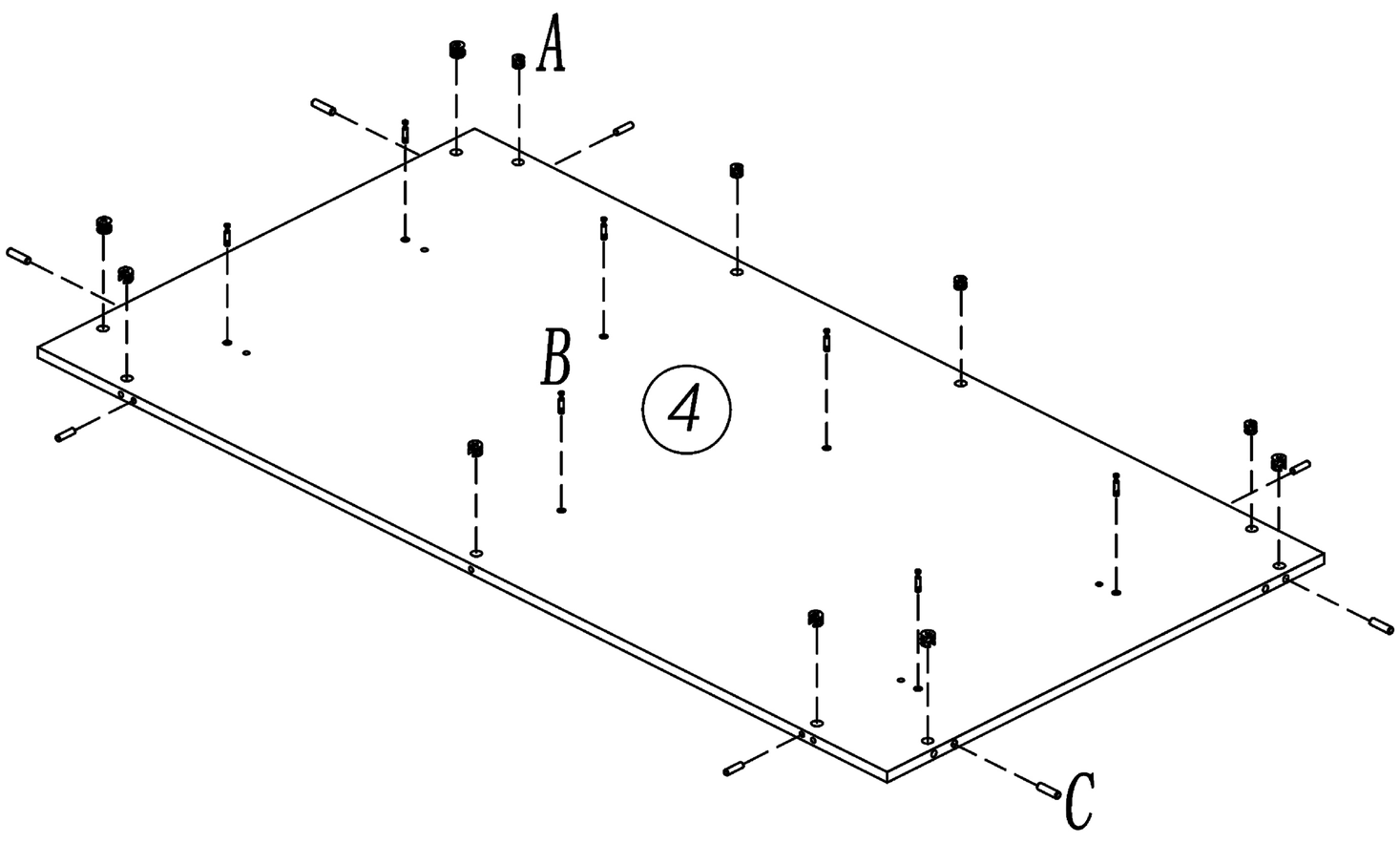

A 11 pcs

B 7 pcs

C 8 pcs

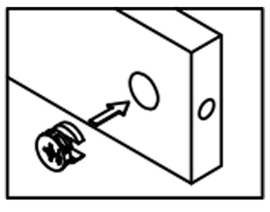

Direction of arrow to the side hole.

STEP 1d

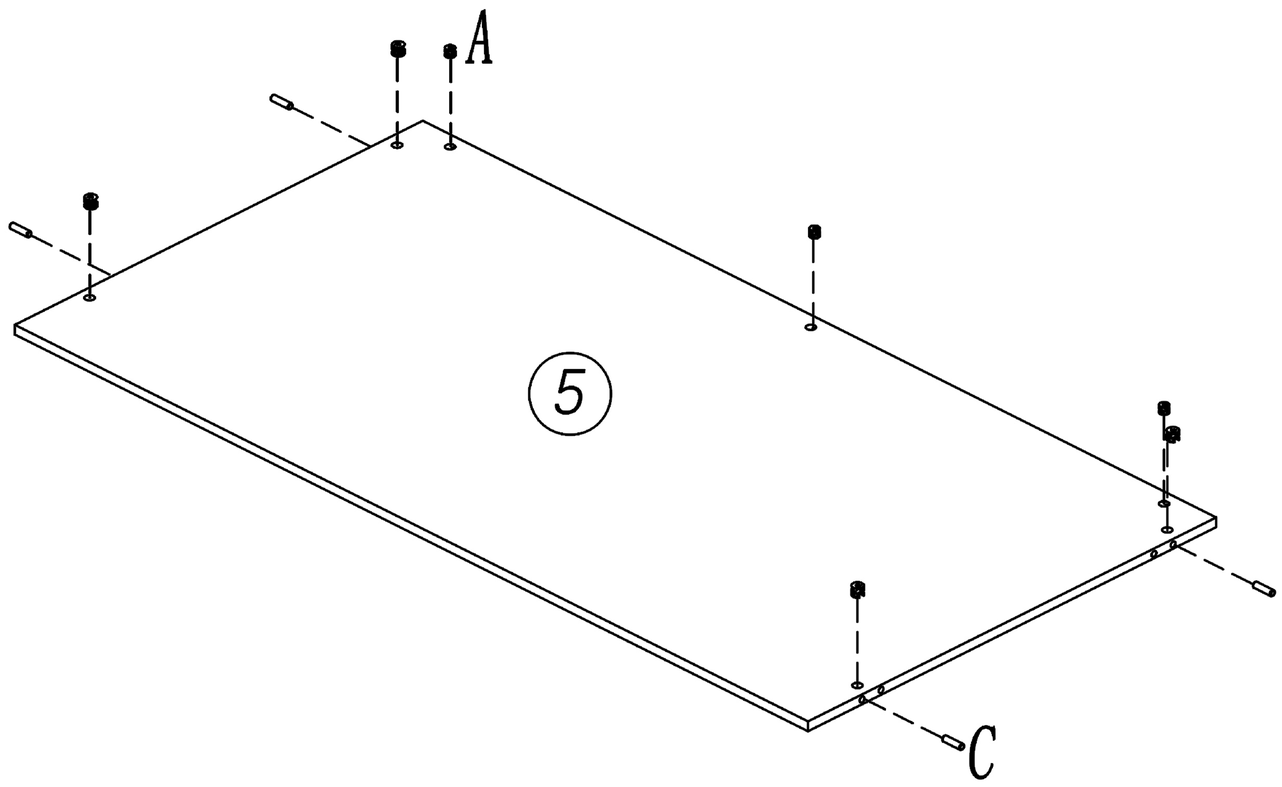

A 7 pcs

C 4 pcs

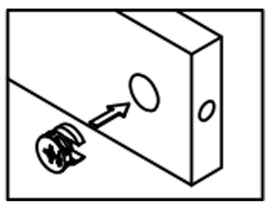

Direction of arrow to the side hole.

STEP 1e

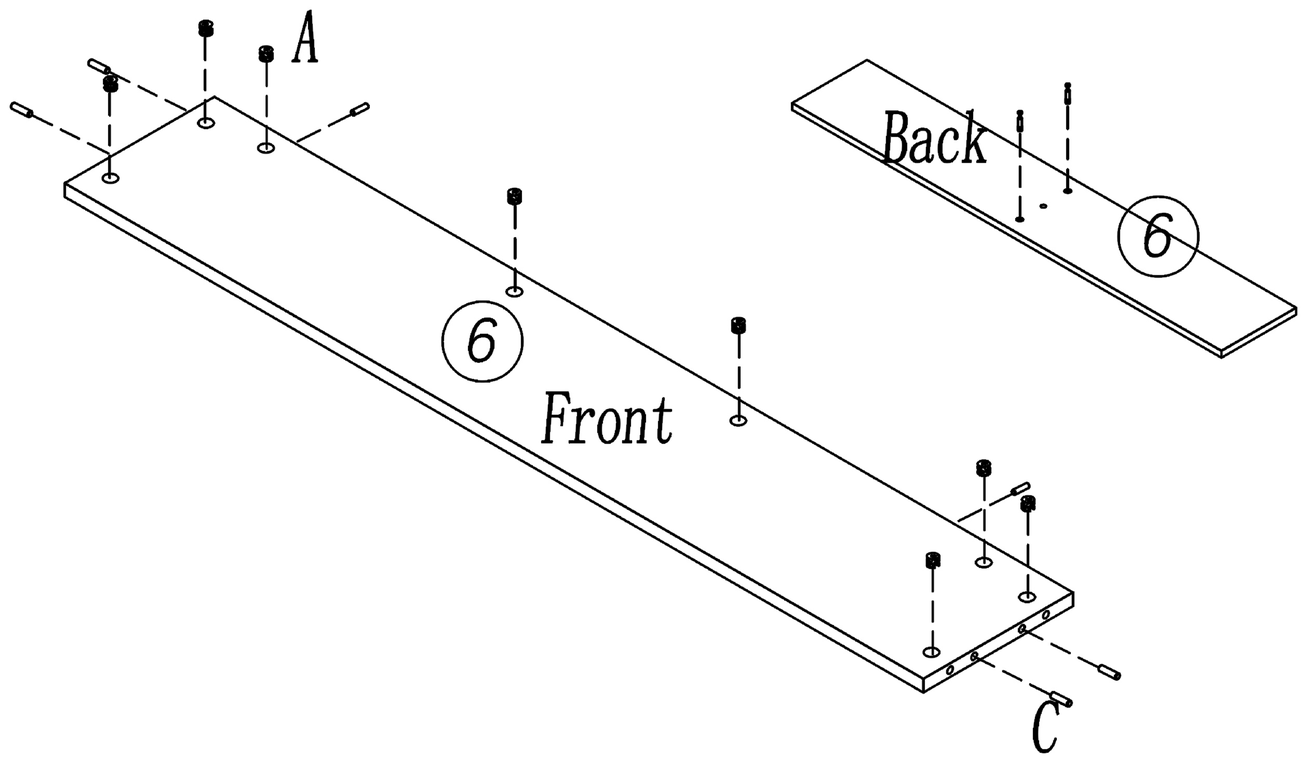

A 8 pcs

B 2 pcs

C 6 pcs

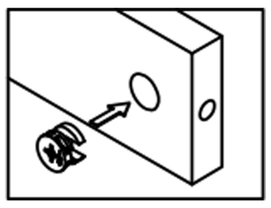

Direction of arrow to the side hole.

STEP 1f

A 4 pcs

C 2 pcs

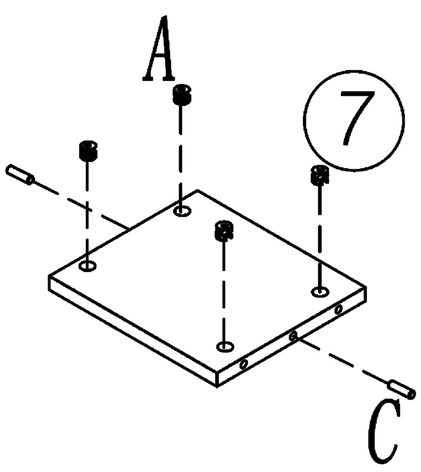

A 4 pcs

C 4 pcs

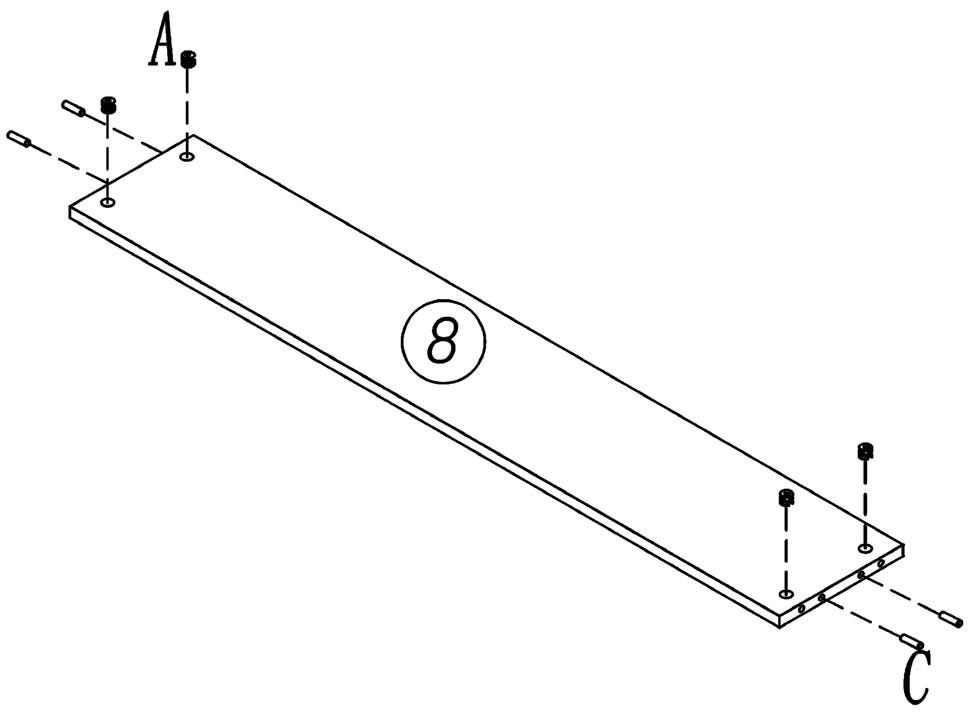

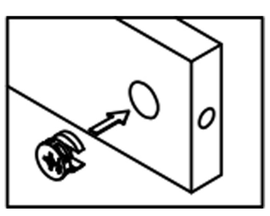

Direction of arrow to the side hole.

STEP 1g

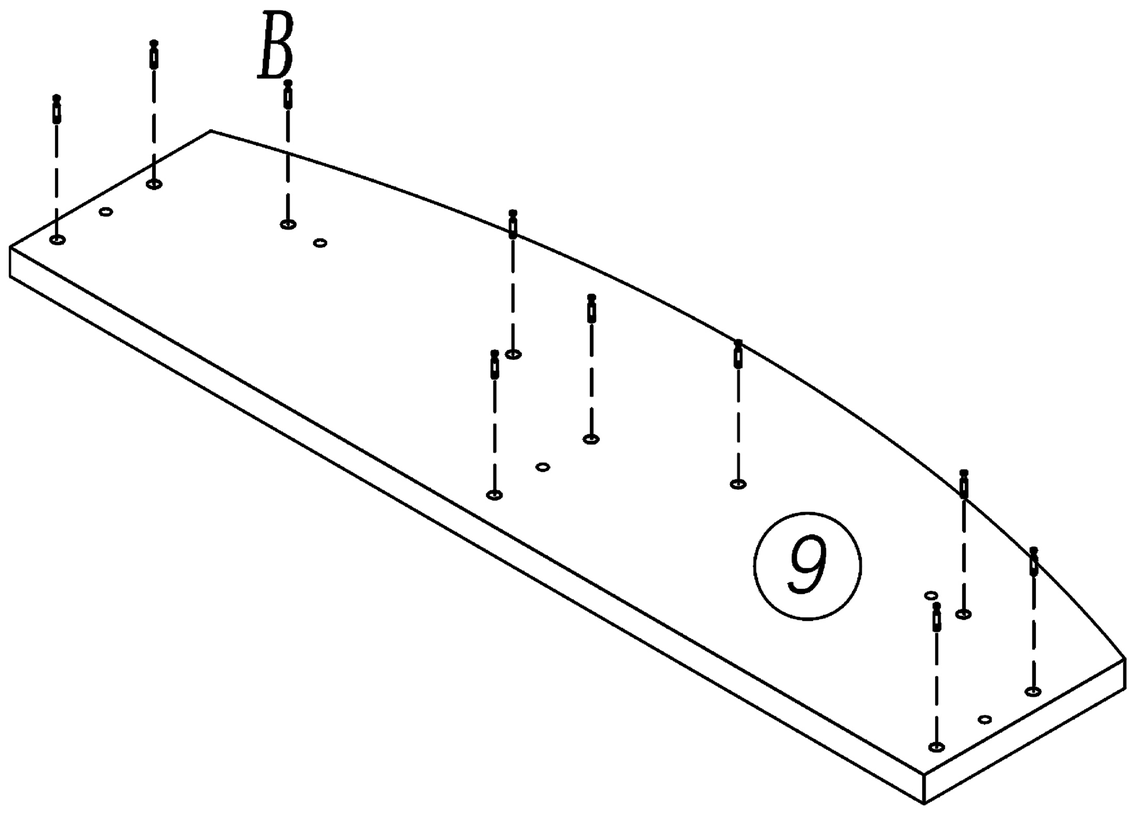

B 10 pcs

STEP 2

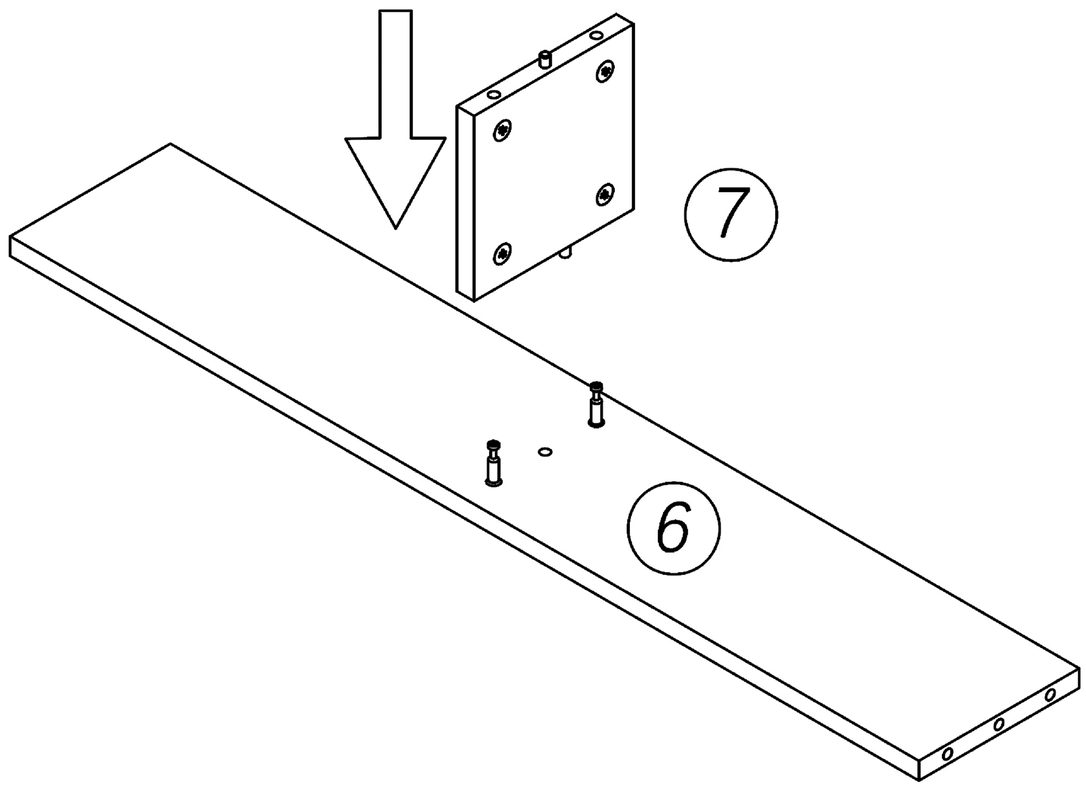

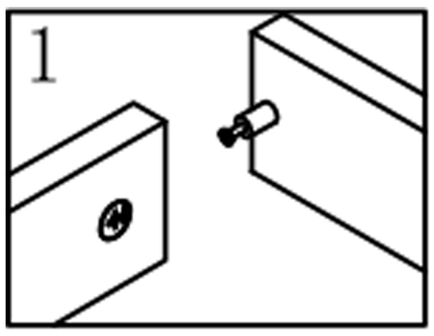

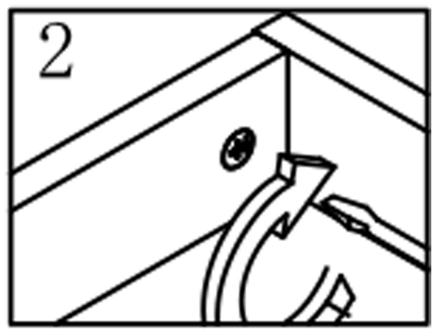

- Align the Cam bolt(in 6) with corresponding holes (in 7).
- Fasten the Cam Locks clockwise.

STEP 3

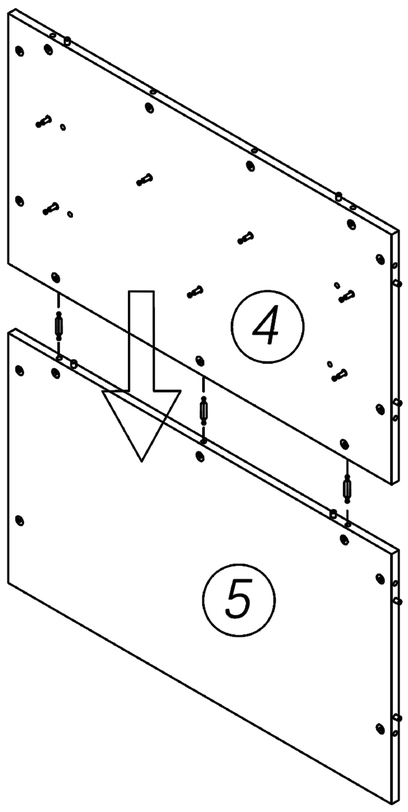

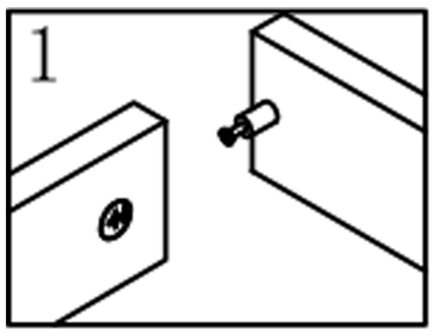

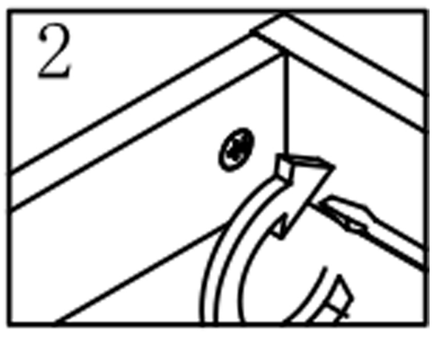

- Align the Cam bolt with corresponding holes (in 4 and 5).
- Fasten the Cam Locks clockwise.

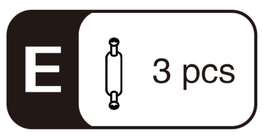

STEP 4

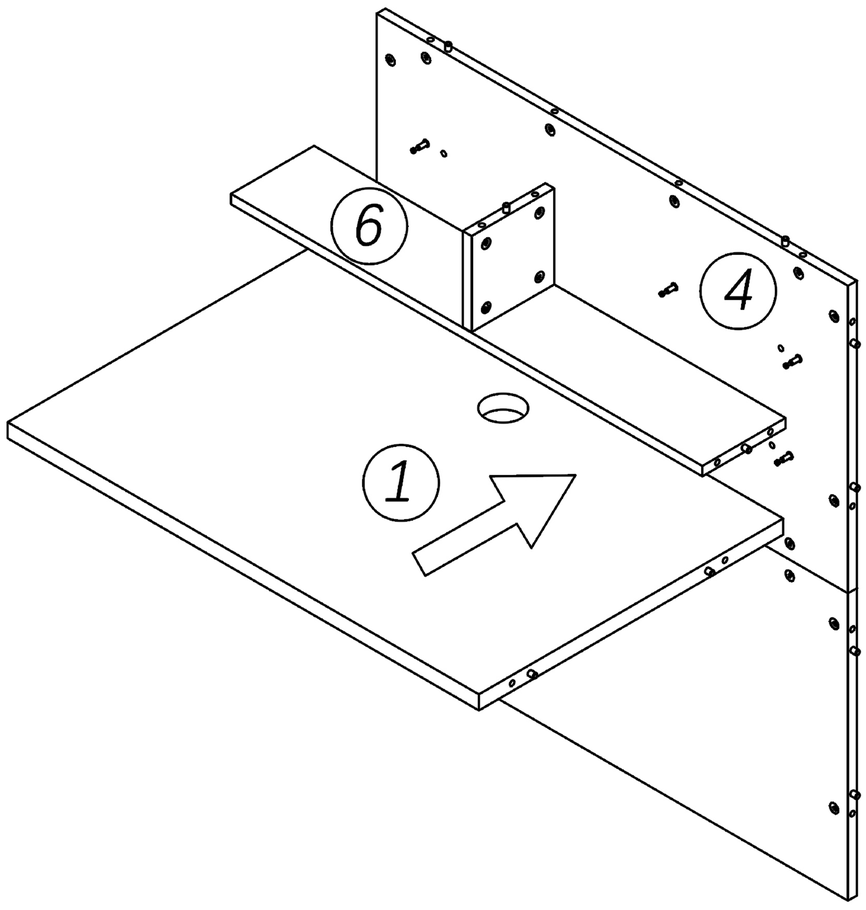

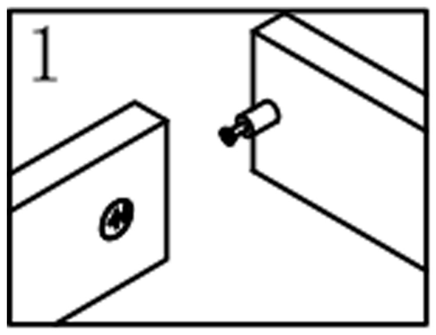

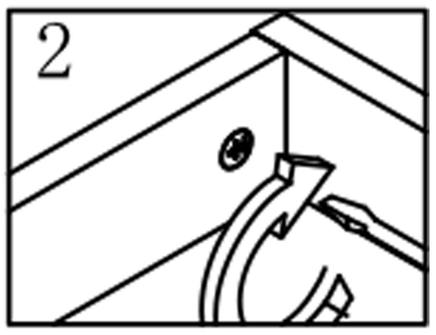

- Align the Cam bolt (in 4) with corresponding holes (in 1 and 6).
- Fasten the Cam Locks clockwise.

STEP 5

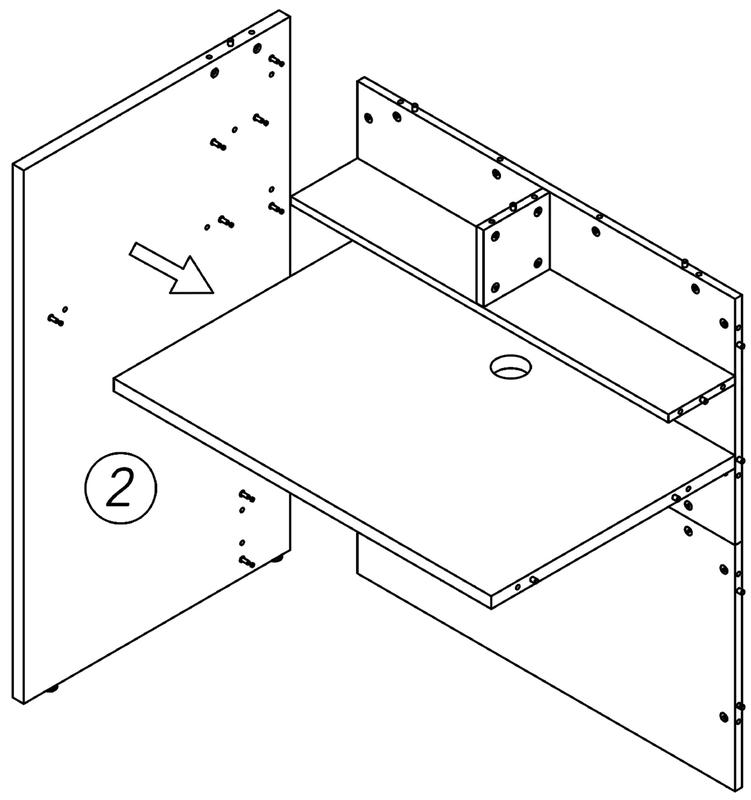

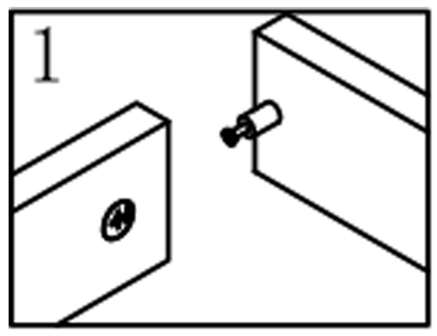

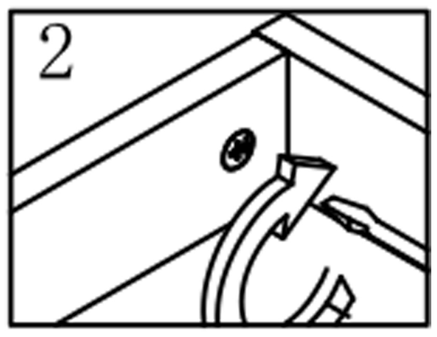

- Align the Cam bolt (in 2) with corresponding holes in installed parts.
- Fasten the Cam Locks clockwise.

STEP 6

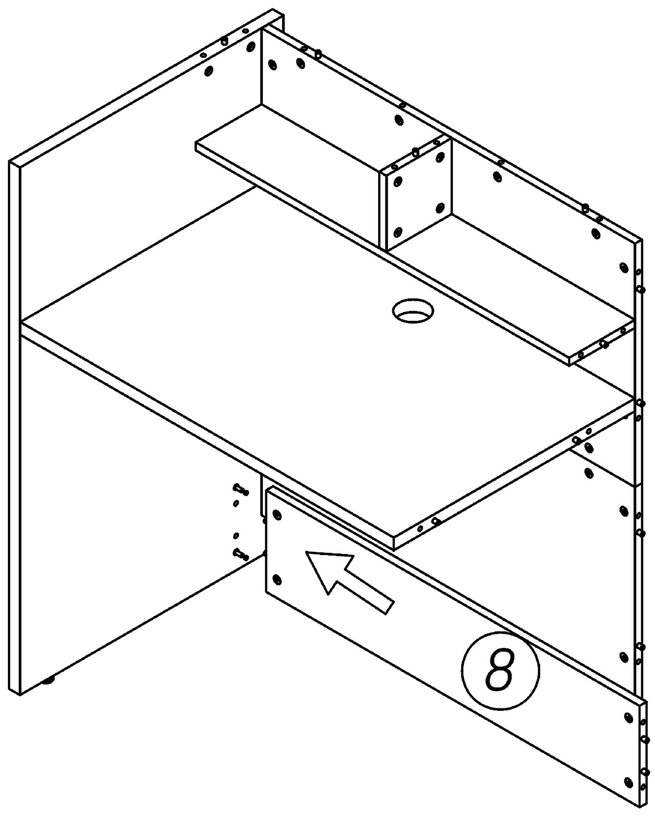

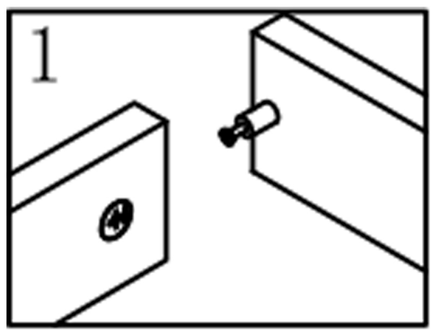

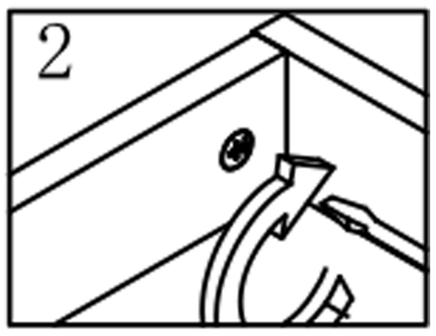

- Install board 8.
- Fasten the Cam Locks clockwise.

STEP 7

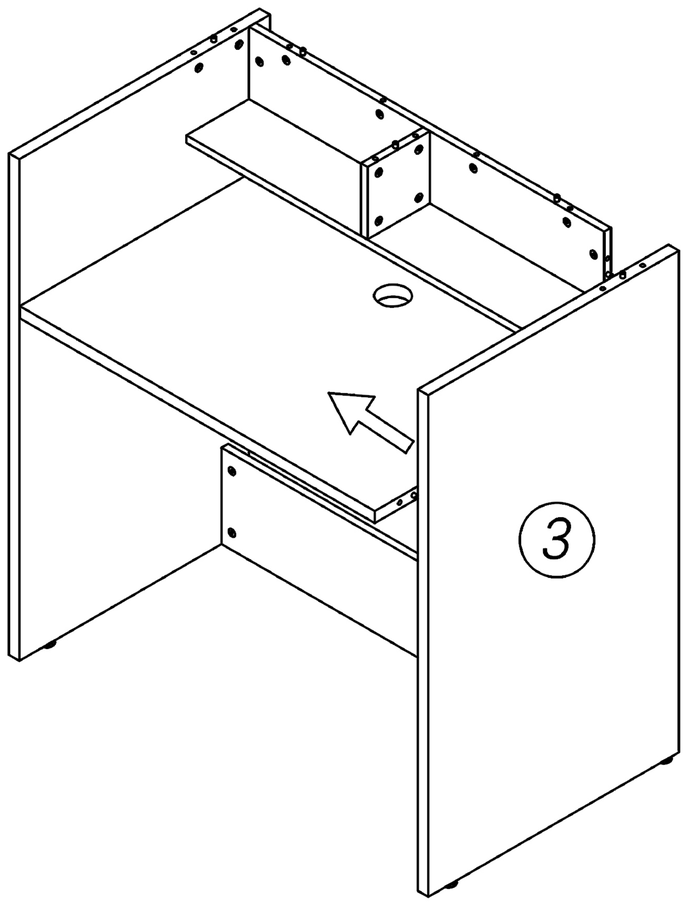

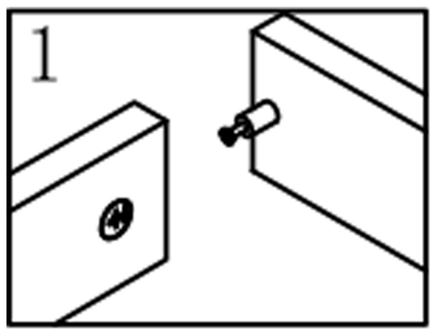

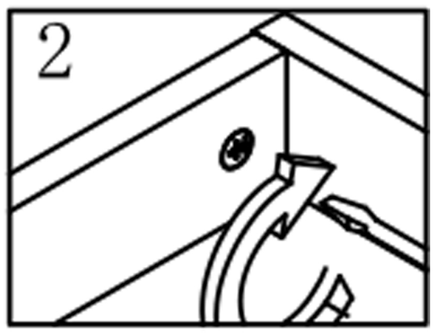

- Align the Cam bolt(in 3) with corresponding holes in installed parts.
- Fasten the Cam Locks clockwise.

STEP 8

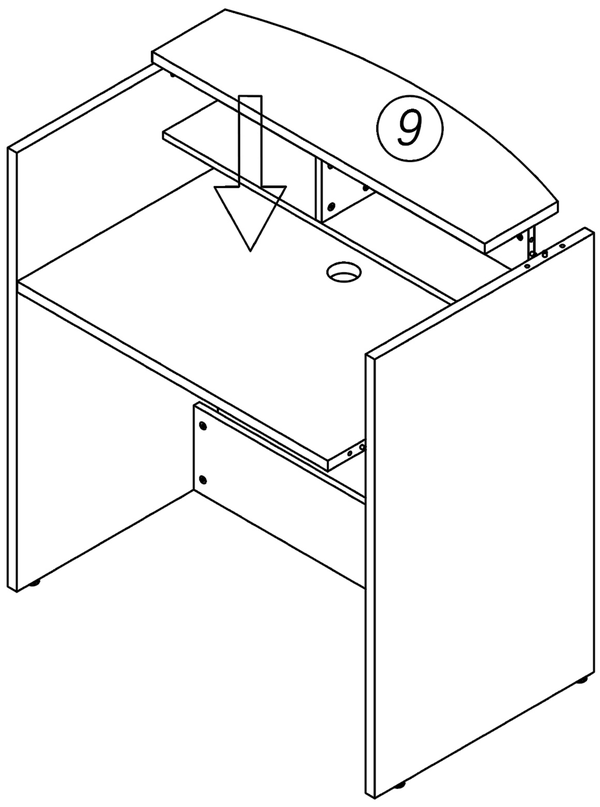

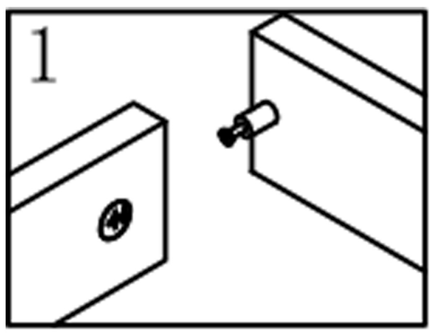

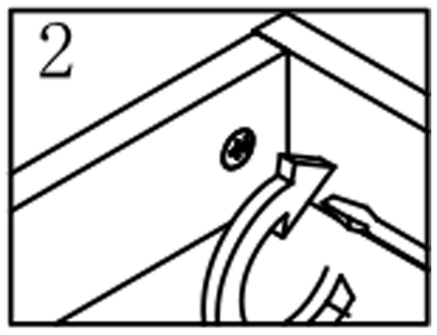

- Install board 9.
- Fasten the Cam Locks clockwise.

STEP 9

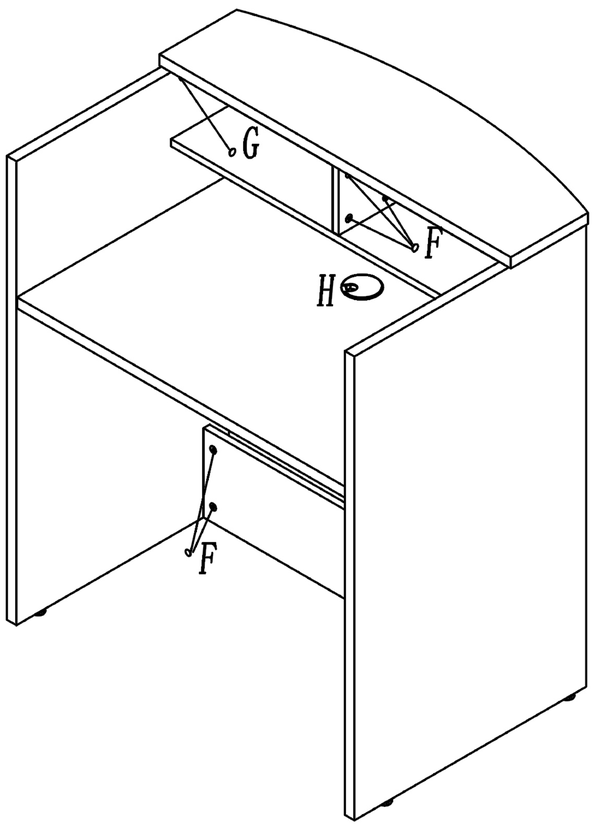

F 34 pcs

G 11 pcs

H 1 pcs

- Install plugs and grommets.

Thank you for your recent order.

We strive to provide customers with great services and satisfaction.

If any questions, please contact us.

Our customer support team is ready to help!