Care and Maintenance

Blot up spills immediately, use coasters on table tops under beverages. Use trivets or mats under hot dishes or cookware. Clean with warm water and dry surface immediately after cleaning. Do not use cleaners that contain acid such as bathroom cleaners, grout cleaner, and tile cleaners. Do not use abrasive cleaners in either dry or liquid forms. Use a cleaner and polish formulated for marble surfaces.

Notice

* Please make sure that you have all parts indicated before you begin assembly of this item
* This item should be assembled on a soft surface to prevent scratching the finish during assembly
*This item may require periodic tightening

Product Dimensions: 25"W x 14"D x 20"H

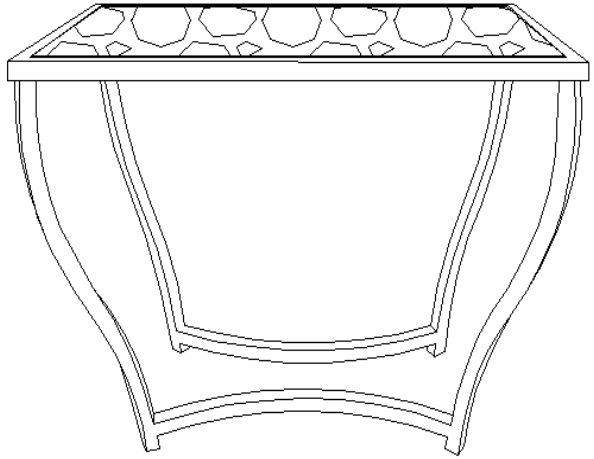

Part List and Hardware List

Piece	Description	Picture	Quantity
A	Frame		1X
B	Square Marble		1X
C	Screws		4X(M6x10mm)

Preparation

Before beginning assembly of product, make sure all parts are present. Compare parts with package contents list and hardware contents list.
If any part is missing or damaged, do not attempt to assemble the product.
Estimated Assembly Time: 10 minutes.

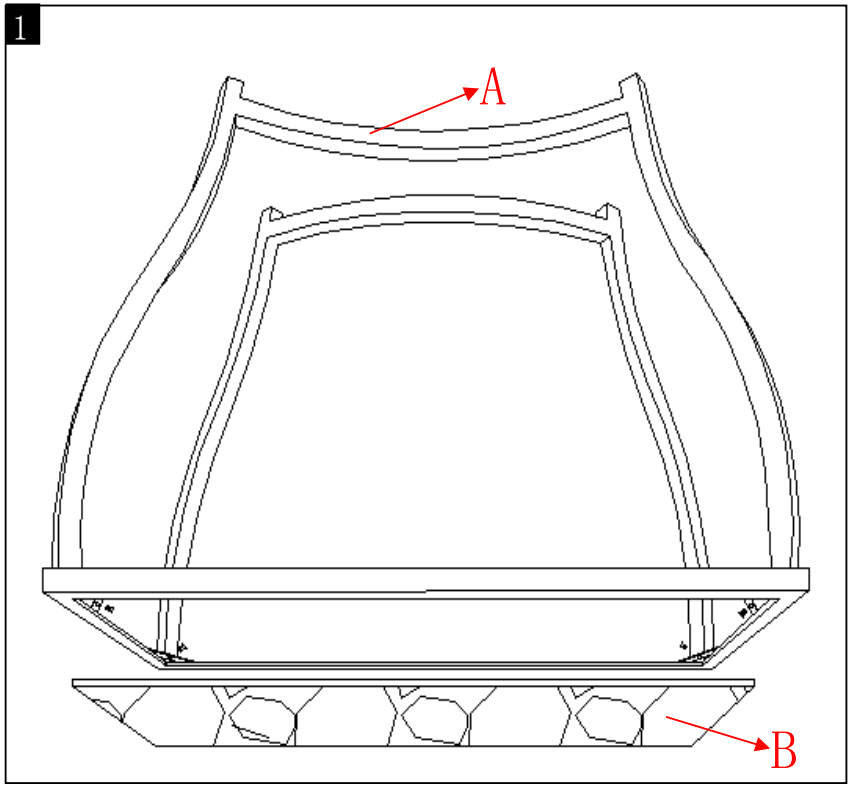

Step 1
Assemble the Frame(A) Square Marble(B)
together using 4 Screws.