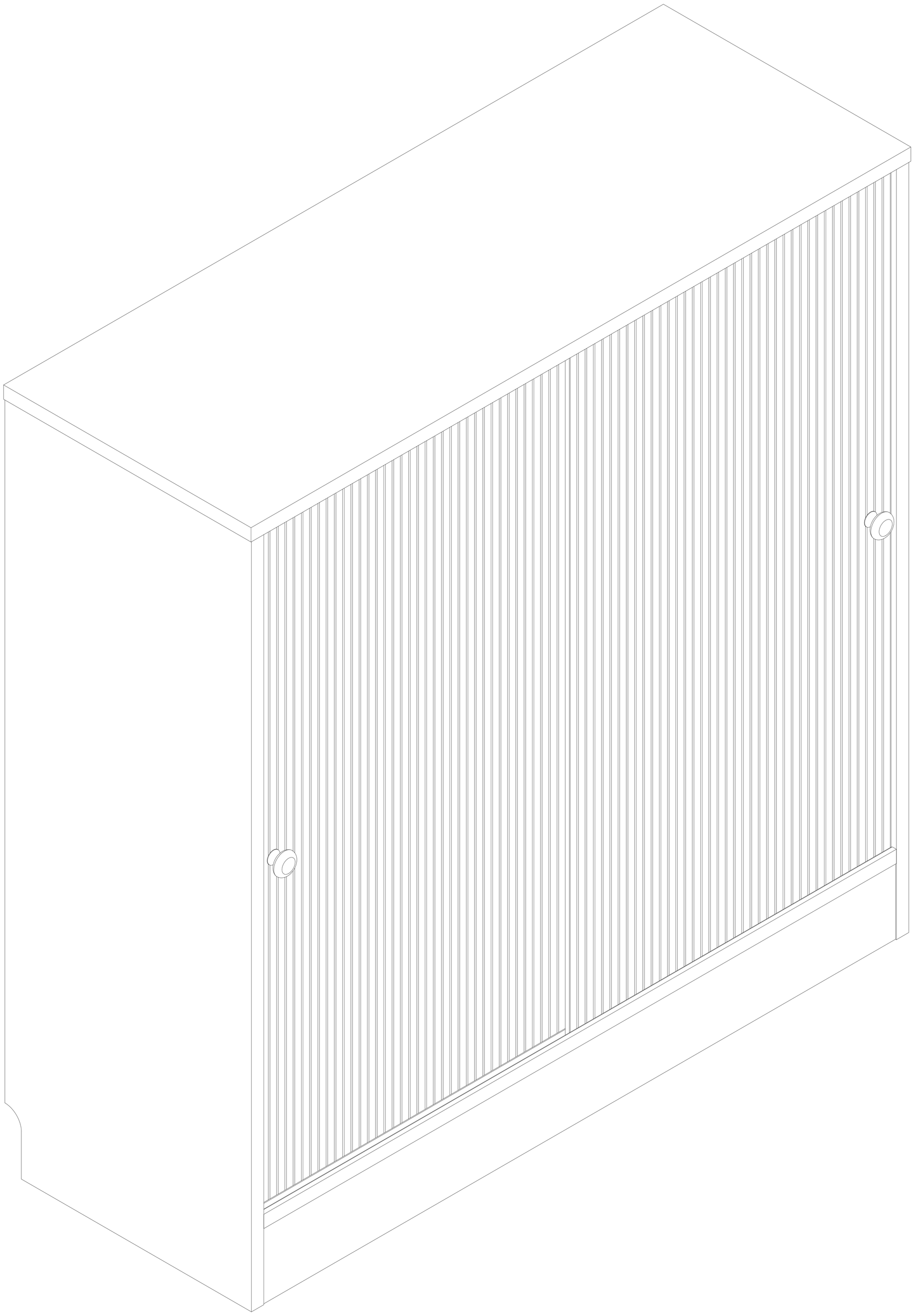

General Guidelines

- Please read the following instruction carefully and use the product accordingly.
- Please keep this manual and hand it over when you transfer the product.
- Please check that you have all the listed components and tools, before you start assembling the item.
- Assemble the item as close to its final position(in the same room) as possible.

Care and Maintanance

- The product is intended for indoor use only. The product must be assembled and used in accordance
- with the provisions of the manual.
- Avoid long-term exposure to humid environments to prevent mildew.
- Keep the product away from fire sources and high temperatures. Do not expose the product to direct sunlight.
- Do not place any hot objects on the surface of the product.

Warning ⚠

- Keep children and animals away from the work area, small parts could choke if swallowed.
- Children are not allowed to climb or stand on the product to avoid personal injury caused by the product tilting or tipping over.
- Please do not use the product if there is/are defective and/or missing part/s, as this can result in damage or injury.
- To avoid the potential dangers of suffocation, please keep all parts and packaging (film, plastic bags, foam, etc.) away from babies and children.

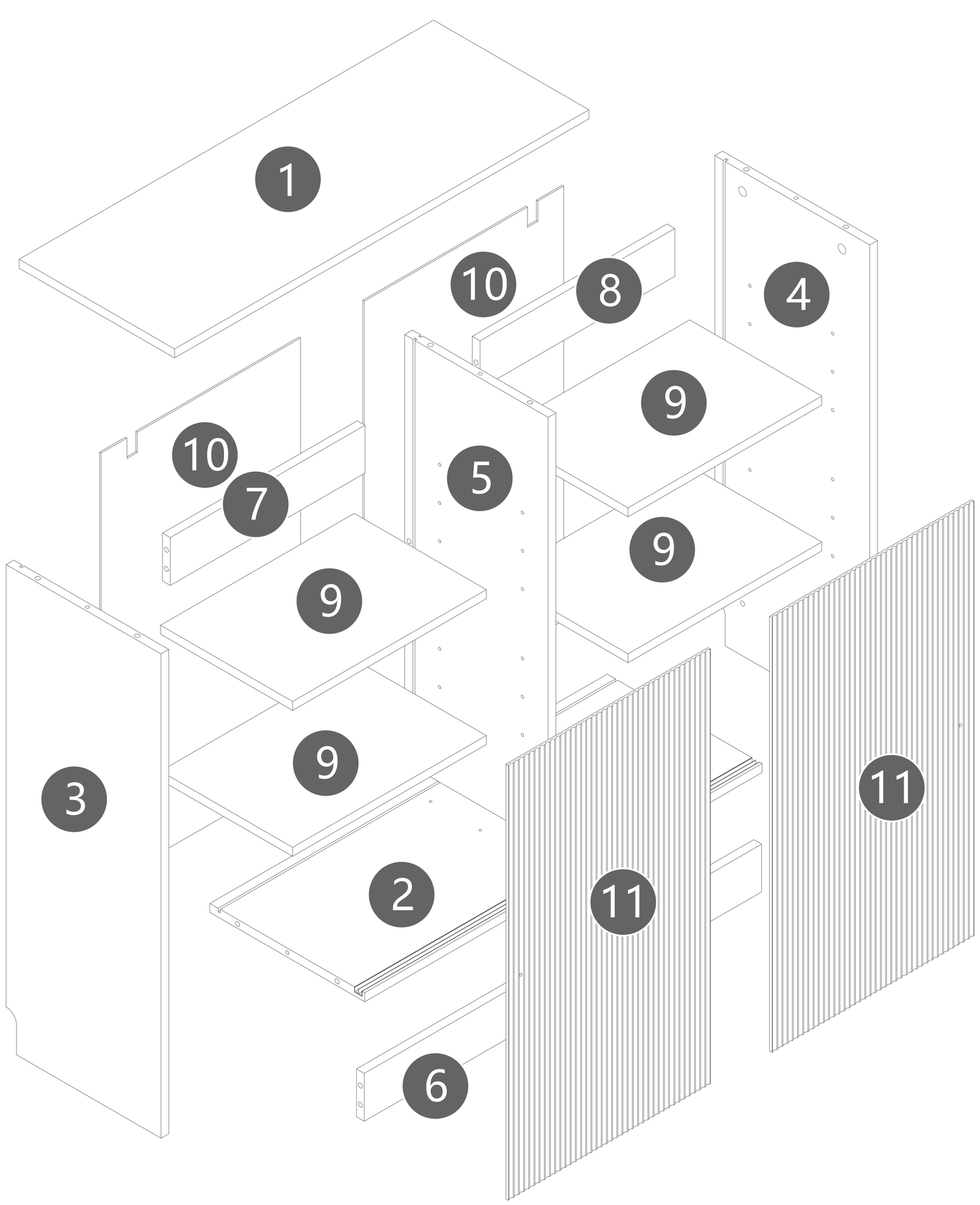
1
10
8
4
9
10
7
5
9
9
9
3
11
2
11
6
11

1 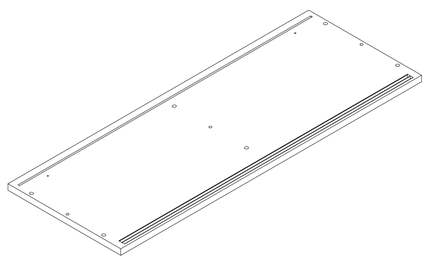 800*300(mm) 31.5*11.81(inch) 1PC	2 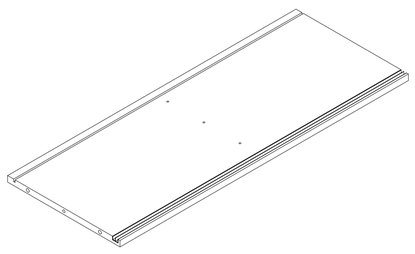 767*299(mm) 30.2*11.77(inch) 1PC	3 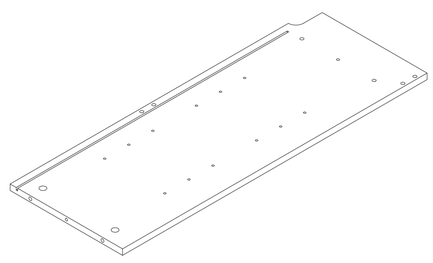 810*299(mm) 31.89*11.77(inch) 1PC	4 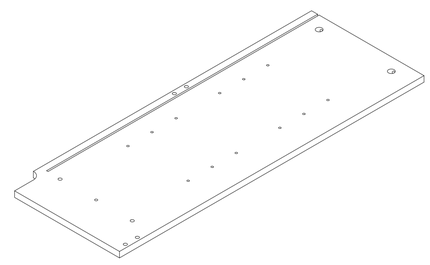 810*299(mm) 31.89*11.77(inch) 1PC	5 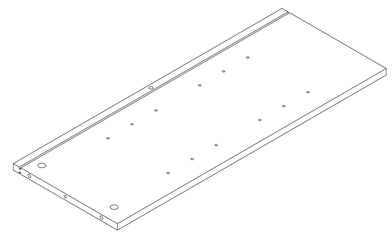 715*277(mm) 28.15*10.91(inch) 1PC
6 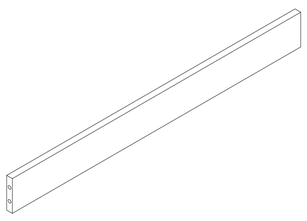 767*80(mm) 30.2*3.15(inch) 1PC	7 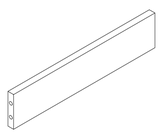 376*80(mm) 14.8*3.15(inch) 1PC	8 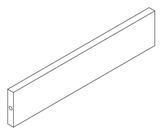 376*80(mm) 14.8*3.15(inch) 1PC	9 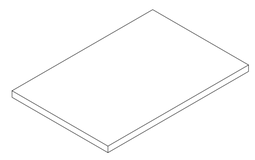 374*255(mm) 14.72*10.04(inch) 4PCS	10 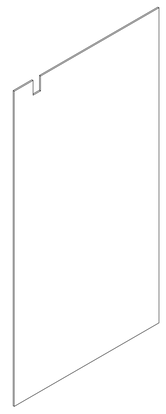 726*385(mm) 28.58*15.16(inch) 2PCS
11 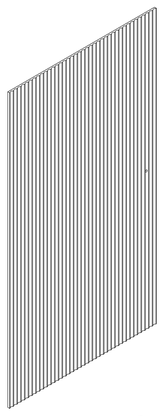 727*390(mm) 28.62*15.35(inch) 2PCS				

A 21x

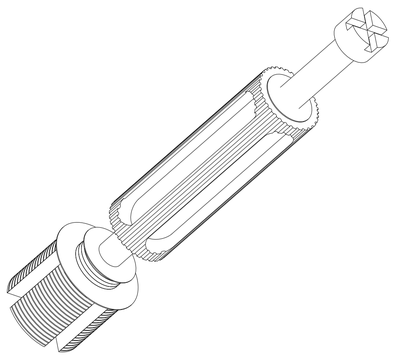

B 21x

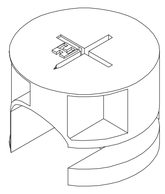

15x12mm

C 5x

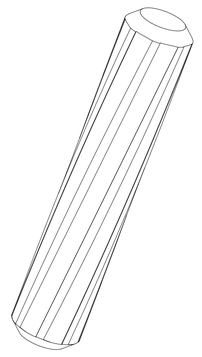

M8x40mm

D 3x

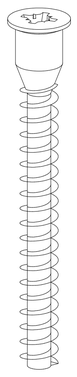

M7x50mm

E 10x

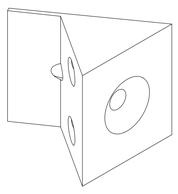

F 10x

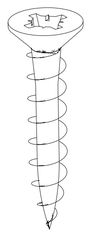

M3x12mm

G 2x

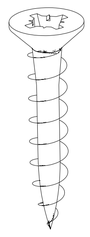

M3.5x14mm

H 2x

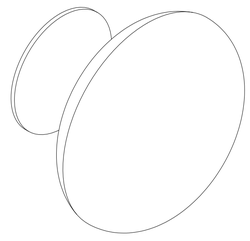

I 2x

M4x8mm

J 16x

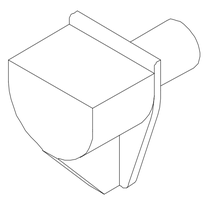

K 13x

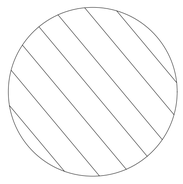

L 2x

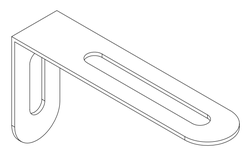

M 2x

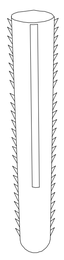

M8x40mm

N 2x

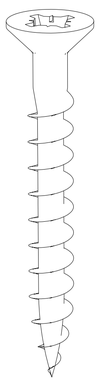

M4x50mm

Hardware installation demonstration

NOTE:Please make sure "A"hardware tightened and can't be pulled out!

I

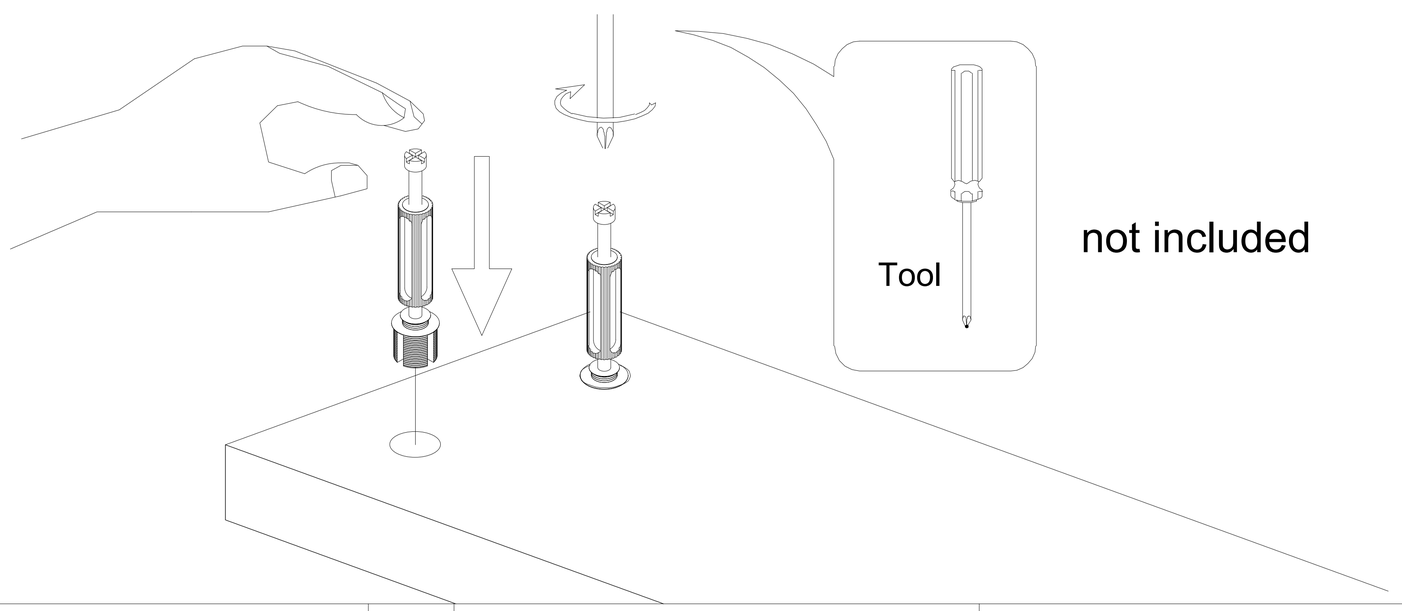

II

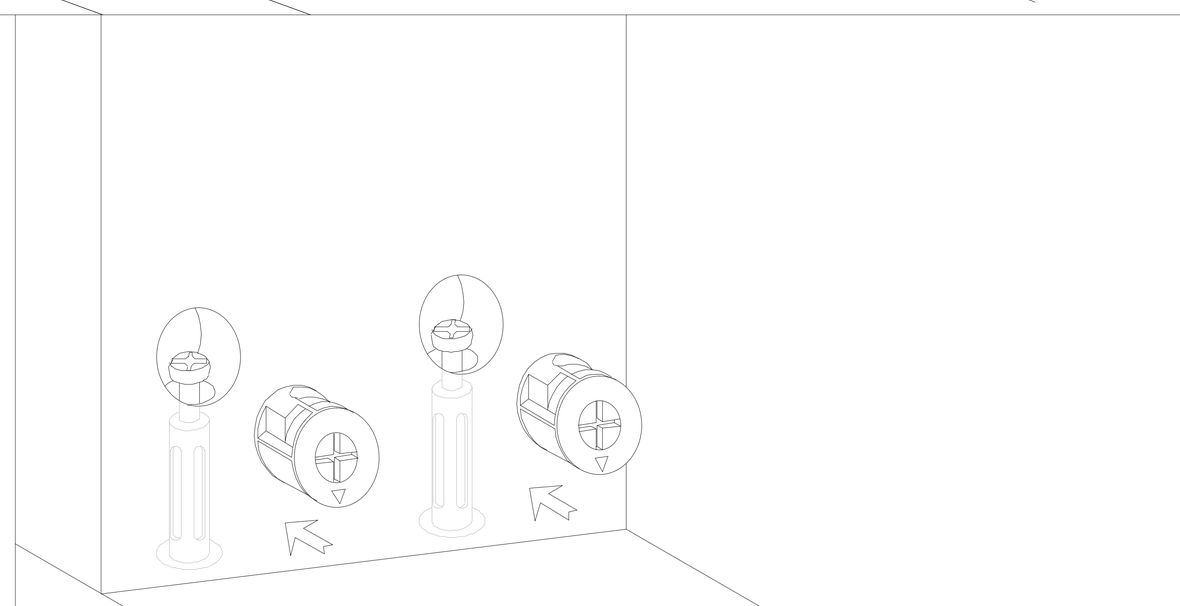

III

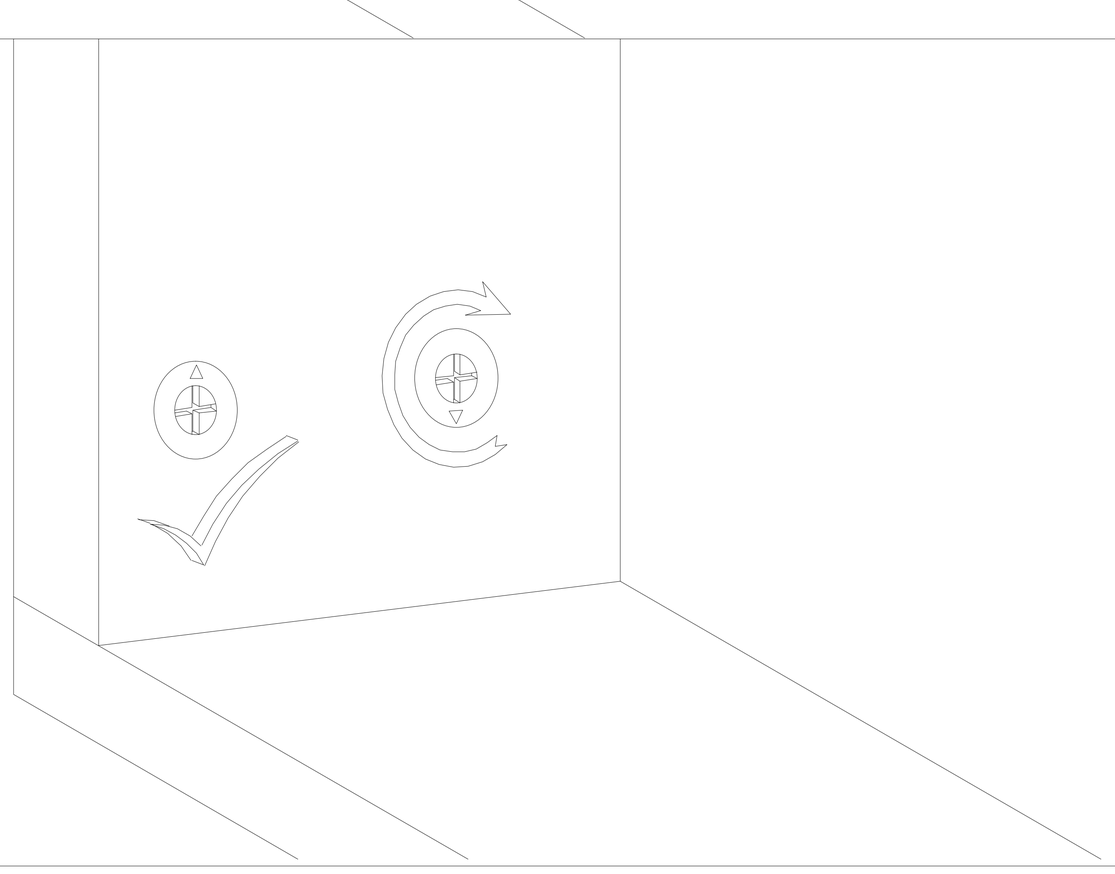

01

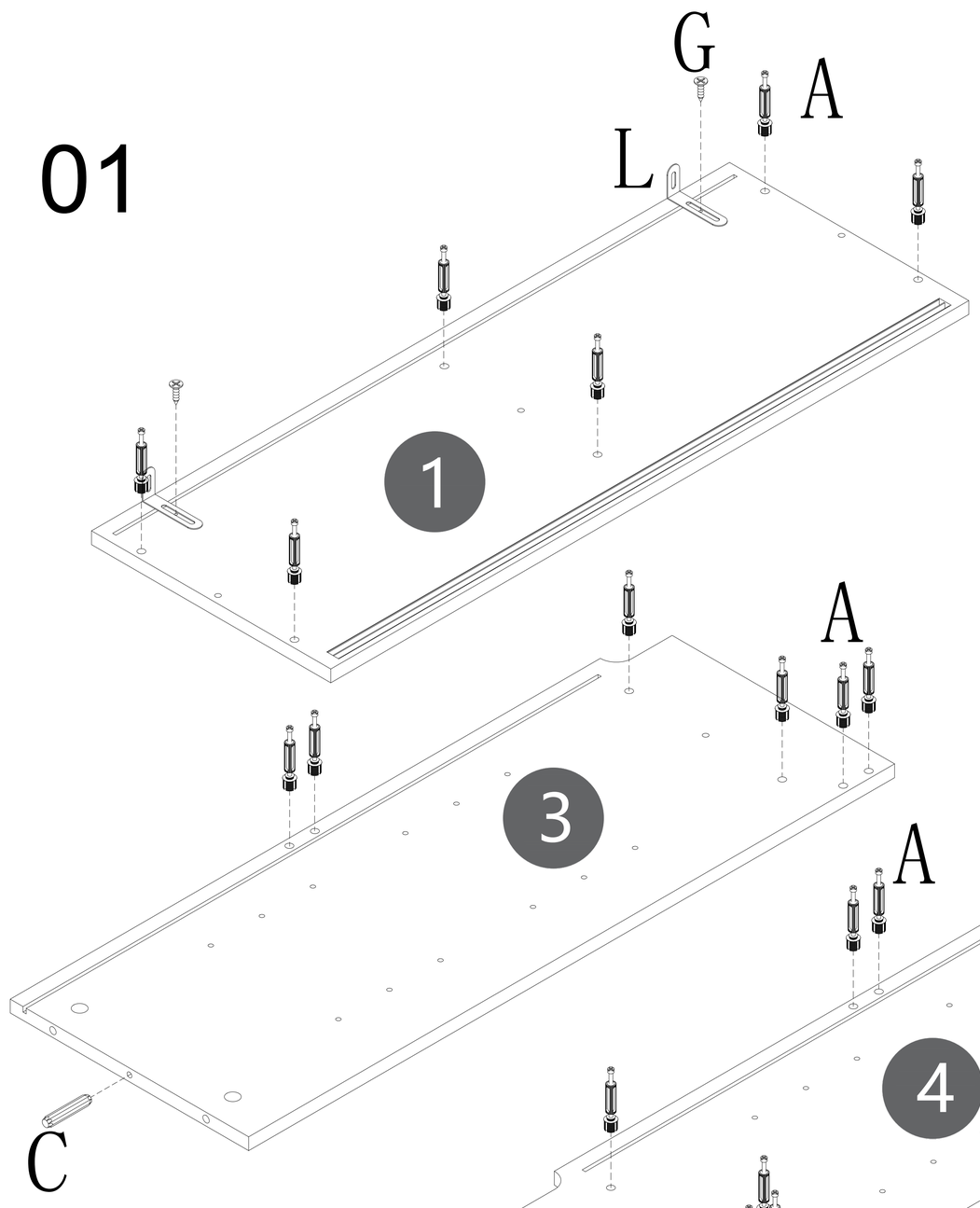

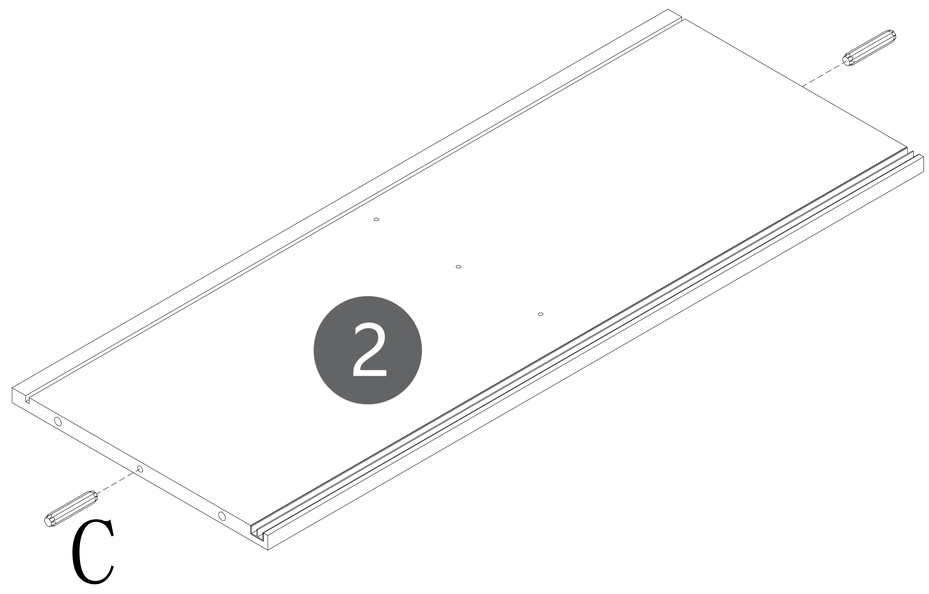

A 18x

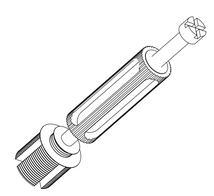

C 4x

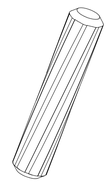

G 2x

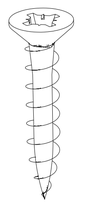

L 2x

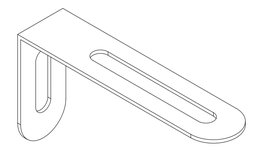

02

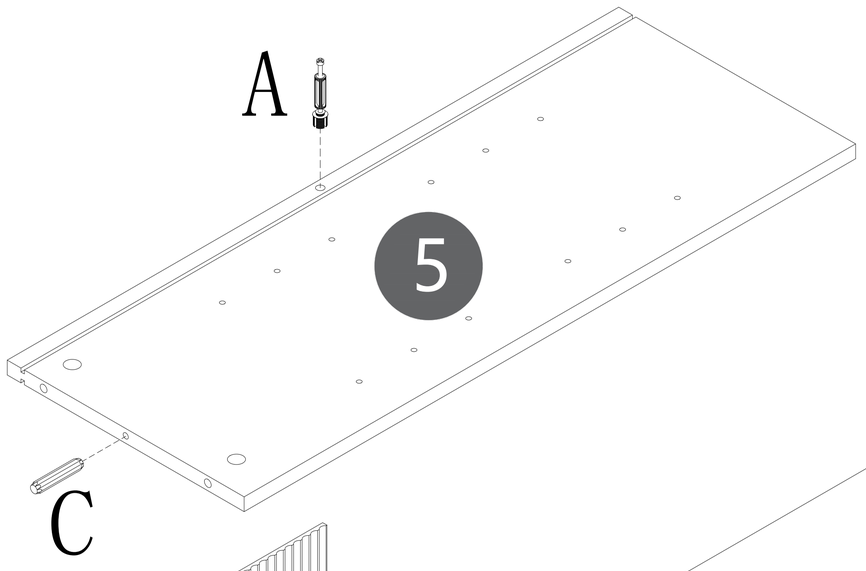

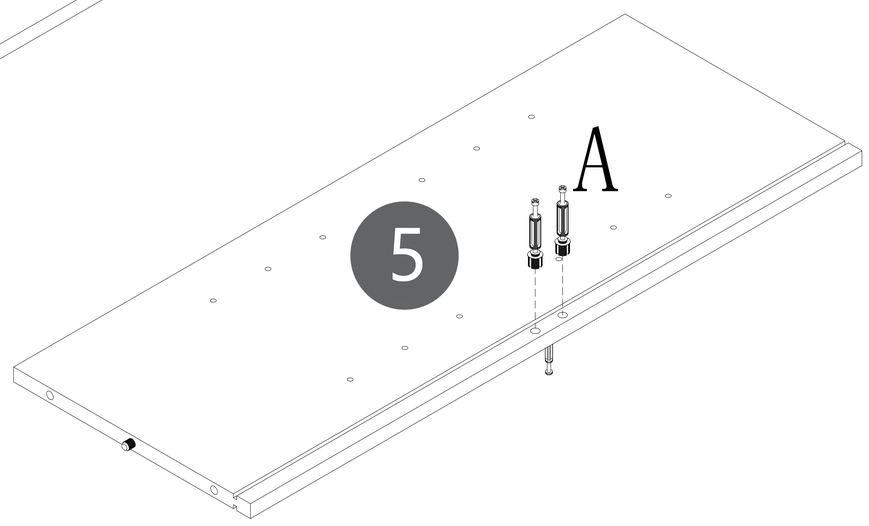

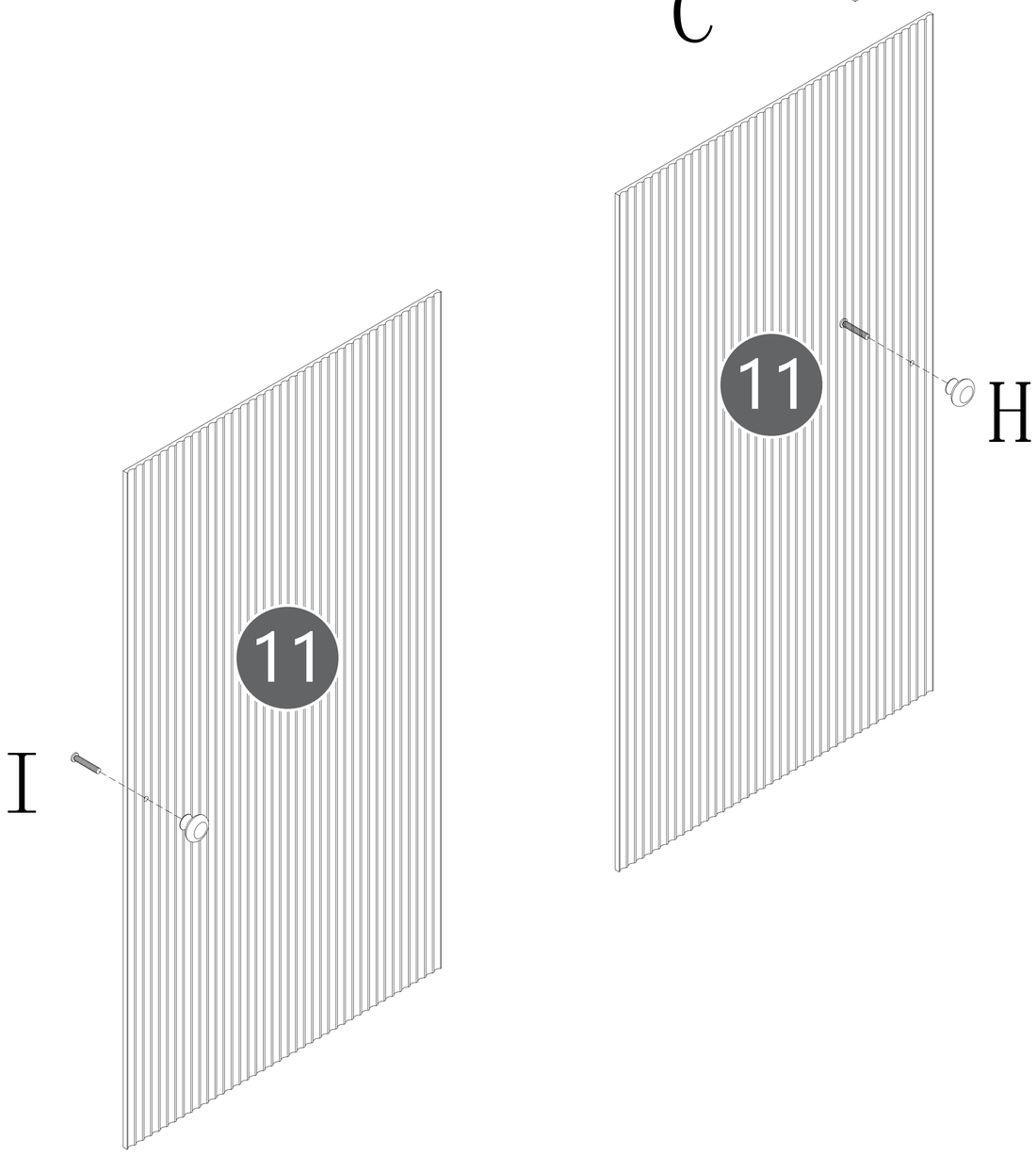

A 3x

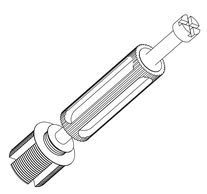

C 1x

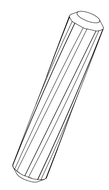

H 2x

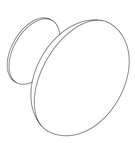

I 2x

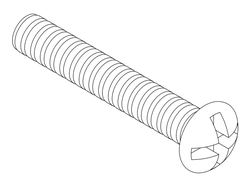

03

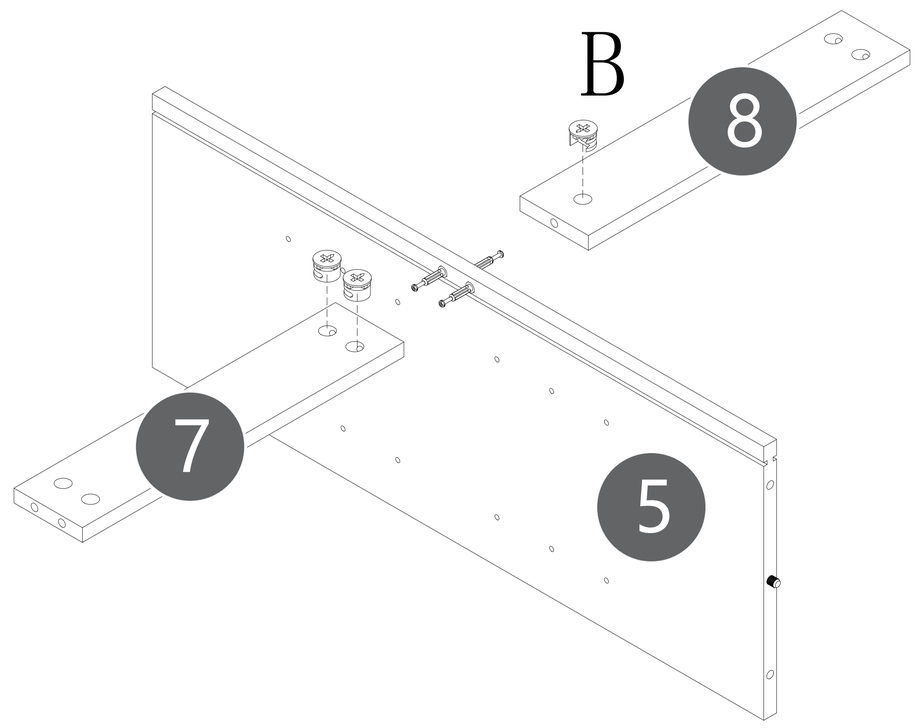

B 3x



04

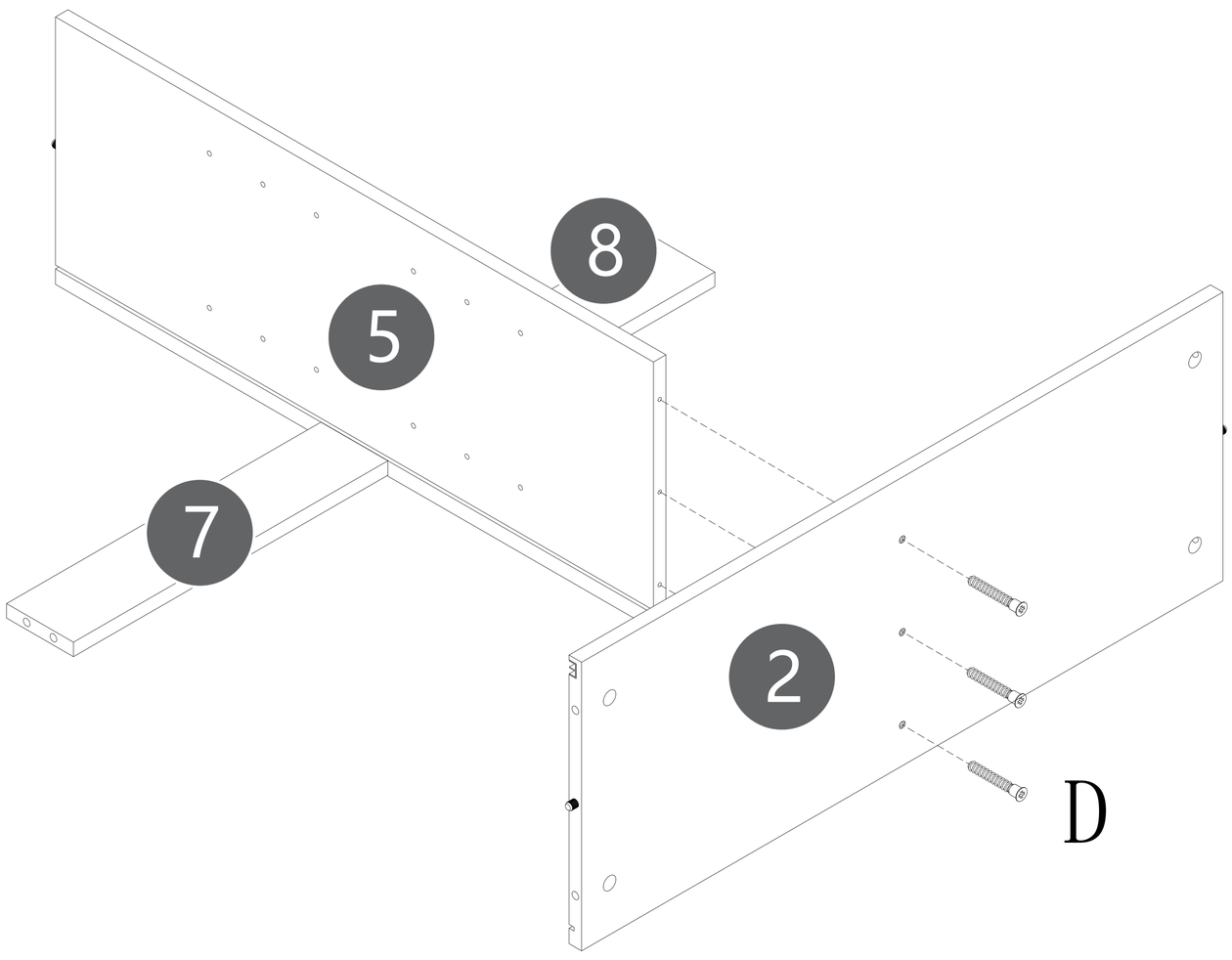

D 3x

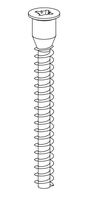

05

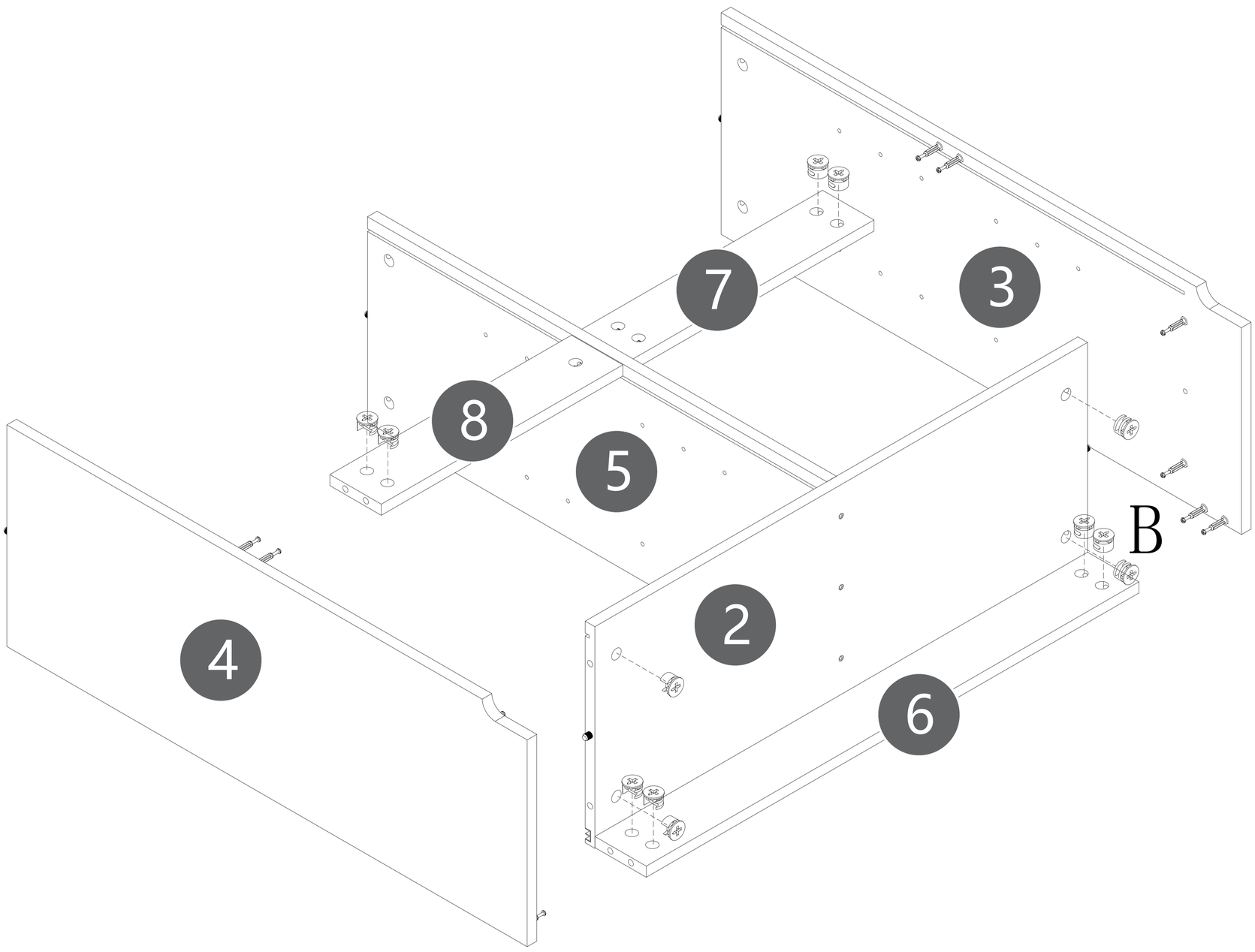

B 12x

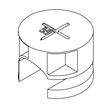

06

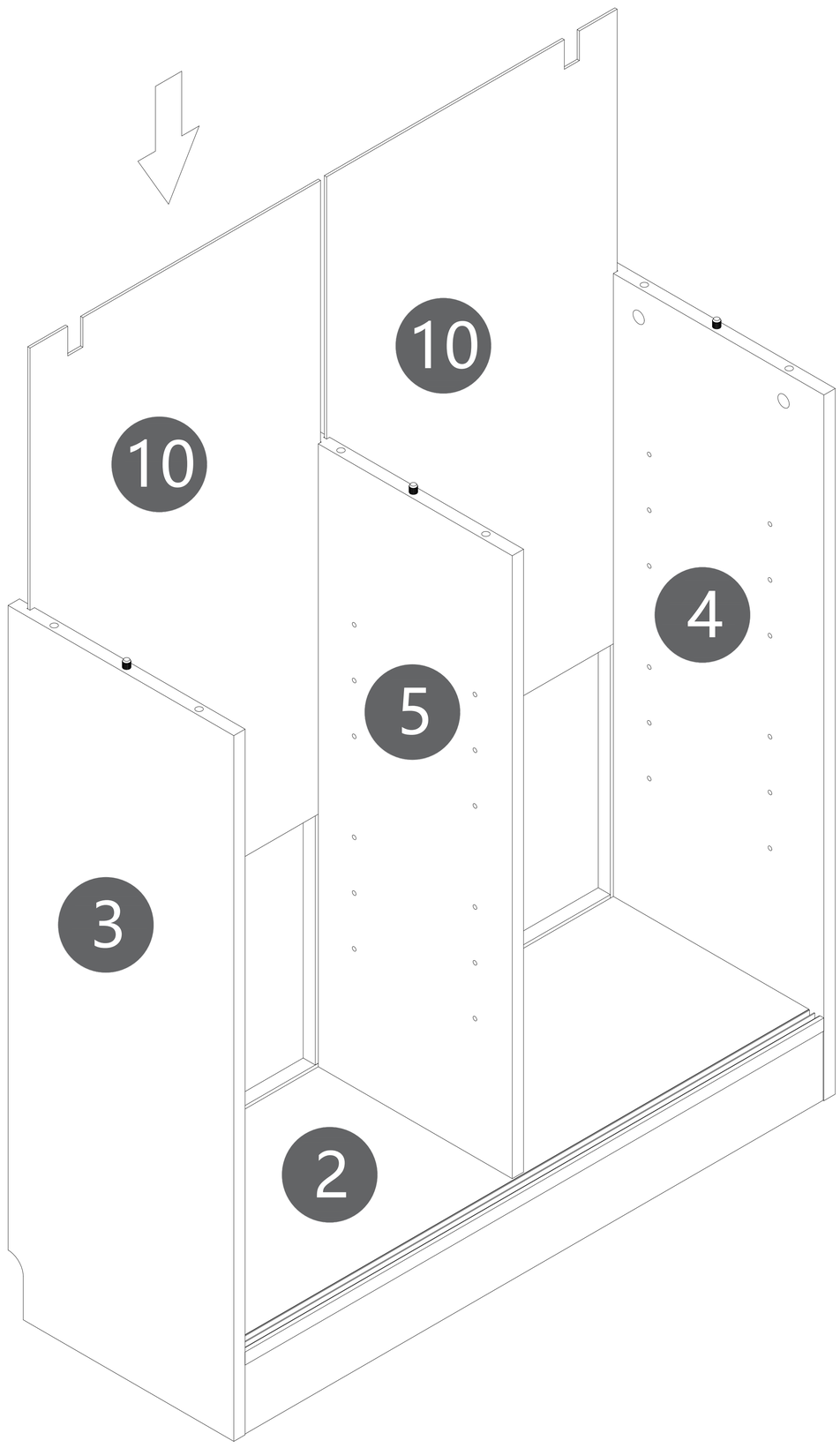

07

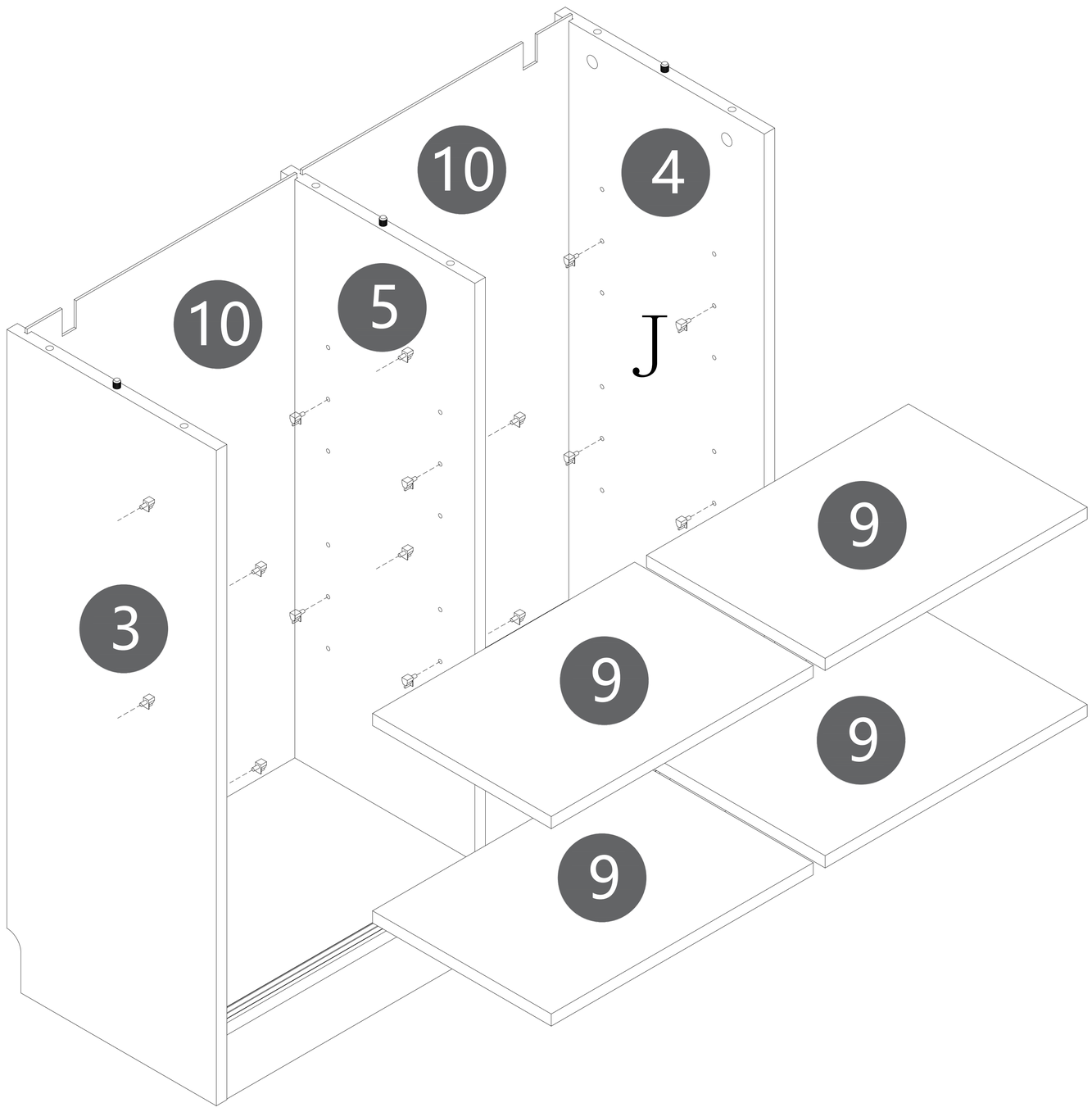

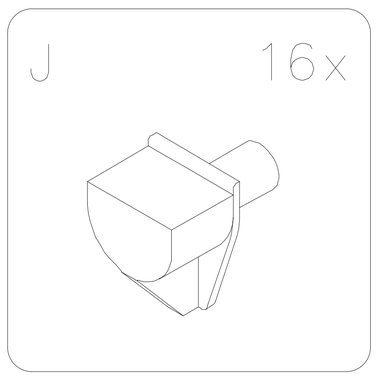

08

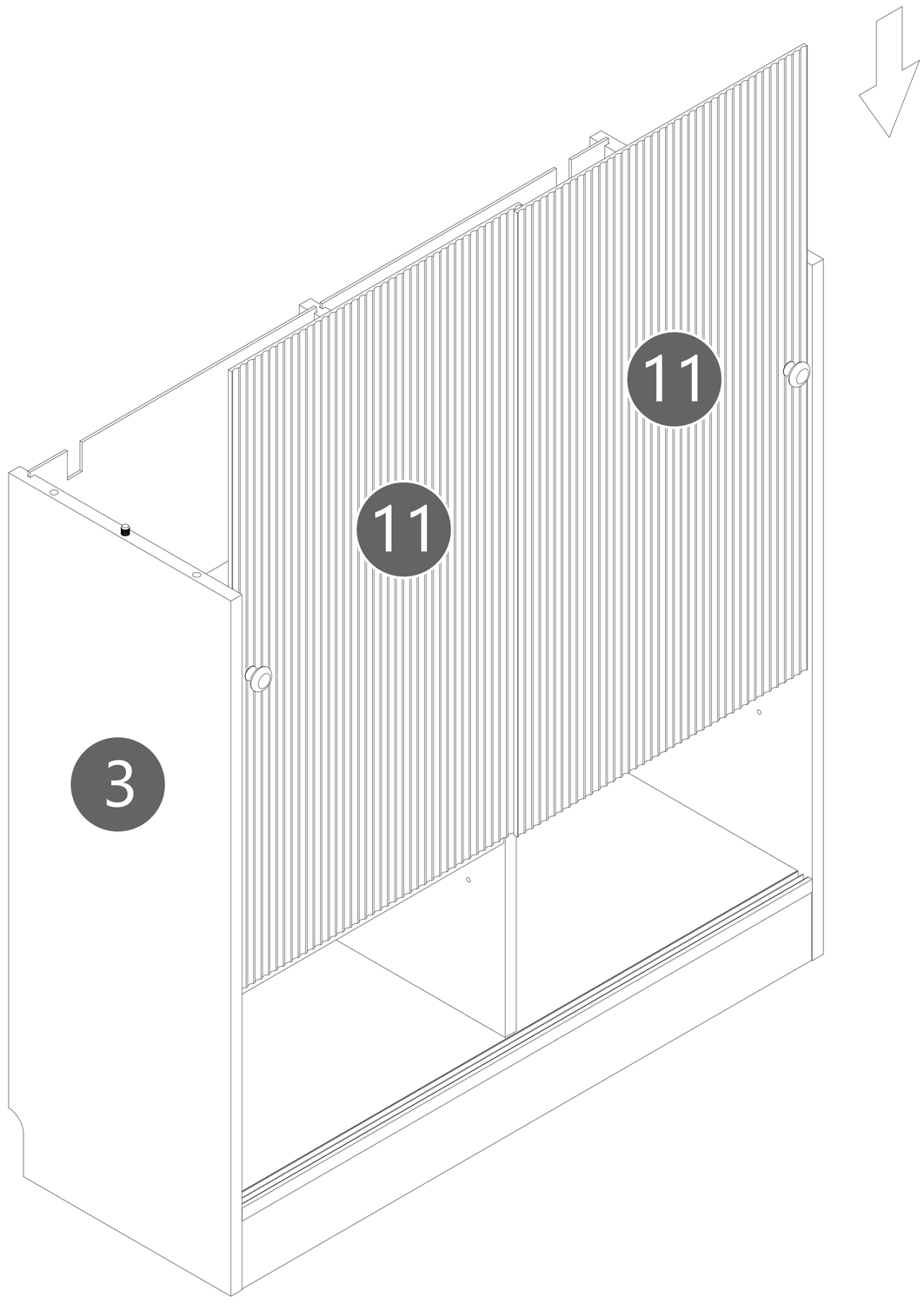

09

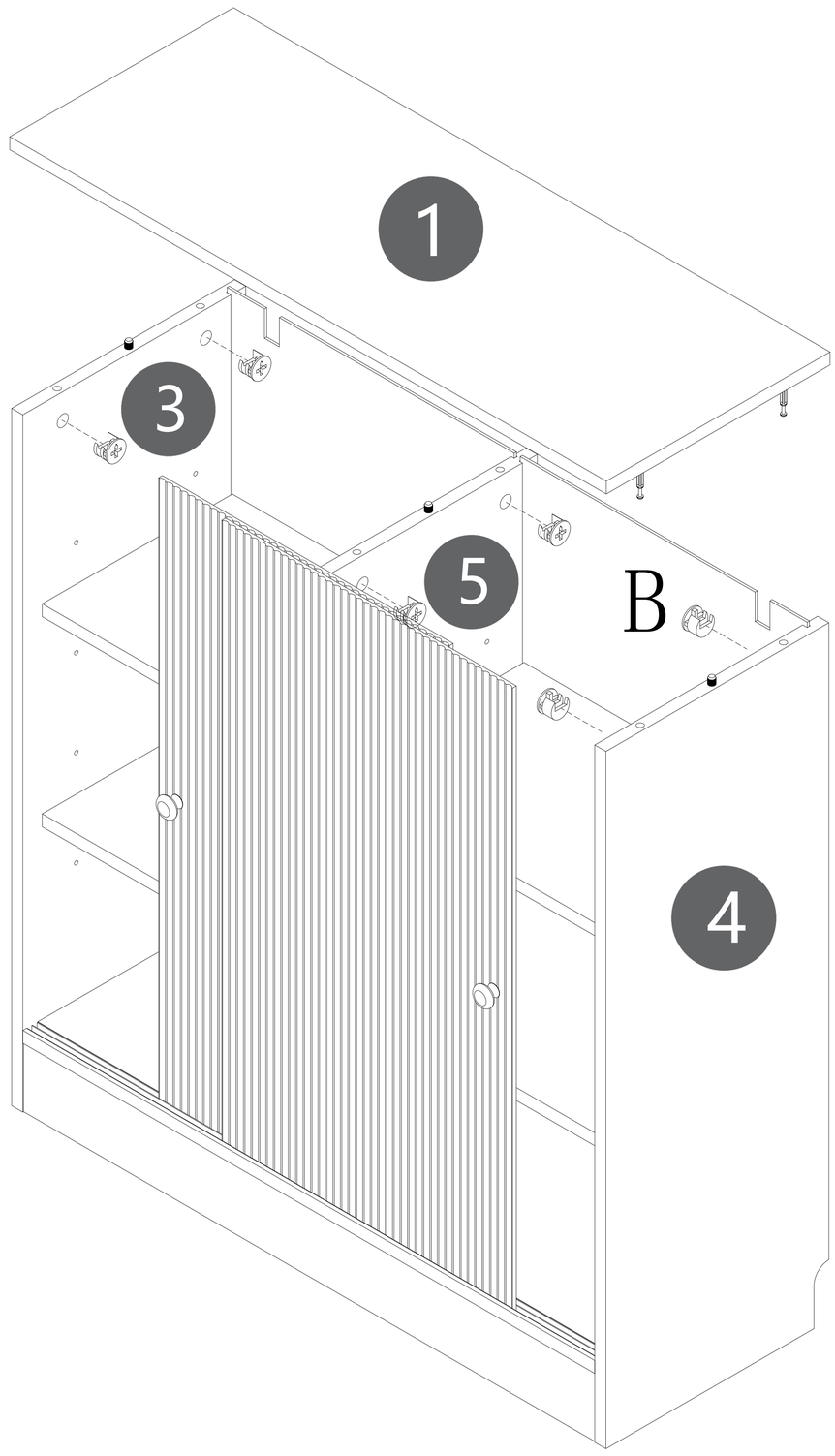

B 6x



10

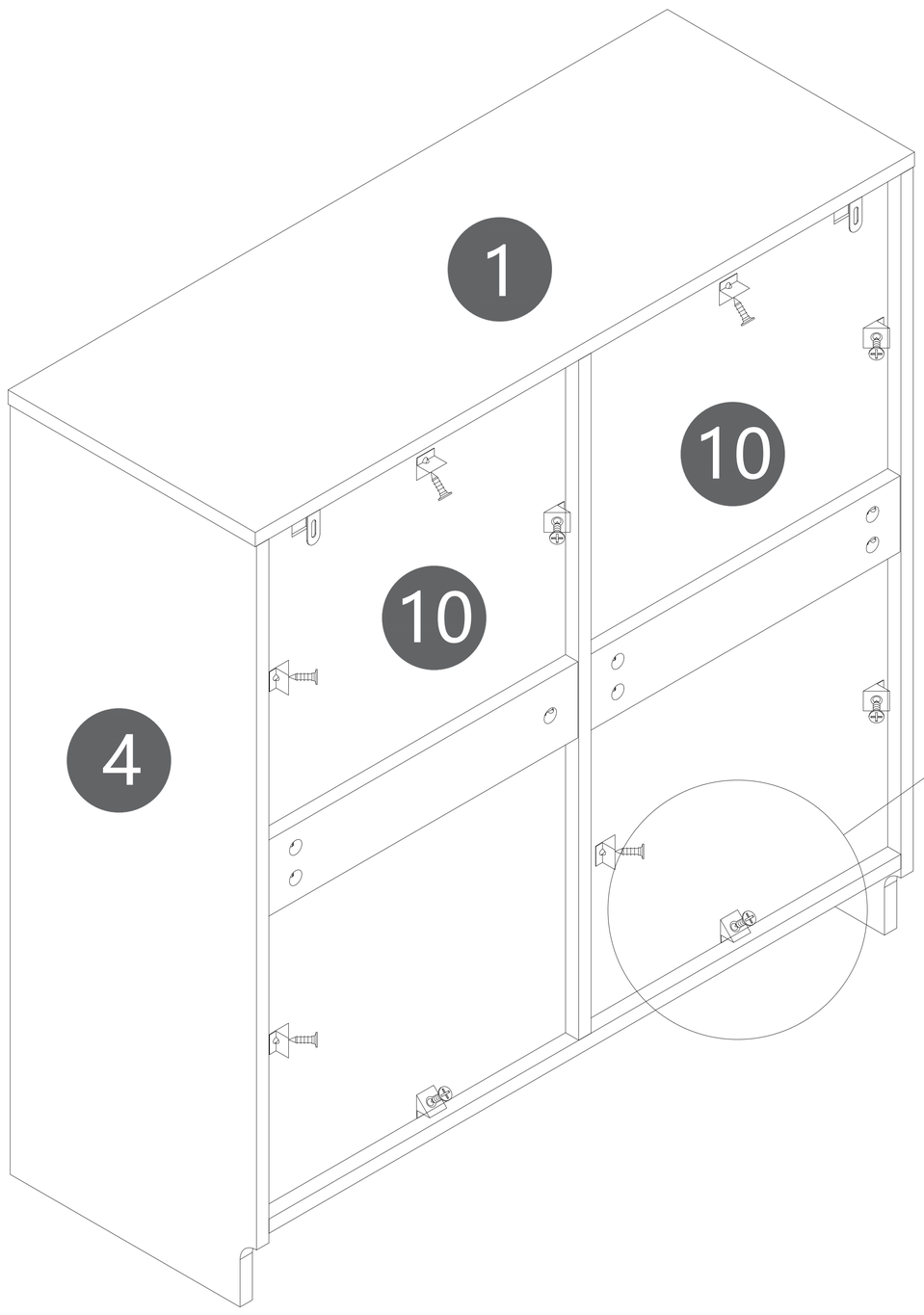

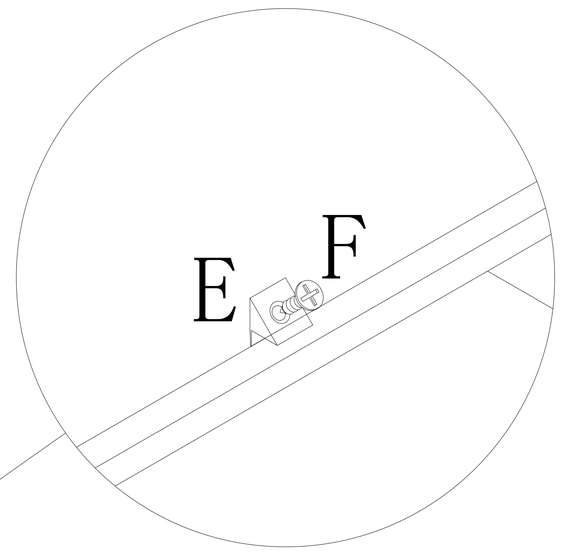

E 10x

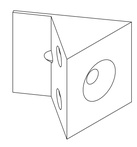

F 10x

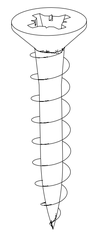

11

