Manual Book

Ceiling Fan with Lights

Model No.: CFL-1103-02

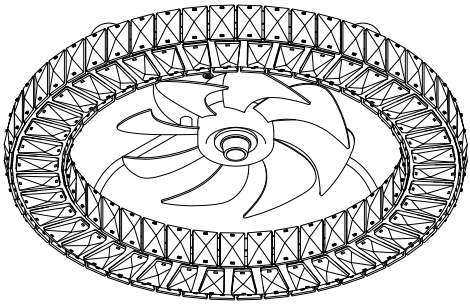

Scan for Installation Video

APP Control Applicable

Contact Information

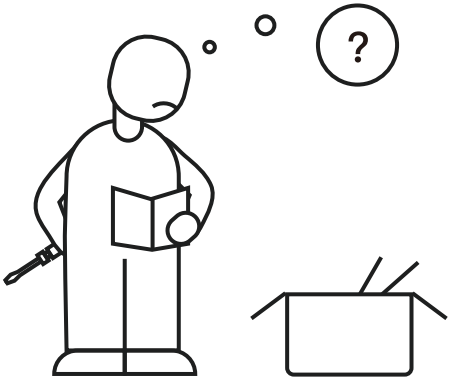

Please contact us with following information:

1. Screen shot of your order page, including product picture, name and order ID number.
2. Problem details with pictures / short video if possbile.

Email: lightingcustomercare@gmail.com

Packing List

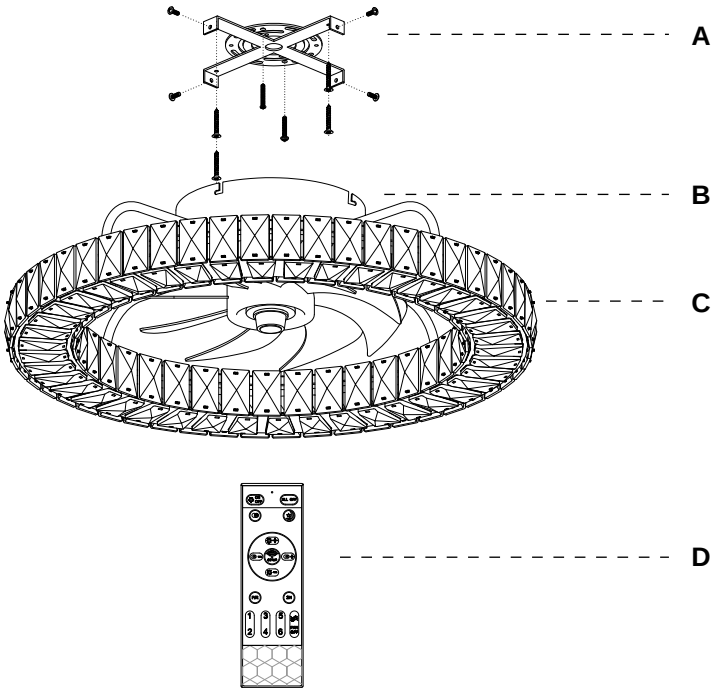

Part	Description	Quantity
A	Bracket	1
B	Canopy	1
C	Fan Assembly	1

Part	Description	Quantity
D	Remote Control	1

Note:

1. Some parts may be assembled together in the package.
2. Crystal is fragile and spare parts are included.

Installation kit

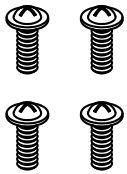

AA

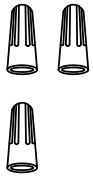

BB

CC

DD

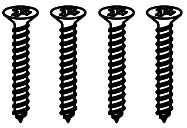

EE

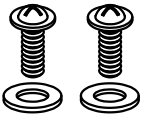

FF

Part	Description	Quantity
AA	Canopy Screw (assembled)	4
BB	Wire nut	3
CC	Pair of Gloves	1
DD	“S” Hook	1
EE	Wood Screw (opitional)	4
FF	Machine Screw & Washer for Outlet Box (spares)	2

Note:
Some extra hardware may be included. The quantity listed above is the number required for installation.

Safety Rules

1. Be sure the power to the wires you are working on is disconnected, either the fuse is removed or the circuit breaker is turned off. Turning the power off using the light switch is not sufficient to prevent electrical shock.
2. A qualified licensed electrician is required for the installation.
3. The outlet box and support structure must be securely mounted and capable of reliably /supporting a minimum of 50 pounds. Use only UL (cUL for Canadian Installation) listed mounting boxes marked "FOR FAN SUPPORT".
4. The fan must be mounted with a minimum of 7 feet clearance from the trailing edge of the blades to the floor.
5. Do not operate reversing switch while fan blades are in motion (if applicable). Fan must be turned off and blades stopped before reversing blade direction.
6. Do not place any objects in the path of the blades.
7. To avoid personal injury or damage to the fan and other items, be cautious when working around or cleaning the fan.
8. Do not use water or detergents when cleaning the fan or fan blades. A dry dust cloth or lightly dampened soft cloth will be suitable for the cleaning.
9. After marking electrical connections, spliced conductors should be turned upward and pushed carefully up into outlet box. The wires should be spread apart with the grounded conductor on one side of the outlet box.
10. Electrical diagrams are reference only, different fan light may have different light shade and bulbs.
11. Use only our replacement parts. This equipment has been tested and found to comply with the limits for a class B digital device, pursuant to part 15 of the FCC Rules. These limits are to provide reasonable protection against harmful interference in a residential installation. This equipment generates, uses and can radiate radio frequency energy and if not installed and used in accordance with the instructions may cause harmful interference to radio communications.

Warning:
To reduce the risk of personal injury, use only the two steel screws and washers provided with the outlet box for mounting to the outlet box. Most outlet boxes commonly used for the support of lighting fixtures are not acceptable for fan support and need to be replaced, consult a qualified electrician if in doubt.

To reduce the risk of fire, electric shock or person injury, mount fan to outlet box marked "acceptable for fan support".

To reduce the risk of personal injury, do not bend the blade brackets (also referred to as flanges) during assembly or after installation. Do not insert objects in the path of the blades.

Installation Preparation

Tools You Need

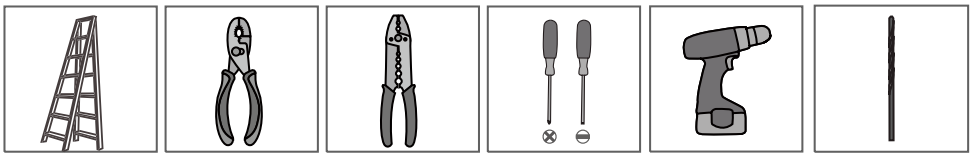

- ☑ Ladder
- ☑ Pliers
- ☑ Wire Strippers
- ☑ Screwdrivers
- ☐ Power Drill (optional)
- ☐ Drill Bit (optional)

If mounting to a support structure, you will also need the optional tools.

What to Expect with Your Installation

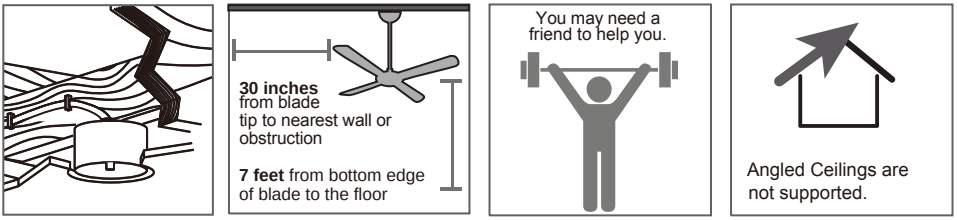

- ☑ Must be able to secure the fan to building structure or fan-rated outlet box
- ☑ Assess location
- ☑ Check box to see fan weight
- ☒ Angled Ceiling not supported

Installation Preparation

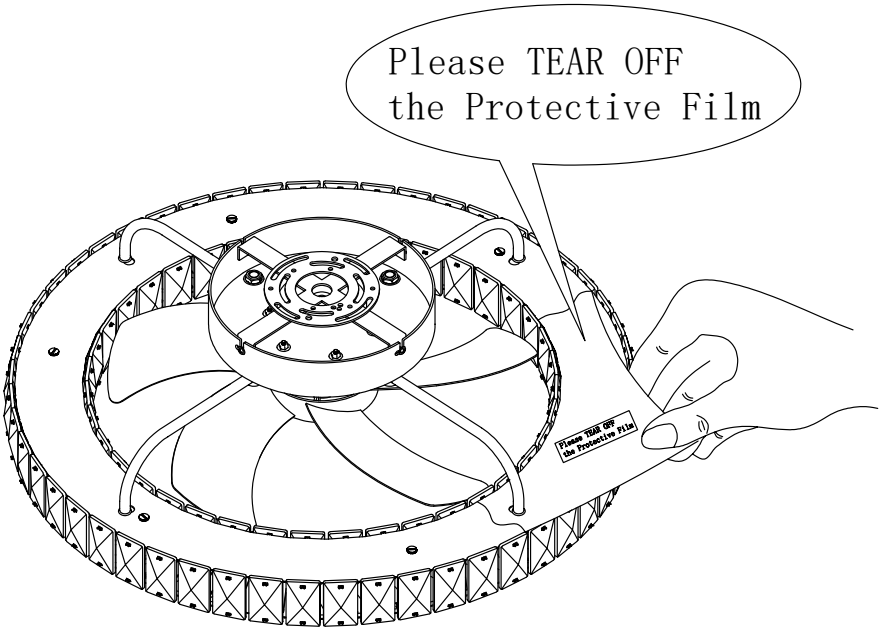

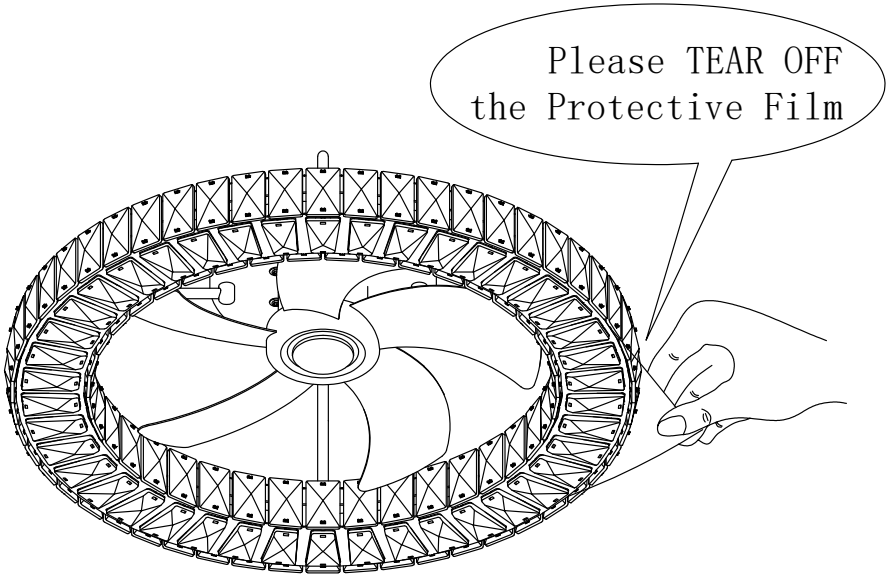

Installation Step 1 (Mount the Bracket)

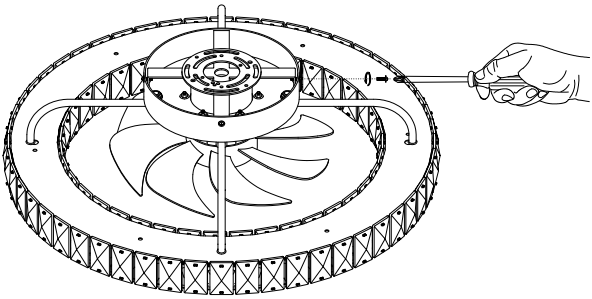

Loosen screws from the canopy (don't take off), take out the bracket from the canopy.

With Outlet Box: Fix the bracket onto the outlet box with screws from the outlet box, fix the cross bar of the bracket onto to the ceiling with 4 wood screws (optional).

Without Outlet Box: Fix the cross bar onto the solid wood structure with 4 wood screws.

Option 1

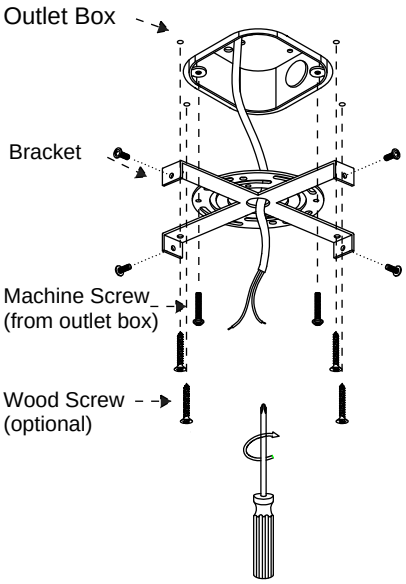

OR

Option 2

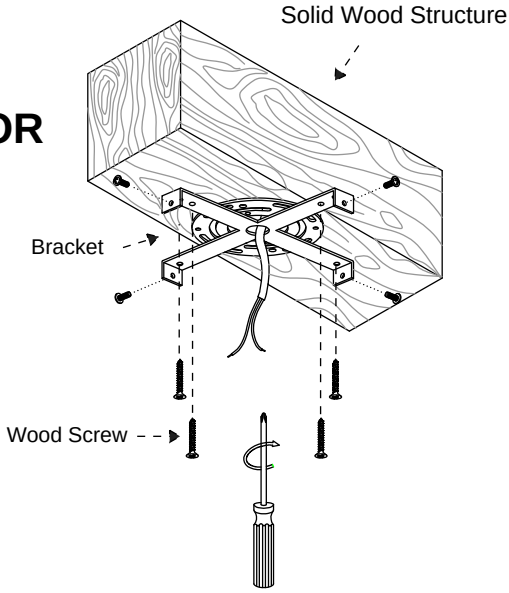

Installation Step 2 (Connect the wires)

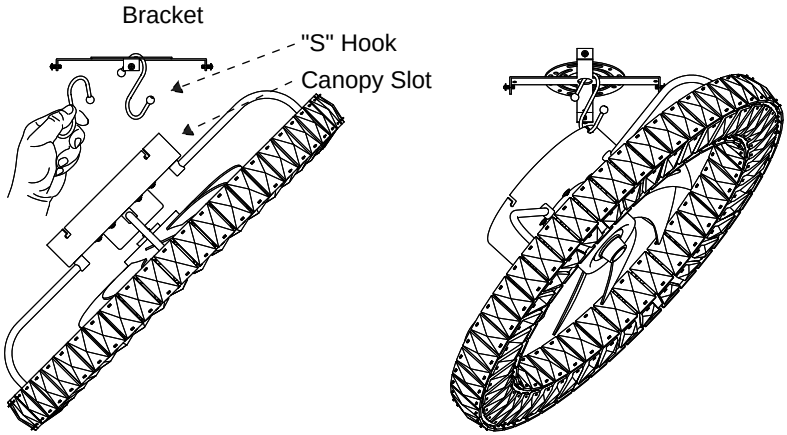

1. Hang the fixture onto the bracket with "S" hook provided.

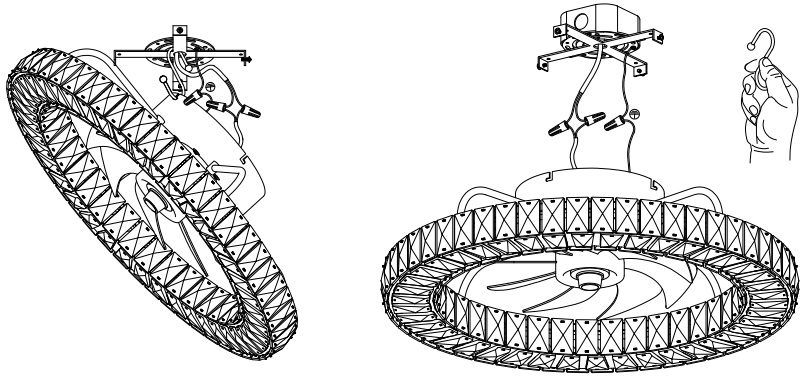

2. Connect wires from the fixture to the wires from outlet box with wire nuts, ground wire (green, green/yellow or bare copper) to ground wire, neutral wire (white or blue) to the neutral wire, hot wire (black or brown) to the hot wire. Wrap the connection with electrical tape.

3. Take away the "S" hook.

Installation Step 3 (Fix the Canopy)

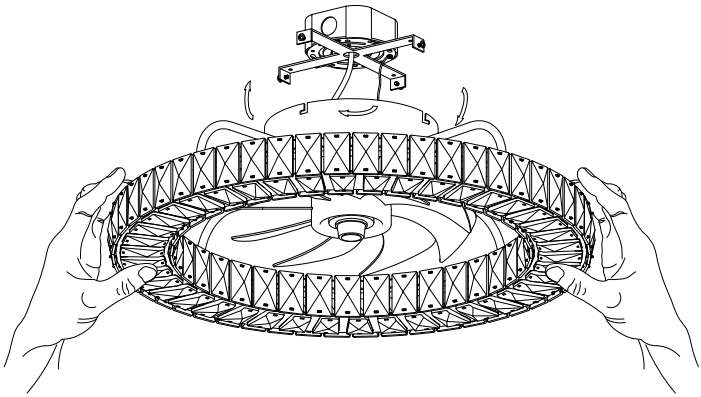

1. Fix the bracket screws onto the bracket but not tighten them.
2. Align the "L" slots from the canopy to the screws on the bracket, rotate the canopy to lock it onto the bracket.
3. Tighten the screws.

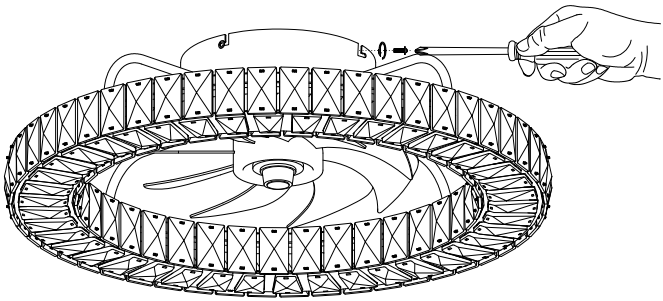

Remote Control Instructions

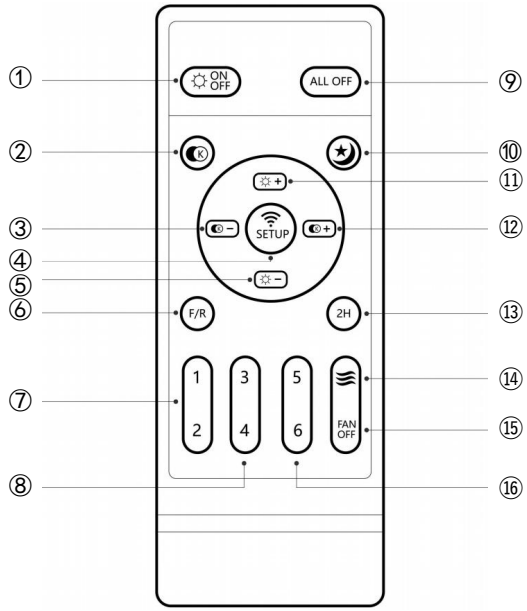

NOTE:
Please insert 2 batteries before using.
AAA 1.5V battery x 2pcs (not included)

① Turn on/off the light.
② Quick switch of the light color: Yellow Light→White Light→Natural Light
③⑫ Adjust the light color temperature.
④ **SETUP: remote signal pairing.** If the remote control looses signal of the fan, press and hold this button at the very beginning after it's powered on from wall switch. After the fan flashes or beeps, it's paired successfully.
⑤⑪ Adjust the brightness of the light.
⑥ Fan moves forwards or reversely.
⑦⑧⑯ Fan speed.
⑨ Turn off fan including the light.
⑩ Night mode, lights will be dimmed when press this button.
⑬ Timing for 2 hours for the fan.
⑭ Natural wind of the fan, fan speed will change automatically when use this function.
⑮ Turn off the fan.

APP Control Instructions

NOTE: Scan the QR code and install the APP in your phone, or search and install "FanLamp Pro" from Google Play, Apple App and other APP stores.
Make sure your phone is connected to the internet and bluetooth enabled.

Pair button. Click it within 5 seconds after the fan is powered on from wall switch. After the fan flashes or beeps, it has been successfully paired with the phone, it can be controlled through it.

Slide to change the fan speed.

Slide to change the brightness of the light.

Quick switch for "White" light color.

Quick switch for "Yellow" light color.

Quick switch for "Natural" light color.

Night mode, dim the lights.

Fan moves forwards.

Change the direction of the wind (Not applicable on this fan).

Timing the fan.

Natural wind: fan speed will change automatically when use this function.

Sleeping wind (Not applicable on this fan).

Fan moves reversely.

Turn on/off the light.

Turn on/off the fan.

Unpair button. Click it within 5 seconds after the fan is powered on. After the fan flashes or beeps, it has been successfully unpaired with the phone.

Trouble Shooting

1. Fan doesn't work

• Make sure the fixture is connected to an ON/OFF wall switch, not dimmer switch.
• Check the remote control battery (not included in this package).
• Check the circuit breaker to ensure the power is on.
• Turn off power from the circuit breaker, then loosen the canopy and check all the connections according to the wiring diagram.

2. Lights Do Not Light Up / Flicker / Noisy Operation

• Make sure the fixture is connected to an ON/OFF wall switch, not dimmer switch.
• Check your power and switch to make sure it's power on.

3. Noisy Operation

• Re-tighten all screws on bracket.
• Check to see if any of the blades are cracked. If so, replace the blades.

4. Remote does not work

• Make sure the battery is installed correctly.
• Pair the remote control again (See page 9).
• Install 2 new batteries.

Clean And Care

To clean, wipe the fixture with soft cloth. Spray from chemical cleaners can discolor the finish of the fixture. Do not use scouring pads, powders, steel wool or abrasive paper to clean this fixture.

Ordering Parts

Keep this manual for future reference, and in case replacement parts are needed. Available parts can be ordered from place of purchase. Use exact wording from diagrams when ordering parts.