TEAR SHEET



Embers 41" Chandelier

Item # RL 5345BS-SBP

Designer: Ralph Lauren

Height: 22.75"
Width: 41.25"
Canopy: 5.5" Round
Finishes: BS, NB
Shade Treatments: SBP
Shade Details: 4.75" x 7.75" x 5.5"
Socket: 6 - E12 Candelabra
Wattage: 6 - 6.5 LED B11
Weight: 31 Pounds
Note: 120V Configuration Only

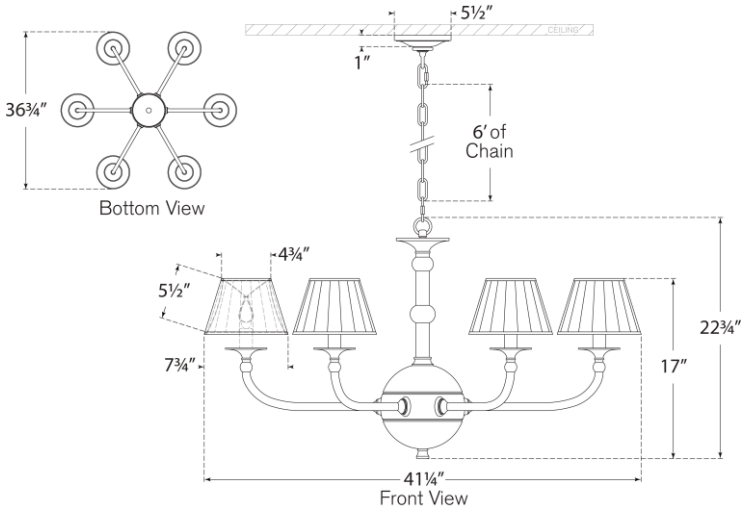

VISUAL COMFORT & CO.