Assembly Instructions

CAUTION: You must read this before you proceed.

Please look in the Backrest Panel for hardware packs.

LEFT CHAIR

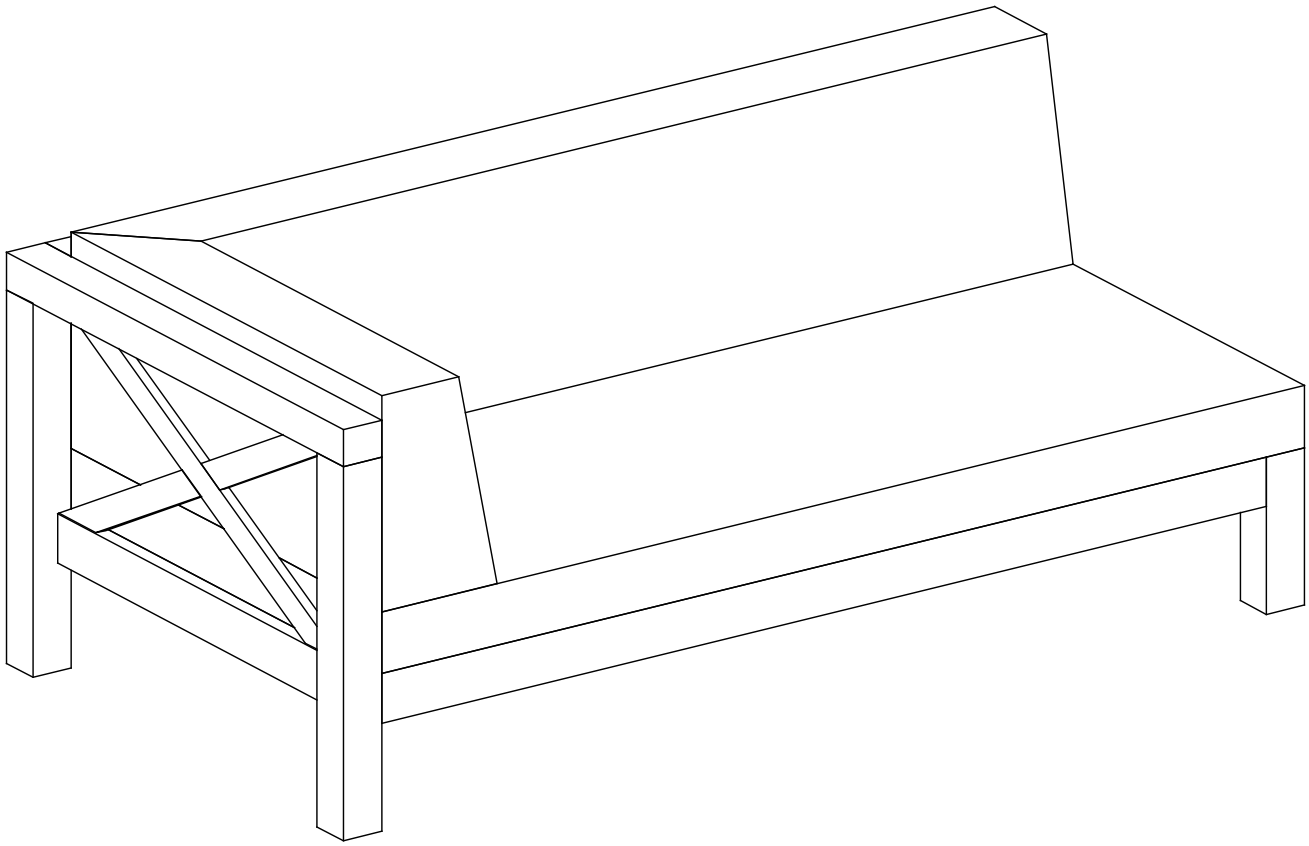

CAUTION : This Left Chair is NOT a TOY.
Keep your child / children at bay in the process of assembly.
For turning the Left Chair and to prevent damage to the Left Chair, 02 persons may be needed to execute this action.

Parts List

No.	Picture	Desc ription	Qty
A	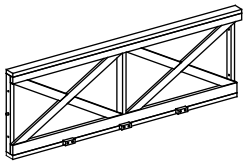	Backrest Panel	1
B	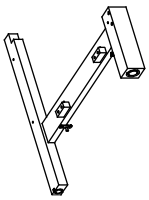	Right Arm Panel (With Pre-installed Levellers)	1
C	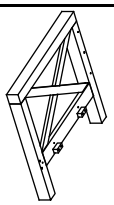	Left Arm Panel With Pre-installed Levellers	1
D	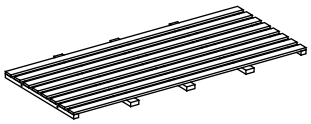	Seat Panel	1
E	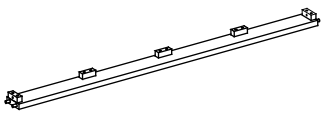	Support Bar	1
F	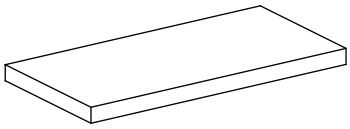	Seat Cushion	1
G	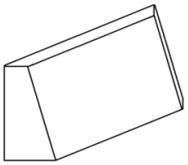	Left Back Cushion	1
H	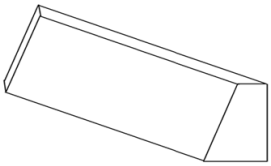	Right Back Cushion	1

Hardware

No.	Picture	Desc ription	Qty
1	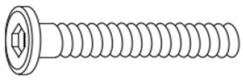	Bolts (M6x35mm)	7
2	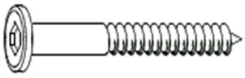	Screws (M6x45mm)	5
3		Allen Key	1

Assembly Preparation

Before Beginning Assembly:

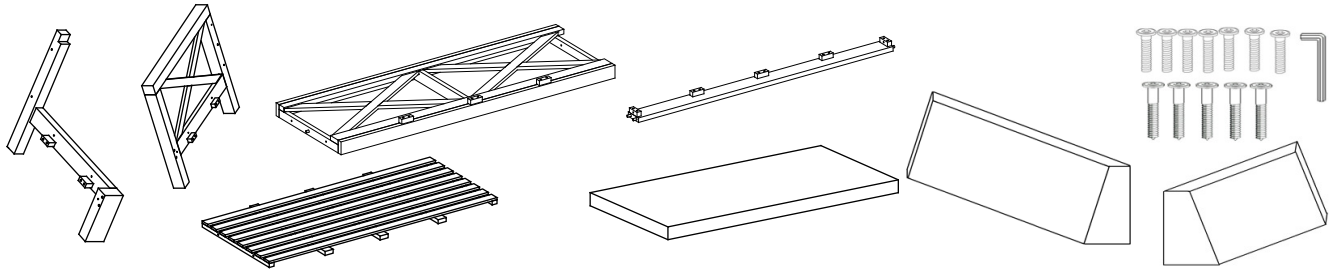

☒	Read instructions, cover to cover.
☒	Have 2 adults on hand for assembly.
☒	Do not assemble on flooring or carpet.
☒	Assemble on a clean non-marring surface (packing foam).
☒	Save all packaging until finished.

Assembly Steps

OVERVIEW

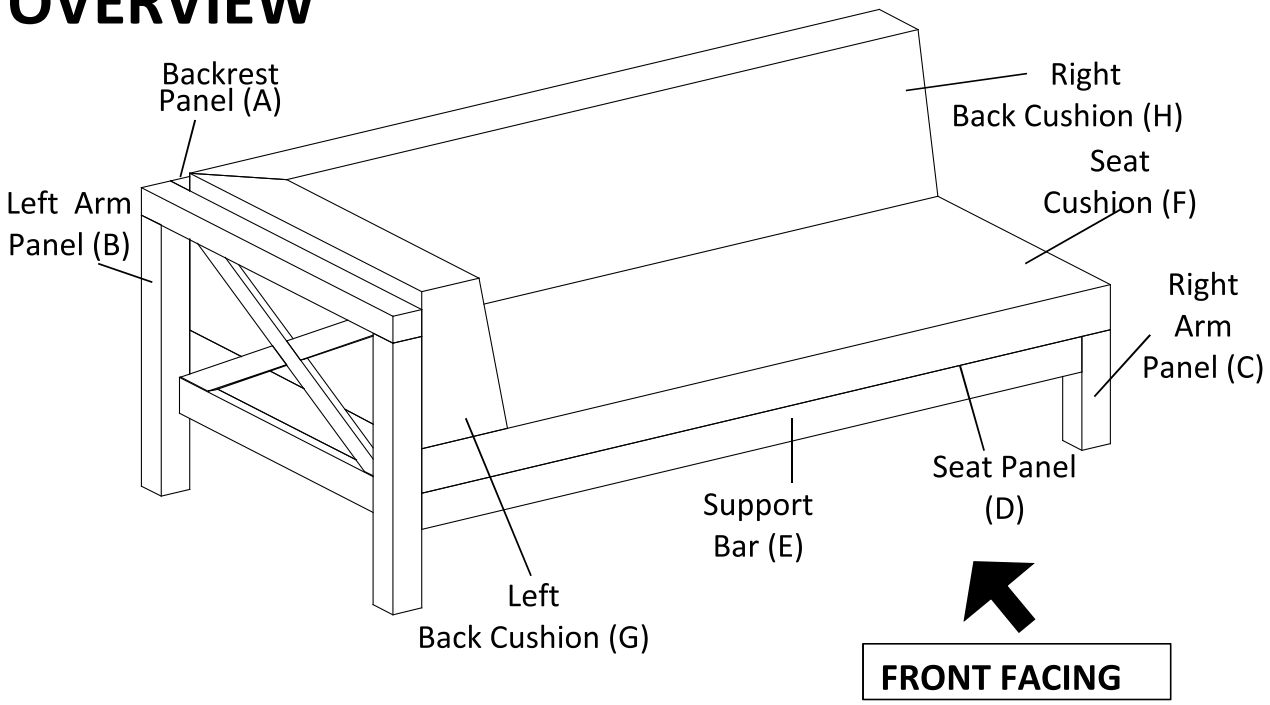

This Left Chair has multiple parts and may require up to 30 minutes to assemble. To give you an overview of the Left Chair parts, the above picture is to help you put the various parts into perspective. Please read through the instructions herebelow to familiarise the parts and steps before assembly.

Step 1

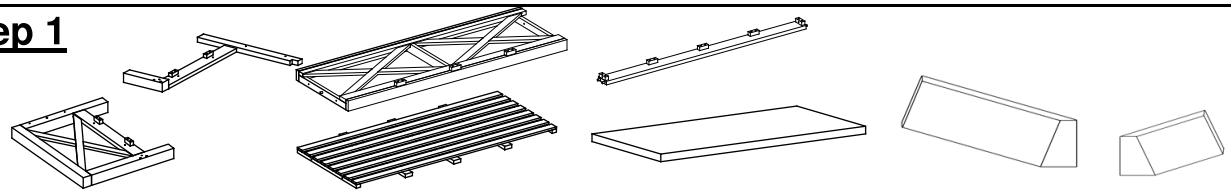

Unpack and place all parts on a clean, non-marring surface.

Step 2

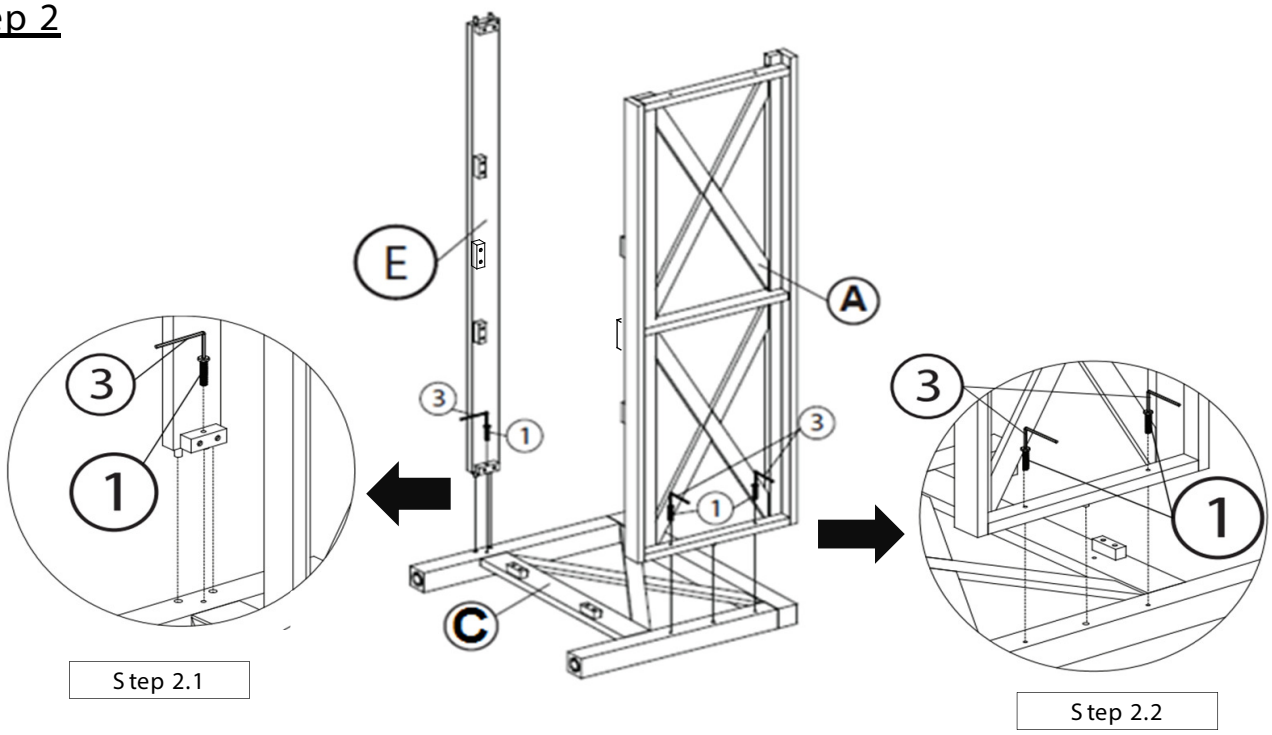

Place the Left Arm Panel (C) with inside face skywards onto a clean, soft surface to avoid any scratches or damages to the product.
Step 2.1: Align the dowels of Support Bar (E) into the positions in the Left Arm Panel (C).
Then, affix Support Bar (E) with Left Arm Panel (C) by using Bolt (①) and Allen Key (③)..
Step 2.2: Attach the Backrest Panel (A) onto Left Arm Panel (C) by using Bolts (①) and Allen Key (③).
DO NOT FULLY TIGHTHEN BOLTS.

Step 3

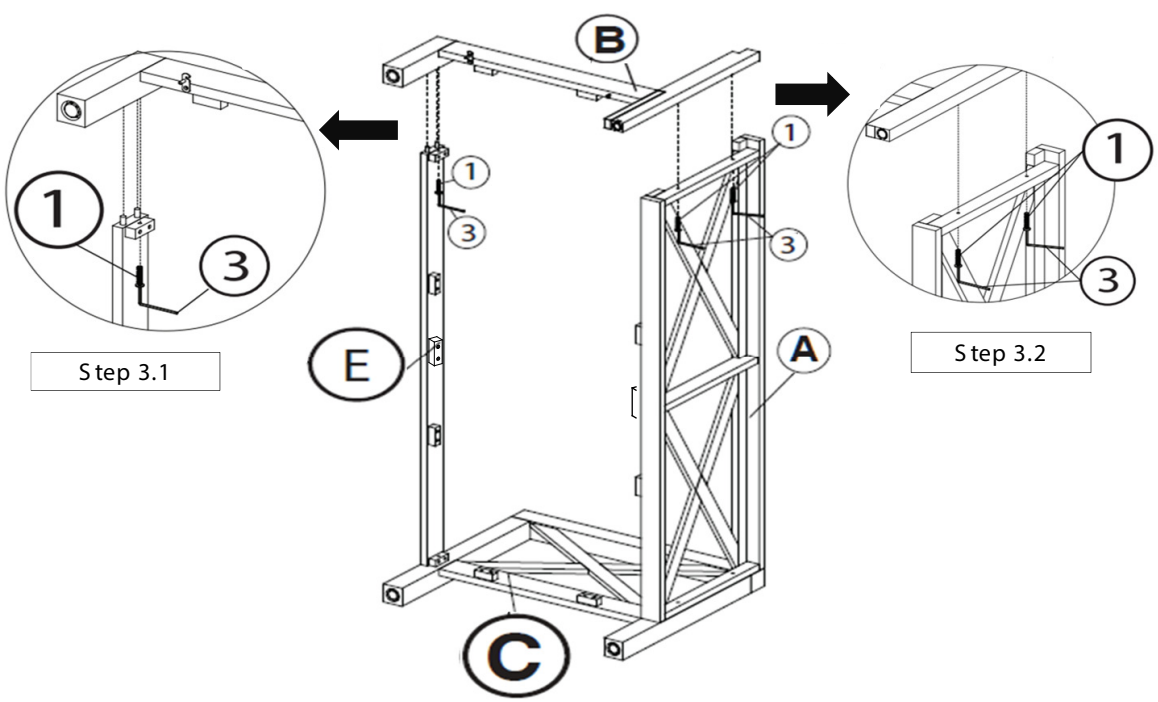

Place Right Arm Panel (B) onto the assembled frame from Step 2
Step 3.1: Align the dowels of Support Bar (E) into the positions in the Right Arm Panel (B).
Then, affix Support Bar (E) with Right Arm Panel (C) by using Bolt (①) and Allen Key (③).
Step 3.2: Attach the Right Arm Panel (B) onto Backrest Panel (A) by using Bolts (①) and Allen Key (③).
DO NOT FULLY TIGHTHEN BOLTS.

Step 4

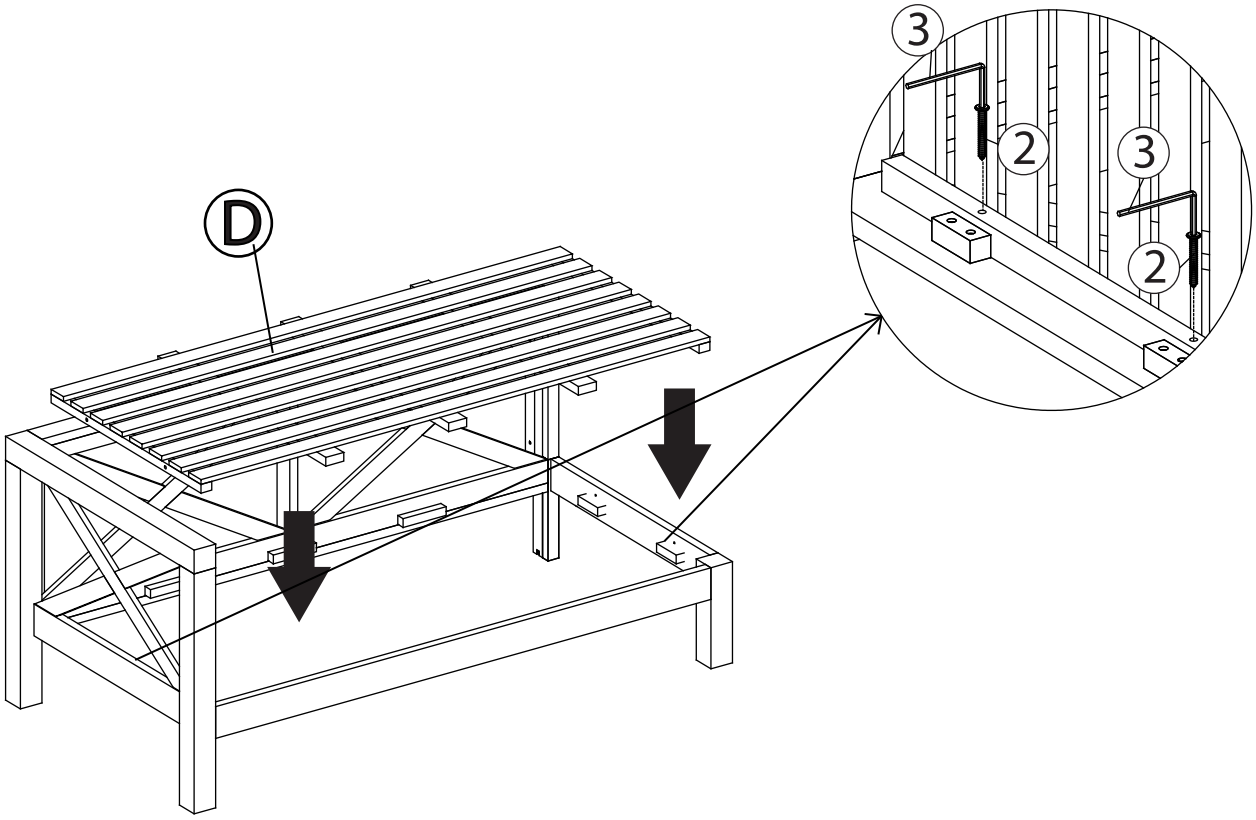

Attach the Seat Panel (D) into the Left Chair as shown in picture above.
Affix Seat Panel (D) with Left Chair by using Screws (②) and Allen Key (③).
Note: Using Screws (②) from inside to outside of Seat Panel (D)
DO NOT FULLY TIGHTHEN SCREWS.

Step 5

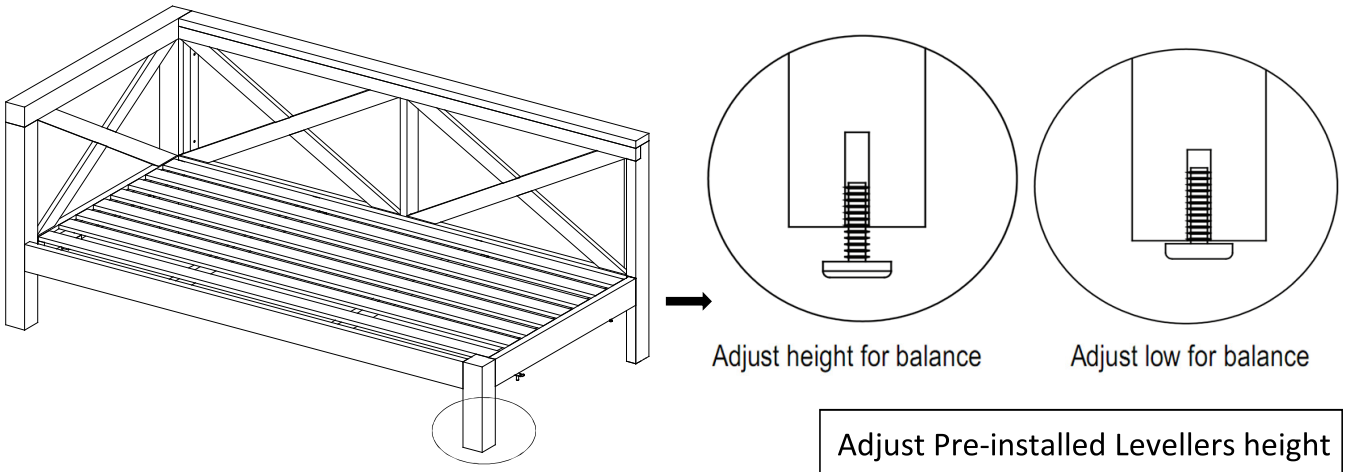

Adjust Pre-installed Levellers height for balance

Inspect the Left Chair and make sure all parts are adequately connected.
In a sequential manner, tighten all Screws and Bolts at all joints.
With assistance from your adult partners, adjust the Levellers to desired height to avoid wobbles.

Step 6

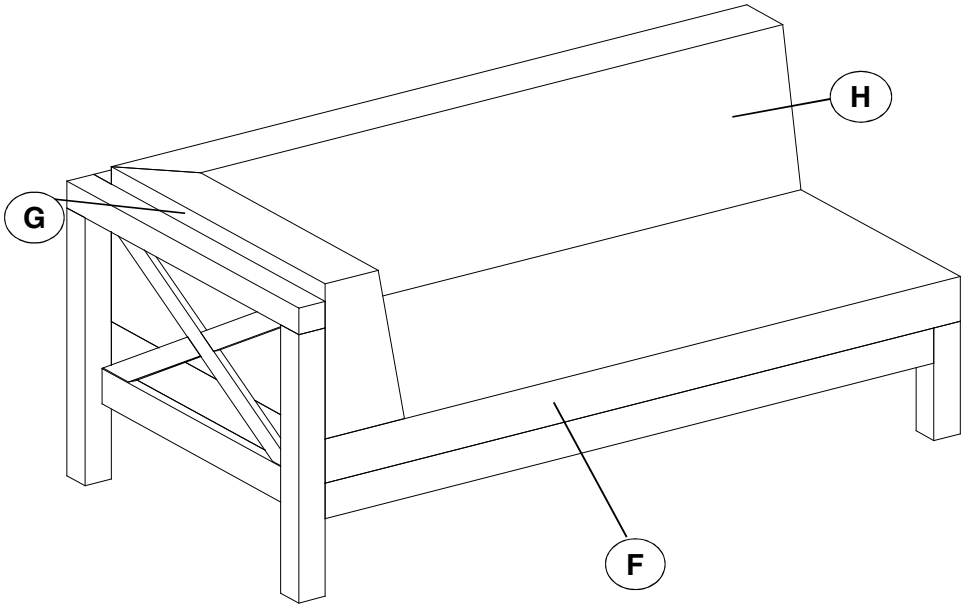

Turn the Left Chair right side up.
Place Seat Cushion (F), Left Back Cushion (G) and Right Back Cushion (H) to Seat Panel (D).
Inspect it and make sure all parts are adequately connected.
Ensure all screws, bolts are fully locked into position and secured.
The Left Chair is ready to be used.
Caution: This Left Chair can only be used on a flat, level surface.

Step 7

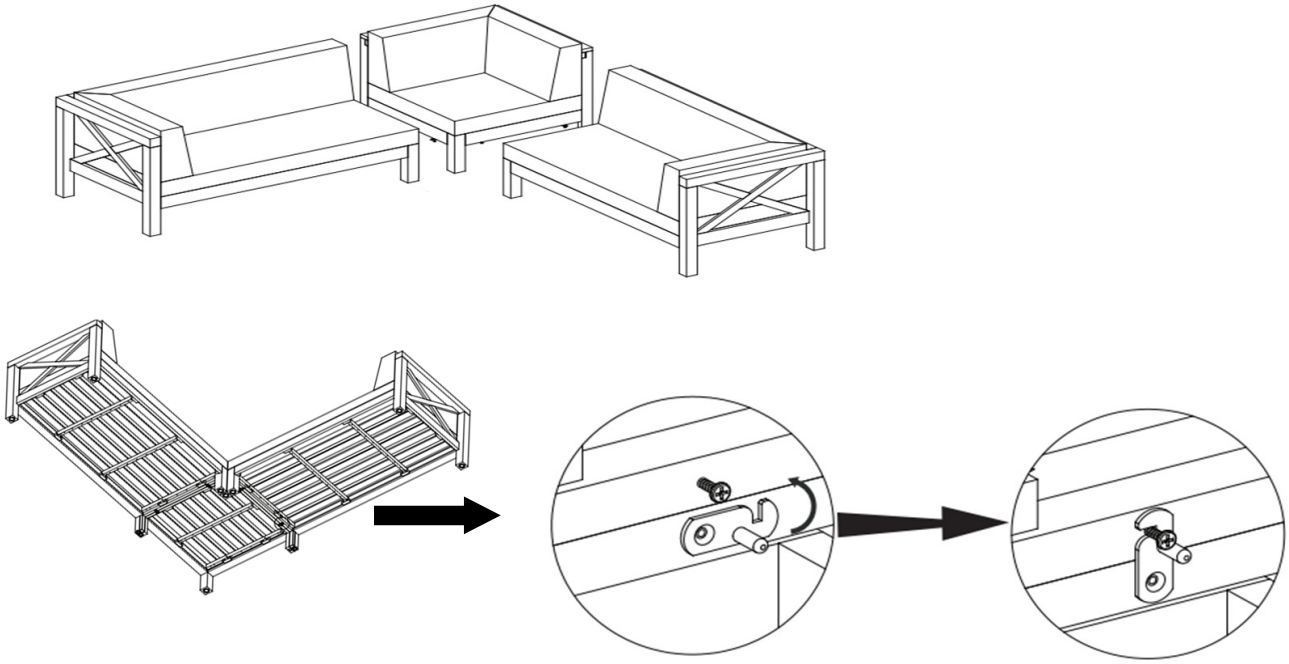

Note: This is optional step in case you want to connect all chairs in a set together and should be done before placing cushion
With assistance from your adult partners, up side down the chairs and using pre-fixed clip to connect the chairs together

Care & Maintenance

- Do not put hot items directly on furniture surface
- Do not clean furniture with harsh cleansers or polish.
- To obtain the longest lifespan of your outdoor prodcts, minimizing exposure to direct sunlight is recommended.
- Children should not climb or jump on the furniture.
- Do not write on furniture without a padded barrier to protect the surface.
- To obtain the longest lifespan of your outdoor products, avoid extended and lengthy exposure to rain, snow, and direct sunshine. Whenever possible cover the product and /or place under patio or awnings.
- Not for commercial use. For residential use only .
- Stains may be removed with mild soap solution and damp cloth.

- Dust and pick-up spills using a clean, non-colored, lint-free cloth .