WARNING!!

Children have died from furniture tipover. Tip restraints have been included with this product; you must install the tip restraints according to these instructions in order to minimize the risk of furniture tipping.

NEVER allow children to climb or hang on furniture, including drawers or cabinet doors.

In addition to installing the restraints， to help prevent tip-over

1. NEVER put a TV or other heavy objects on top of this product".
2. Do not stand on the product

⚠ WARNING





Children have died from furniture tipover.To reduce the risk of furniture tipover:

-ALWAYS install anti-tip device provided.
-NEVER put a TV on this product.
-NEVER allow children to stand, climb, or hang on any drawers, doors, or shelves.
-NEVER open more than one drawer at a time.
-Place heaviest items in the lowest drawers.

This is a permanent label.
Do not remove!

Assembly Instructions

Caution : You must read this before you proceed

Care & Maintenance



- Not for commercial use. For residential use only.



- Furniture may scratch floors. We recommend using furniture pads to protect your floors.



- Do not put hot items directly on furniture surface.



- Do not clean furniture with harsh cleansers or polish.



- Do not place furniture under direct sunlight.



- Do not place furniture near heating or cooling vents.



- Do not write on furniture without a padded barrier to protect the surface.



- Do not place furniture outside . For indoor use only.



- Stains may be removed with mild soap solution and damp cloth.



- Children should not climb or jump on the furniture.



- Dust and pick-up spills using a clean, non-colored, lint-free cloth.

Please look in carton for hardware packs and legs.

Console Table
N779P537517

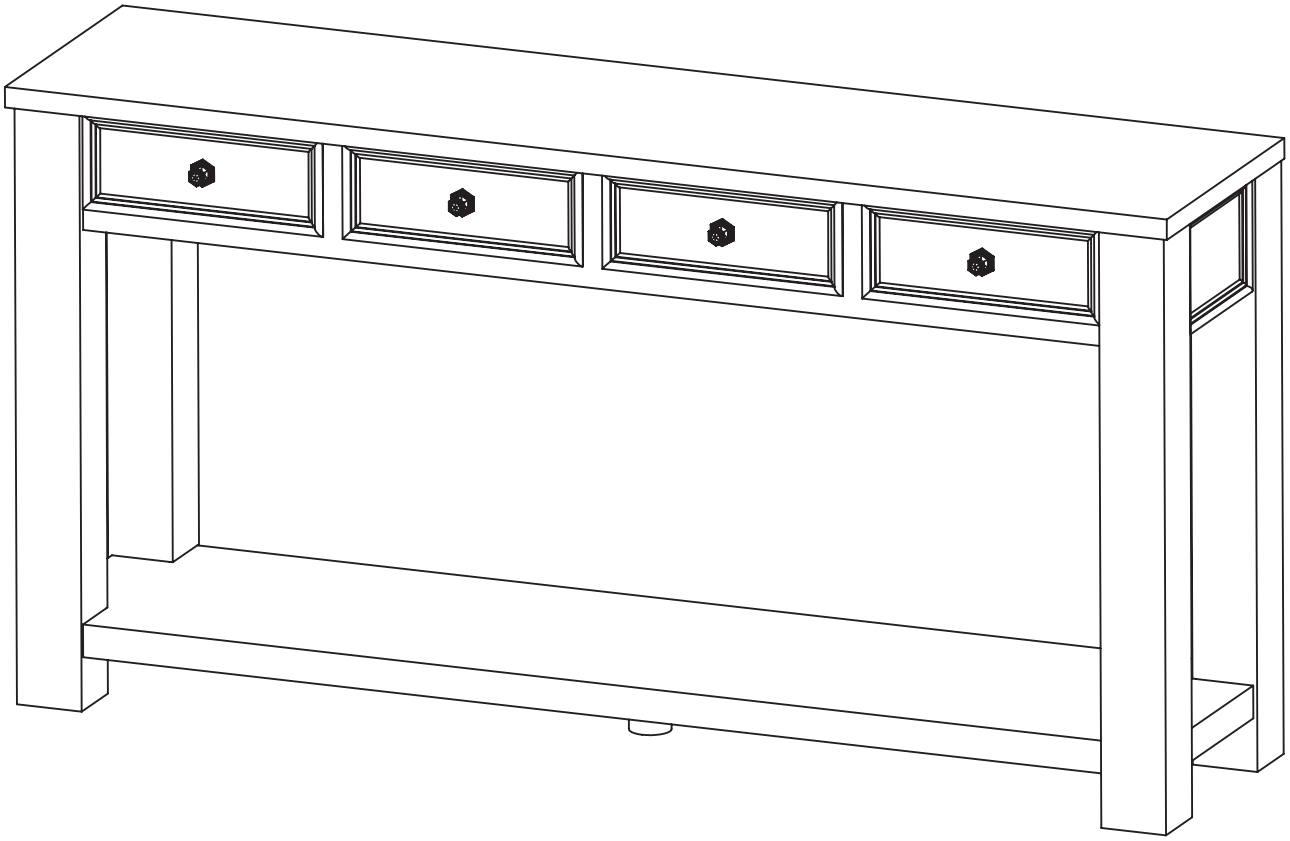

Parts List

Label	Picture	Description	QTY
A	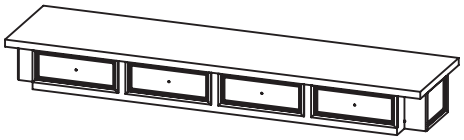	Top Panel	1
B	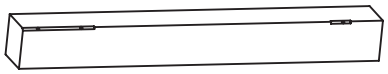	Leg	4
C		Bottom Panel	1
D		Leg	1

Hardware

Label	Picture	Description	QTY
①	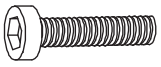	Bolt (M6*40mm)	12+1
②		Flat Washer	12+1
③		L-type Hexagon Wrench	1
Restraint Device Hardware			
④		Anti-Tipping Iron Sheet	2
⑤		Nut	2
⑥		Screw Ø4*14mm	2
⑦		Screw Ø4*35mm	2

Assembly Preparation

Before Beginning Assembly:

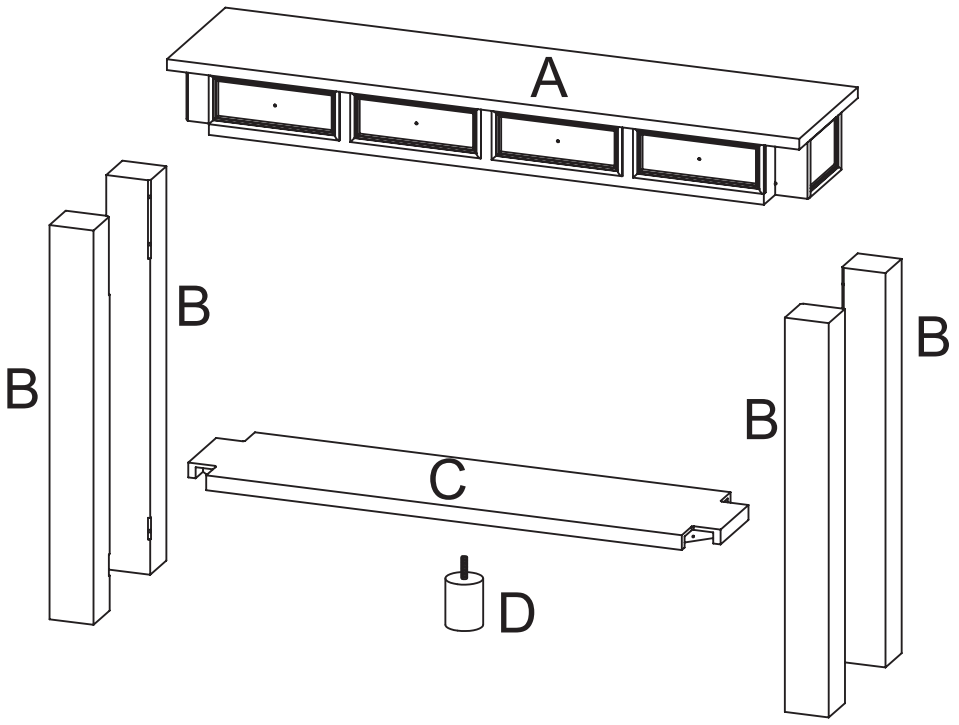

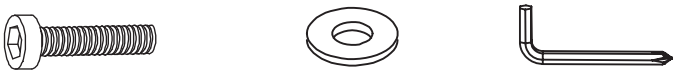

①x12 ②x12 ③x1



④x2 ⑤x2 ⑥x2 ⑦x2

- Read instructions,cover to cover-
- Have 2 adults on hand for assembly-
- Do not assemble on flooring or carpet-
- Assemble on a clean non-marring surface (packing foam)-
- Save all packaging until finished-

Assembly Steps

Overview

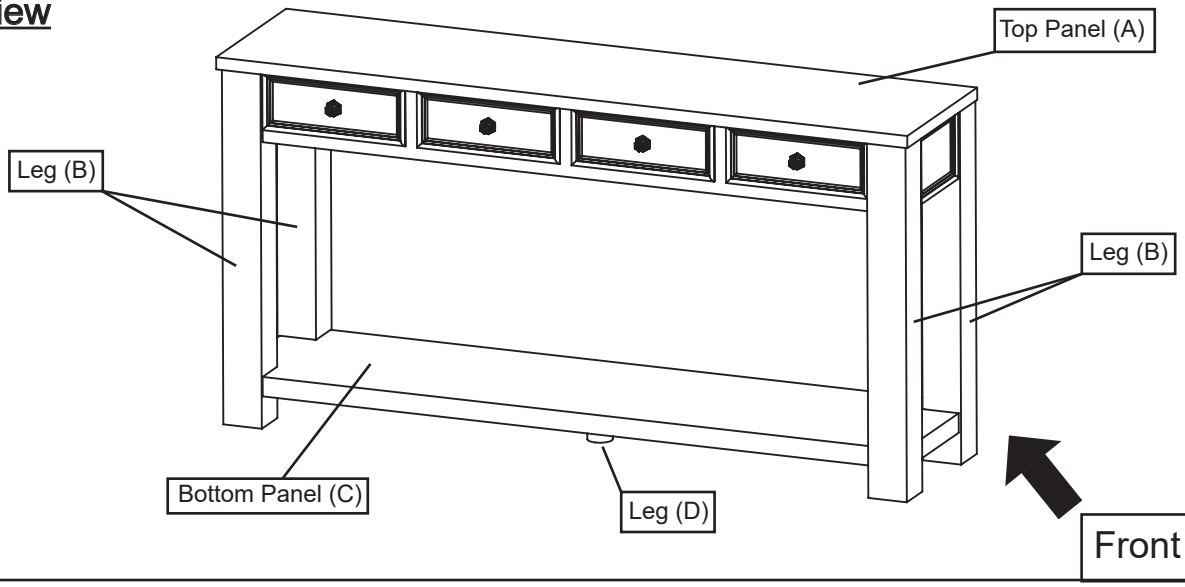

This Console Table has multiple parts and may require up to 30 minutes to assemble. To give you an overview of the Console Table parts, the above picture is to help you put the various parts into perspective. Please read through the instructions below to familiarise yourself with the parts and steps before assembly.

Step 1

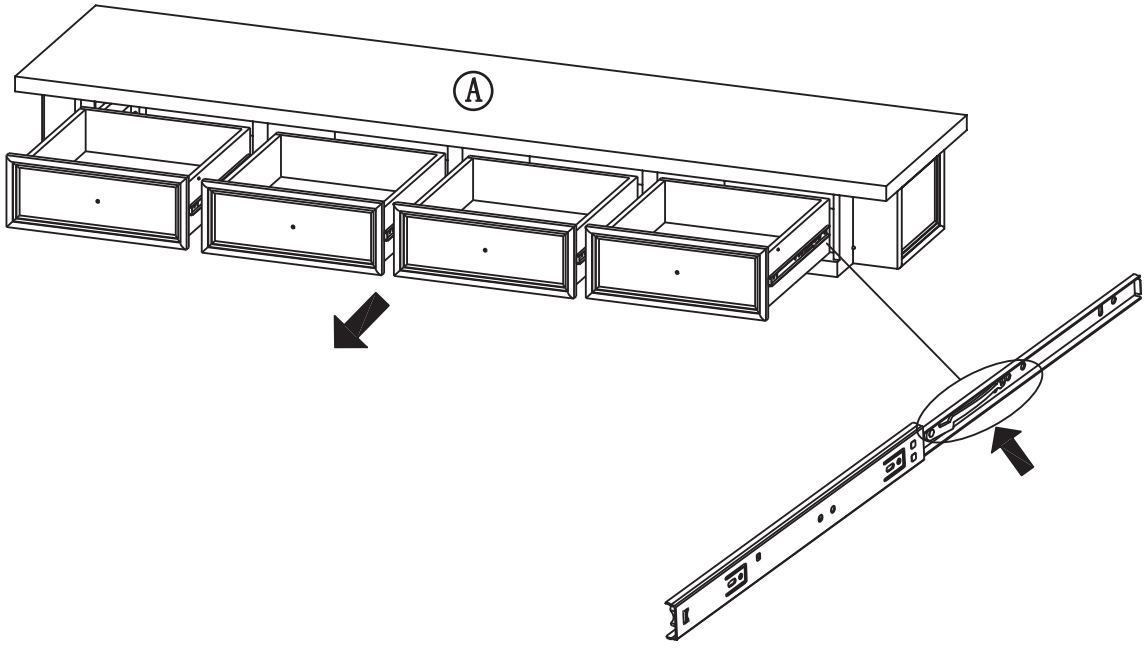

To remove the drawer, you need to press the slide rail latch.
Take the drawer from the top panel (A).

Step 2

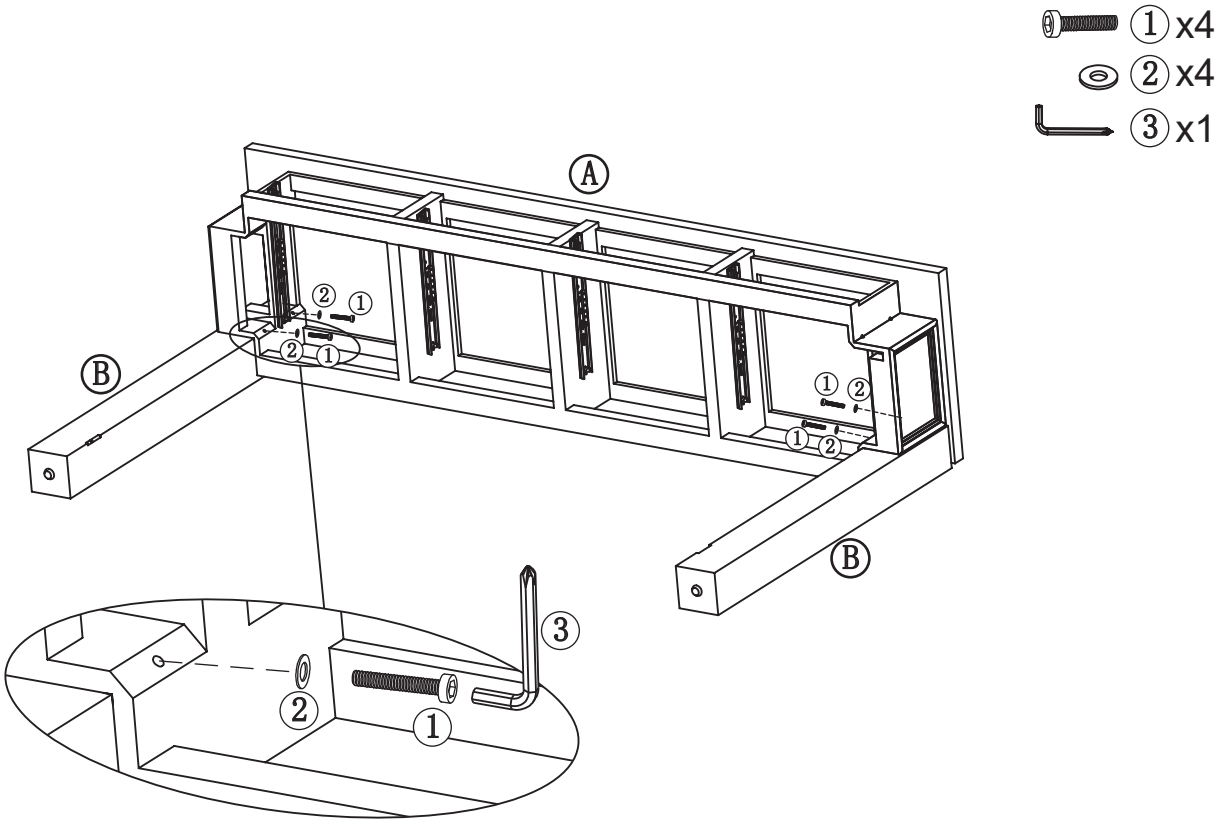

Attach the Top Panel(A) to the Leg(B) with Bolt(①) and Flat Washer(②) using L-type Hexagon Wrench(③)

Step 3

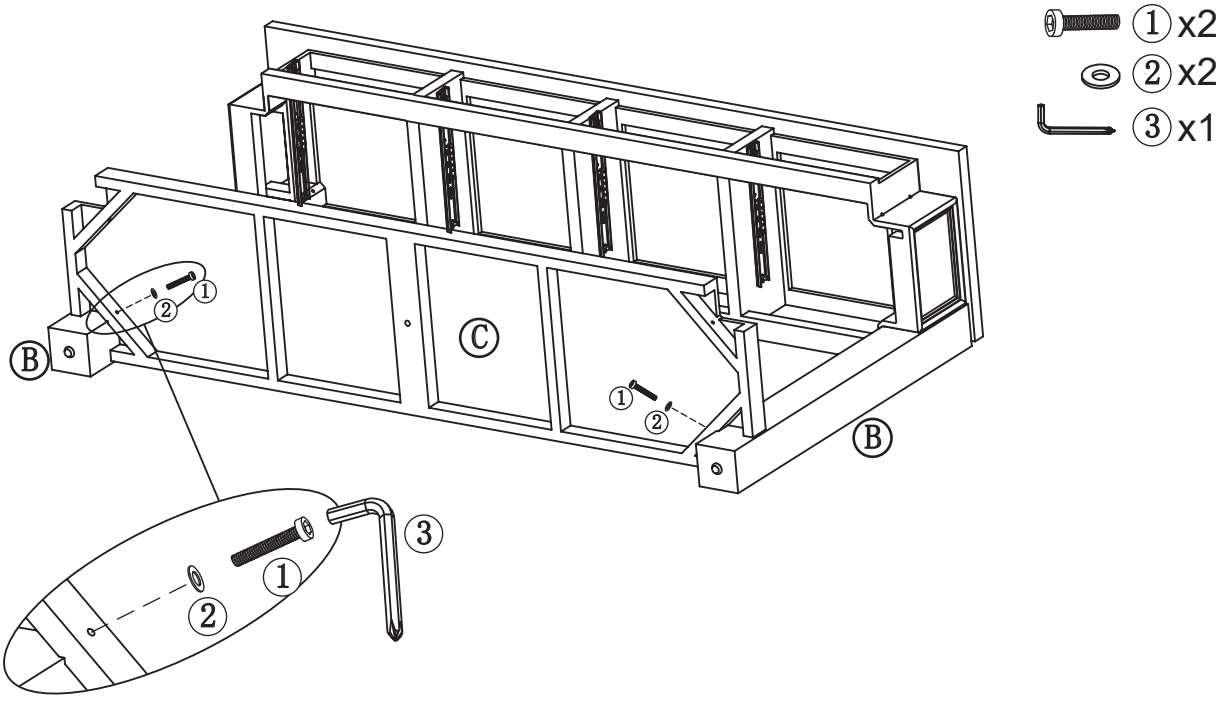

Attach the Leg(B) to the Bottom Panel(C) with Bolt(①) and Flat Washer(②) using L-type Hexagon Wrench(③)

Step 4

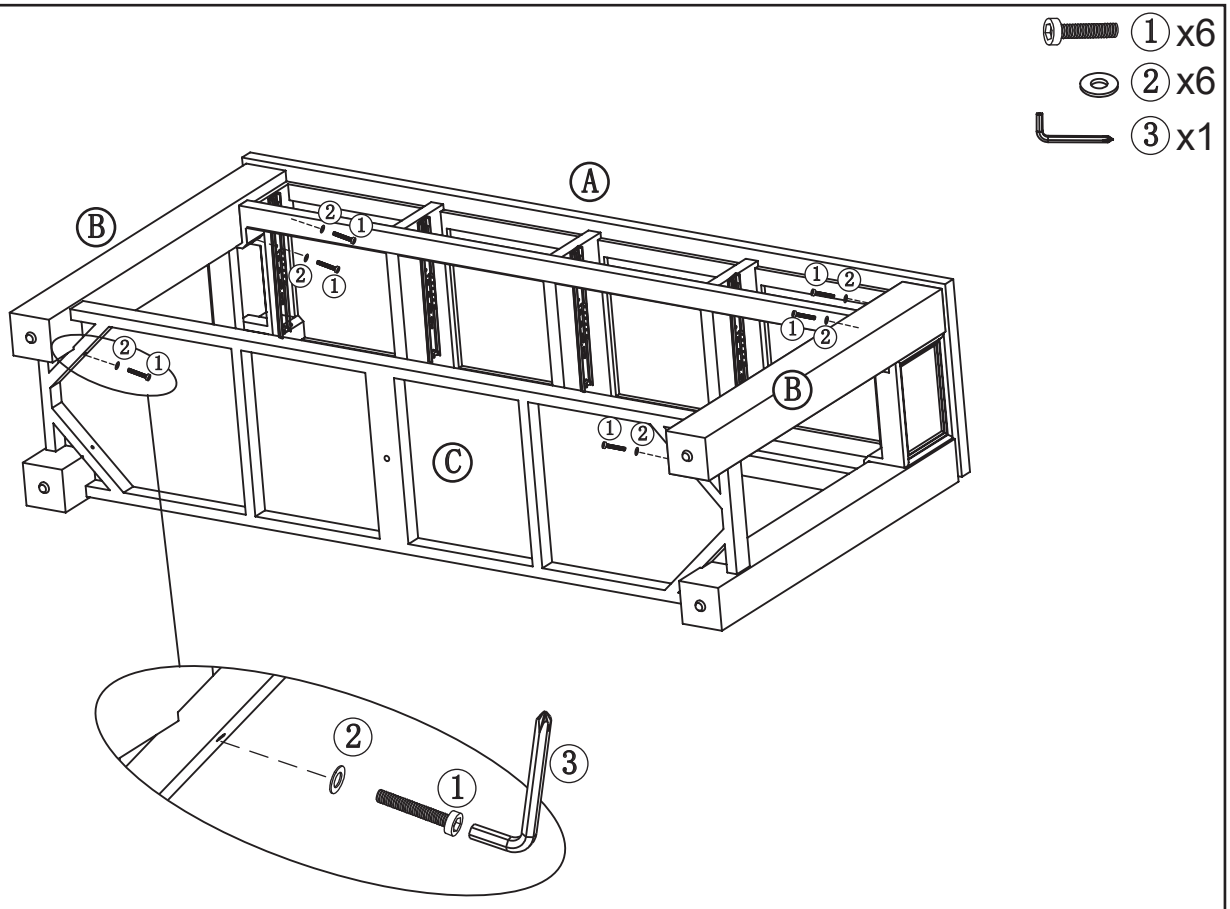

Attach the Leg(B) to the Top Panel(A) and the Bottom Panel(C) with Bolt(①) and Flat Washer(②) using L-type Hexagon Wrench(③)

Step 5

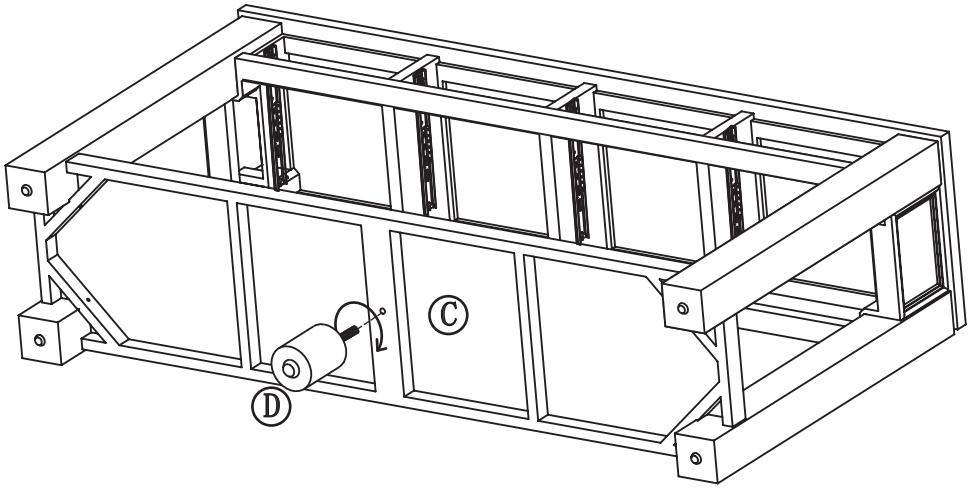

Please install the Leg (D) to the Bottom Panel (C).

Step 6

③x1

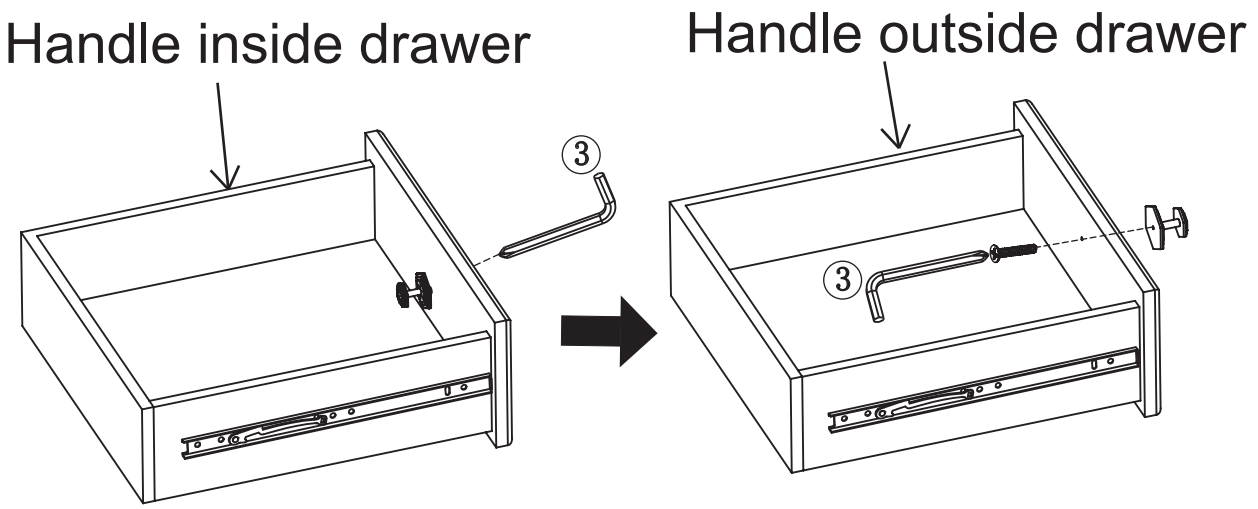

The Handle is inside the drawer.
First unscrew the Handle and Screw using L-type Hexagon Wrench (③).
Then lock the Handle outside the drawer with Screw using L-type Hexagon Wrench (③).

Step 7

④x2
⑤x2
⑥x2
⑦x2
③x1

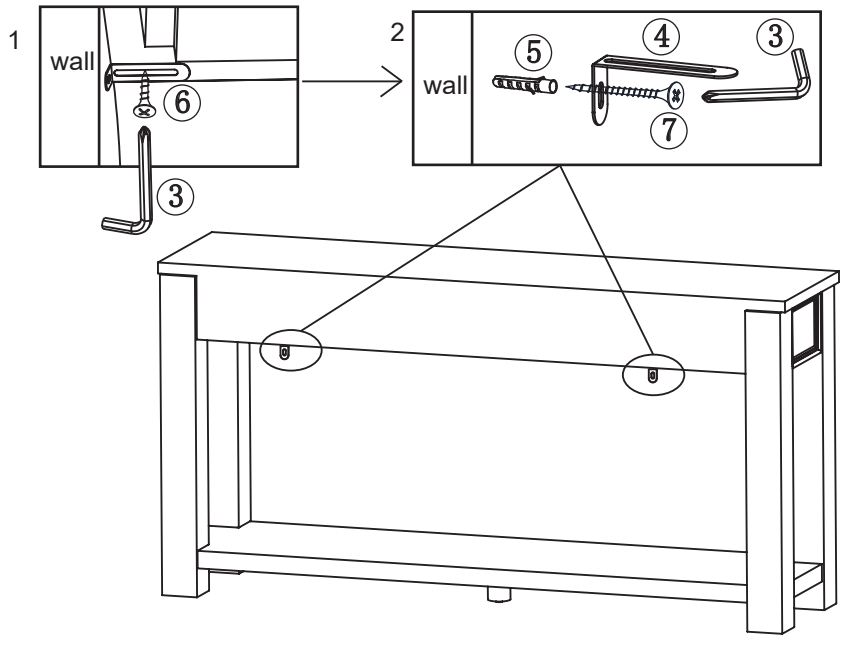

Screw the Nut (⑤) into the wall. Using the long side of Anti-tipping iron sheet (④) connected to the Top Panel(A) with screw(⑥)using L-type Hexagon Wrench(③),then install the short side of Anti-tipping iron sheet (④) on the wall with Screw(⑦) using L-type Hexagon Wrench(③).

Step 8

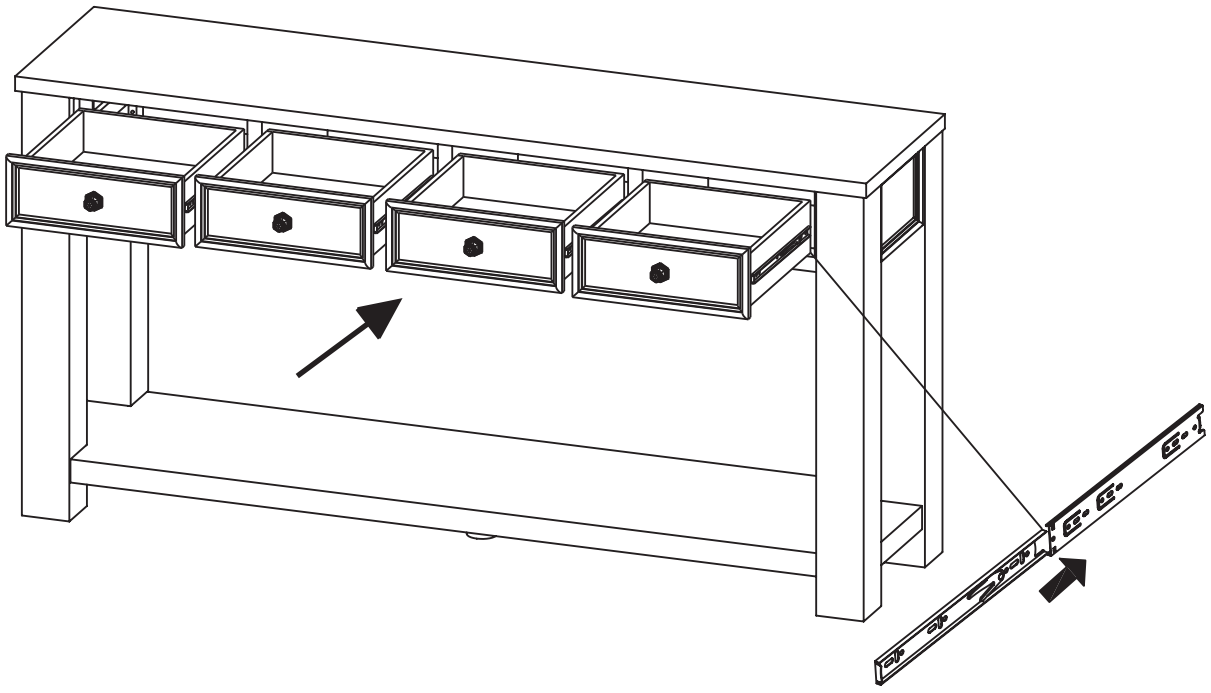

Please put the drawer in the Top Panel(A).

Step 9

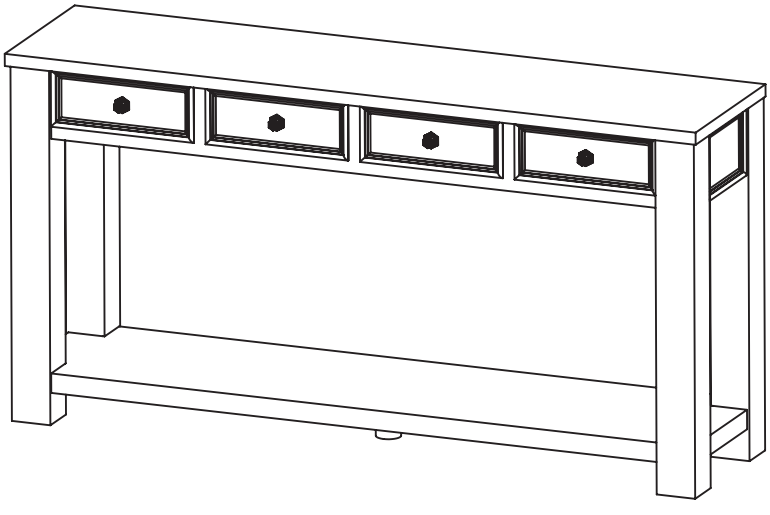

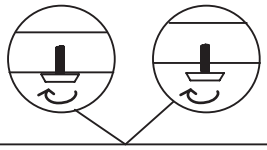

Adjust Pre-installed Levelers height to achieve balance.

You table is ready for use.

Questions & Answers about Proposition 65

• What is Proposition 65?

Proposition 65 requires businesses to provide warnings to Californians about significant exposures to chemicals that cause cancer, birth defects or other reproductive harm. These chemicals can be in the products that Californians purchase, in their homes or workplaces, or that are released into the environment. By requiring that this information be provided, Proposition 65 enables Californians to make informed decisions about their exposures to these chemicals. Proposition 65 also prohibits California businesses from knowingly discharging significant amounts of listed chemicals into sources of drinking water. Proposition 65 requires California to publish a list of chemicals known to cause cancer, birth defects or other reproductive harm. This list, which must be updated at least once a year, has grown to include approximately 900 chemicals since it was first published in 1987. • What types of chemicals are on the Proposition 65 list?

The list contains a wide range of naturally occurring and synthetic chemicals that include additives or ingredients in pesticides, common household products, food, drugs, dyes, or solvents. Listed chemicals may also be used in manufacturing and construction, or they may be byproducts of chemical processes, such as motor vehicle exhaust.

• What does a warning mean?

If a warning is placed on a product label or posted or distributed at a workplace, a business, or in rental housing, the business issuing the warning is aware or believes that it is exposing individuals to one or more listed chemicals. By law, a warning must be given for listed chemicals unless the exposure is low enough to pose no significant risk of cancer or is significantly below levels observed to cause birth defects or other reproductive harm.

• Where can I get more information on Proposition 65?

If you have specific questions on the administration or implementation of Proposition 65, you can contact OEHHA's Proposition 65 program at P65.Questions@oehha.ca.gov, or by phone at (916) 445-6900.