furniturebox

VIENNE

Large TV Unit

Assembly Guide

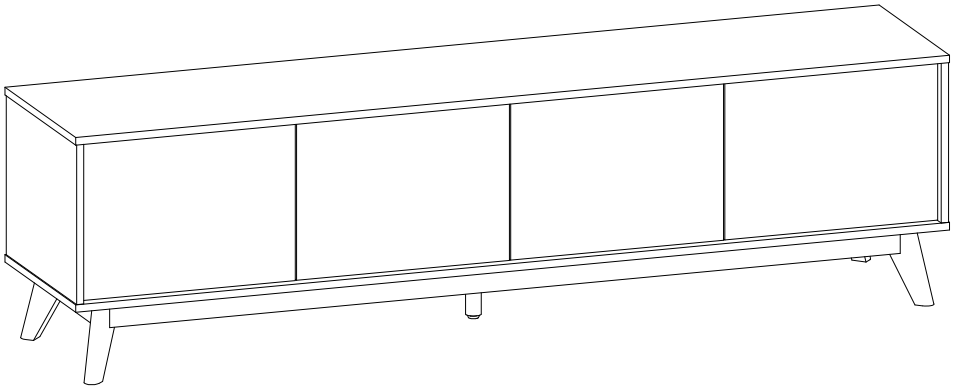

EasyBuild Design, powered by ovvo. Less assembling, more living.

furniturebox

IMPORTANT: please read these instructions fully before starting assembly



SAFETY AND CARE ADVICE



NO POWER TOOLS

- Check you have all the components and tools listed
- Remove all fittings from their bags and separate into groups
- We do not recommend use of power tools - this could damage the unit. Only use hand screwdrivers and Allen keys
- Keep children and animals away from the work area, small parts could cause choking if swallowed
- Make sure you have enough space to lay out the parts before starting
- Assemble the item as close to its final position (same room) as possible
- Do not over tighten the nuts to avoid damage to the threads
- Only clean using a damp cloth and mild detergent. Do not use bleach or abrasive cleaners
- Do not allow children to climb or play on this product From time to time, check there are no loose screws in this unit
- This product should not be discarded with household waste. Take to your local authority waste disposal centre
- Unless otherwise stated, this product is designed for domestic use and is not certified for commercial or contract settings

furniturebox

IMPORTANT INFORMATION



60 Minute Build



Two Person Build



Max Weight Capacity 40kg

Note: Assembly estimates are approximate and can differ based on the specific environment and user experience.

furniturebox

WHAT'S IN THE BOX

Note: the quantities are the correct amount to complete the assembly. In some cases more fixings may be supplied than are required.

Getting to know your product:

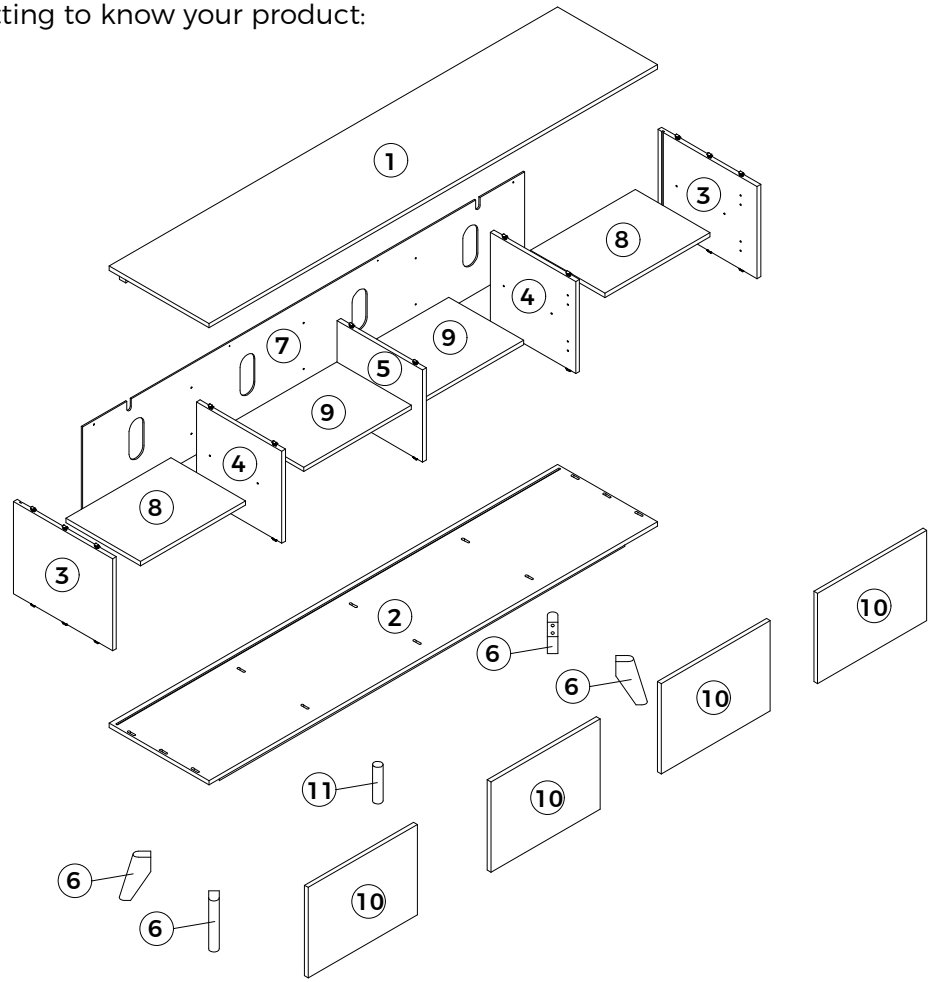

furniturebox

WHAT'S IN THE BOX

Note: the quantities are the correct amount to complete the assembly. In some cases more fixings may be supplied than are required.

Parts Key:

Label	Part Name	Image / Drawing	Quantity
1	Top Panel	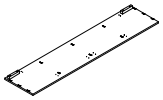	1
2	Bottom Panel	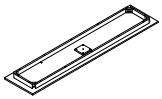	1
3	Side Panel		2
4	Side Divider Panel		2
5	Middle Divider Panel		1
6	Leg		4
7	Back Panel	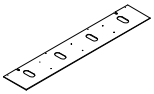	1
8	Side Shelf	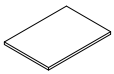	2

Label	Part Name	Image / Drawing	Quantity
9	Middle Shelf	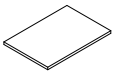	2
10	Door	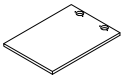	4
11	Middle Leg		1

furniturebox

WHAT'S IN THE BOX

Note: the quantities are the correct amount to complete the assembly. In some cases more fixings may be supplied than are required.

Hardware Key:

Label	Hardware Description	Image / Drawing	Size(mm)	Quantity
A	Bolt		M6x45mm	8
B	Washer		M6x16mm	8
C	Spring Washer		M6x10mm	8
D	Allen Key		M4	1
H	Felt Pad		⌀25x5mm	4
J	L-Bracket	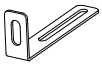	80x30x15mm	2
K	Screw		⌀4x14mm	4
L	Wedge		14x13x10mm	6
M	Screw		⌀3x19mm	14
N	Hinge	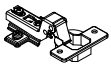		8
P	Screw		⌀4x15mm	16
Q	Shelf Pin		⌀6.5x16mm	16

furniturebox

WHAT'S IN THE BOX

Note: the quantities are the correct amount to complete the assembly. In some cases more fixings may be supplied than are required.

Hardware Key:

Label	Hardware Description	Image / Drawing	Size(mm)	Quantity
R	Push-Open			4
S	Screw		ø3.5x12mm	8

furniturebox

Note:

- Use a clear, flat surface to avoid bumps or scratches before assembling.
- Insert all fixings loosely at first to allow for alignment; only tighten them once everything is properly positioned, as some adjustment may be required.
- Avoid over-tightening, as this may damage the parts.
- Seek assistance when moving large or heavy parts

Fitting Assembly Instructions

Assembly

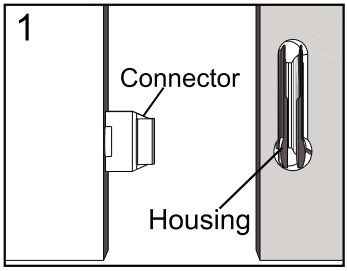

Push connector into housing to join.

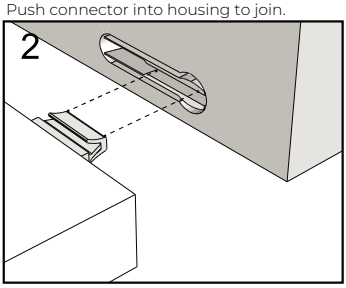

Make sure there is no gap between the panels.

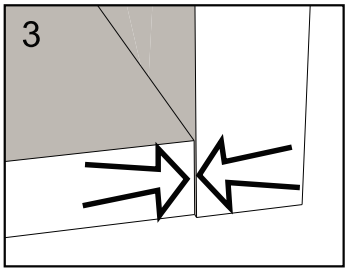

Disassembly

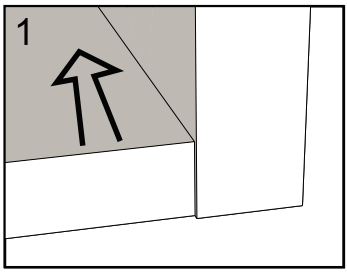

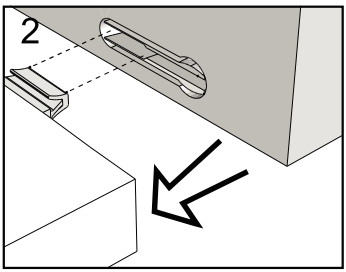

furniturebox

STEP 1

Attach 4 x Legs [6] to Bottom panel [2] using 8 x bolts [A], 8 x washers [B] and 8 x spring washers [C] with Allen key [D] as shown. Screw Middle leg [11] to bottom panel [2] as shown.

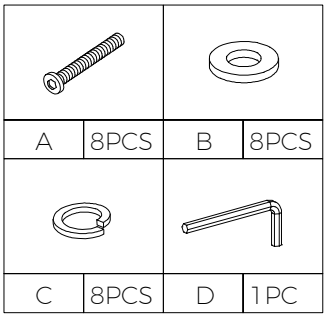

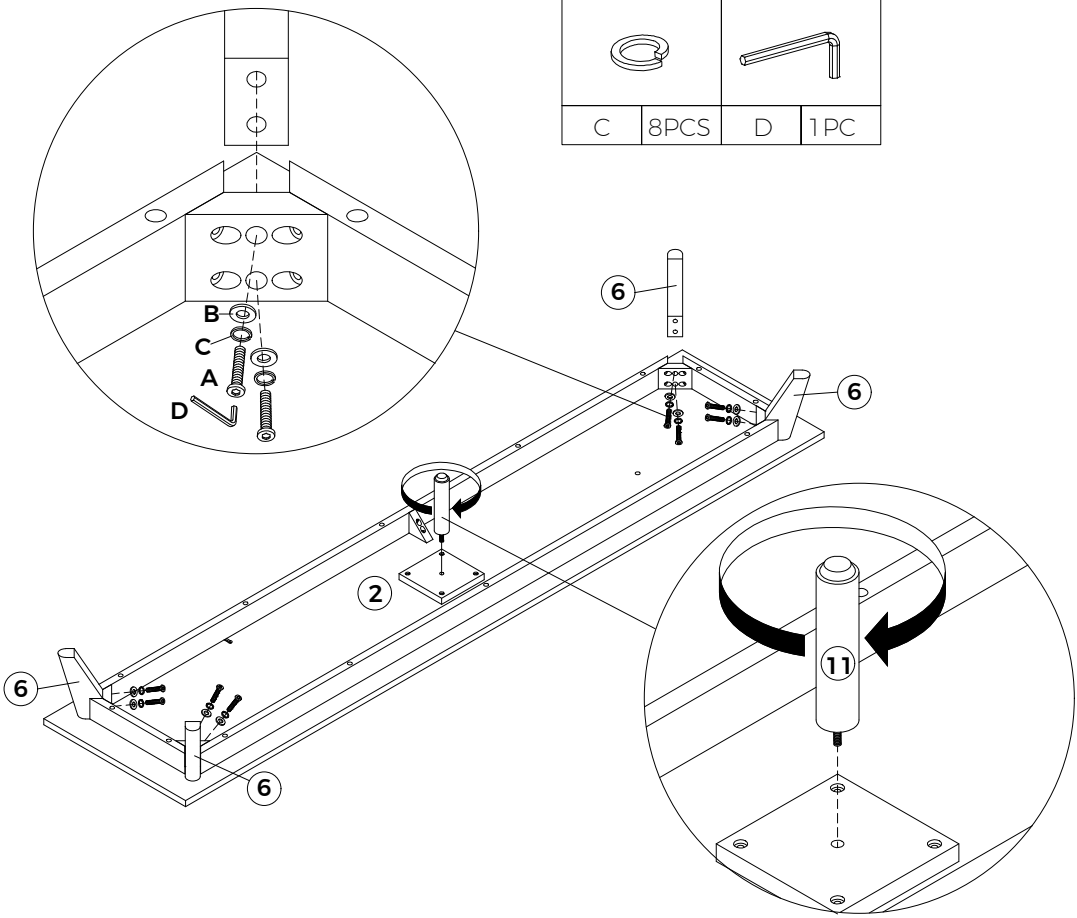

furniturebox

STEP 2

Attach 4 x felt pads [H] to 4 x legs [6] as shown.

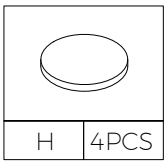

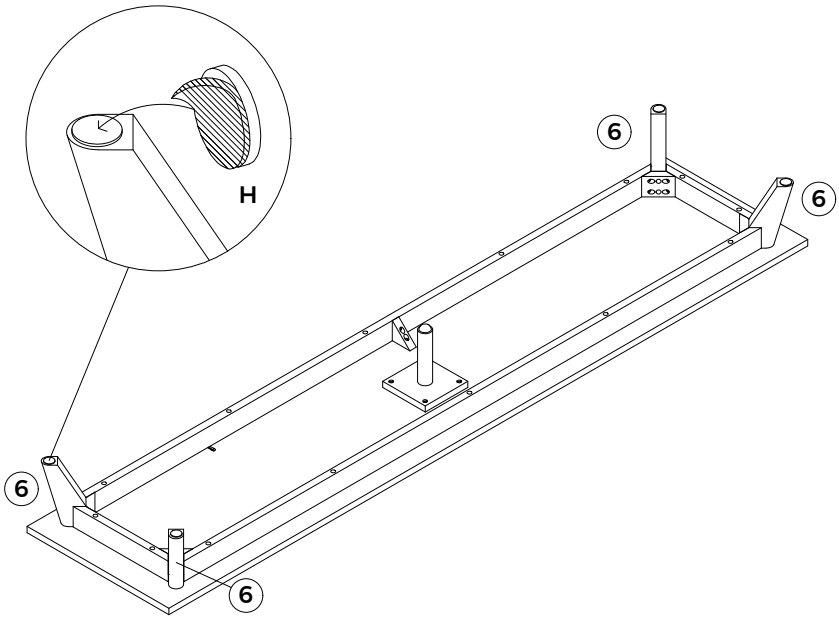

furniturebox

STEP 3

Attach 2 x L-brackets [J] to Top panel [1] with 4 x screws [K] using a Phillips head screwdriver.
Attach 4 x Push-open [R] to Top panel [1] using 8 x screws [S] with a Phillips Head Screwdriver.

✓	✗	✗
ø3.5x12	ø4x15	ø3x19

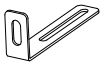			
J	2PCS	K	4PCS
			
R	4PCS	S	8PCS

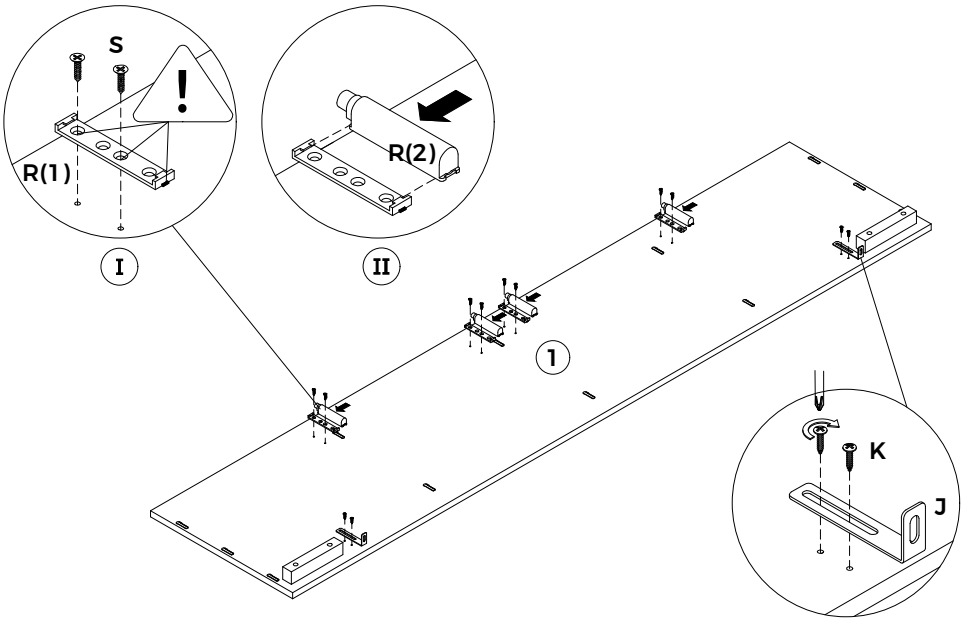

furniturebox

STEP 4

Insert 2 x Side panels [3], 2 x Side divider panels [4] and Middle divider panel [5] to bottom panel [2] as shown.

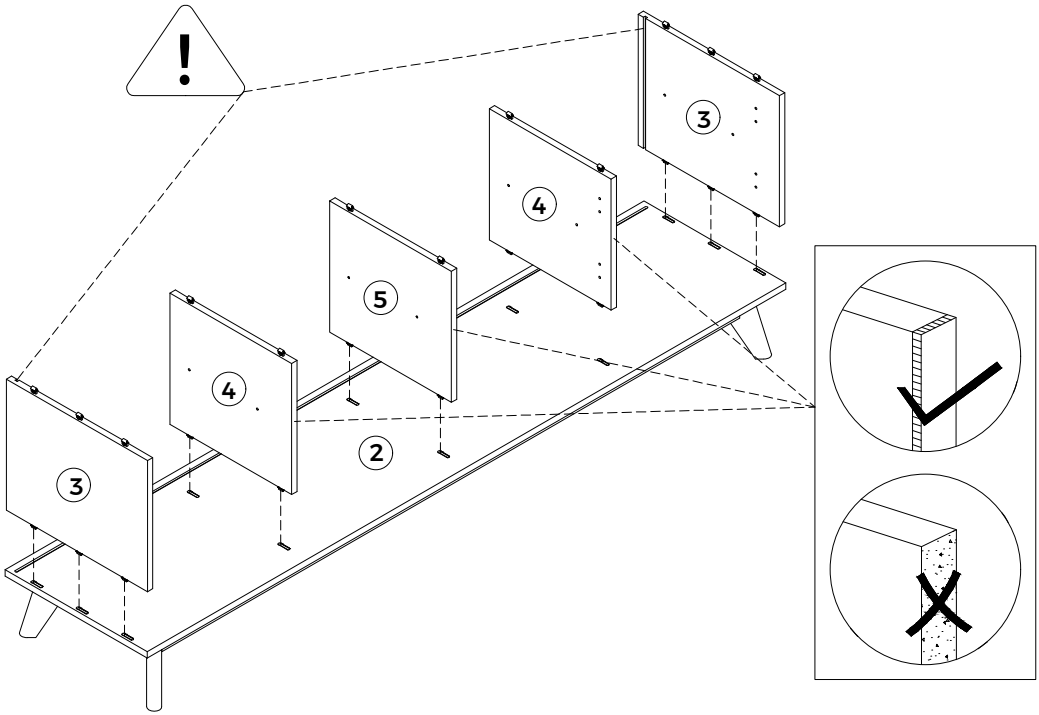

STEP 5

Slot in back panel [7] into the grooves on Side panels [3] and Bottom panel [2] as shown.
Ensure Back panel [7] is fully slotted into the grooves.

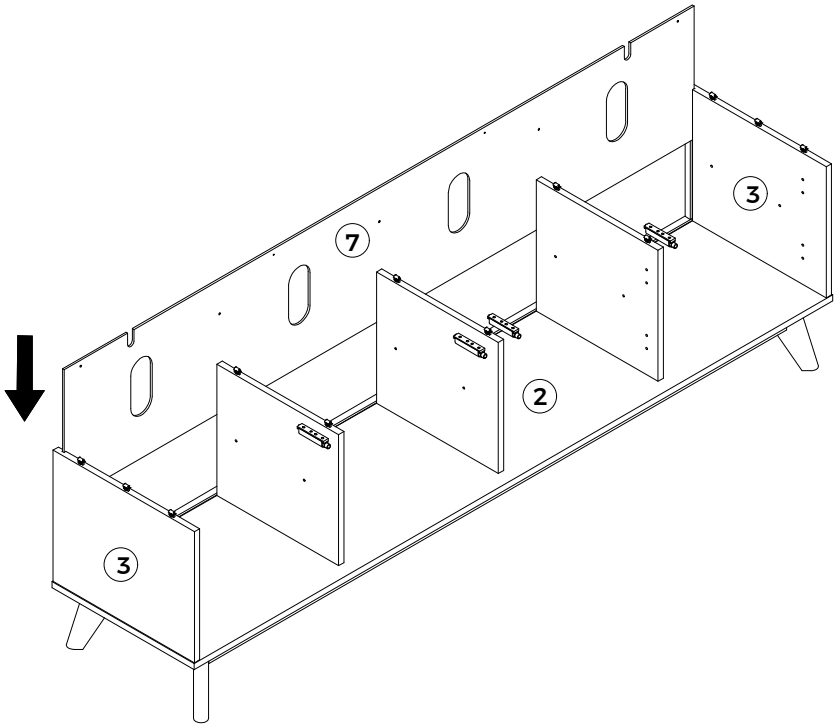

furniturebox

STEP 6

Attach Top panel [1] to assembled frame as shown.

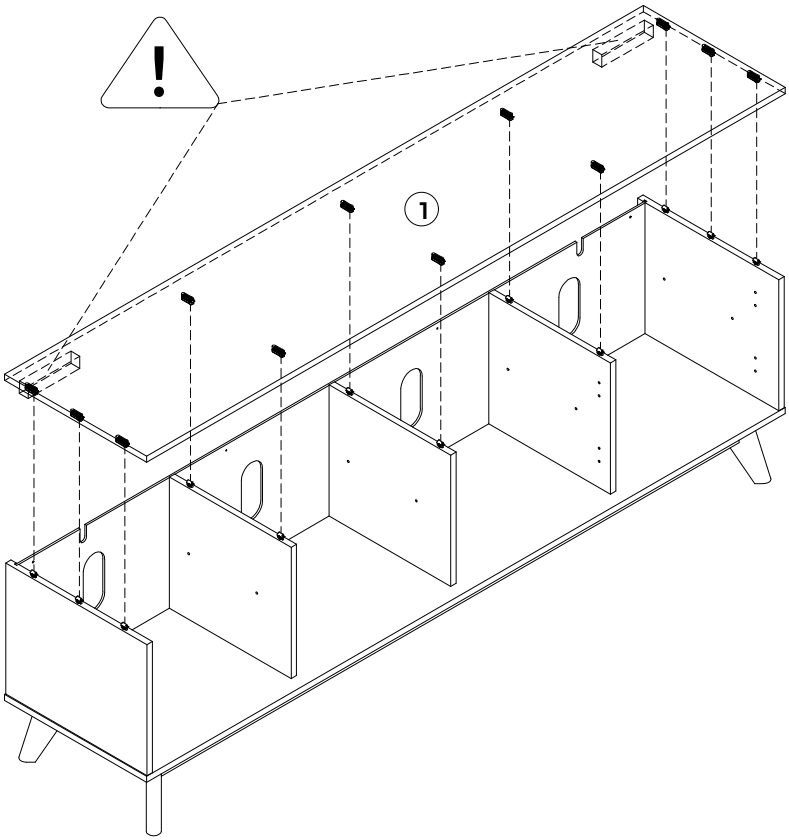

furniturebox

STEP 7

If necessary, gently adjust the Top panel [1] sideways in either direction until XX and YY are equal.
Holding it in place, fix 6 x wedges [L] to assembled unit with 6 x screws [M] as shown, using a Phillips head screwdriver.
Screw 8 x screws [M] into Back panel [7] as shown, using a Phillips head screwdriver.

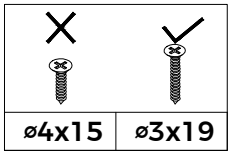

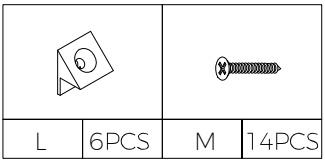

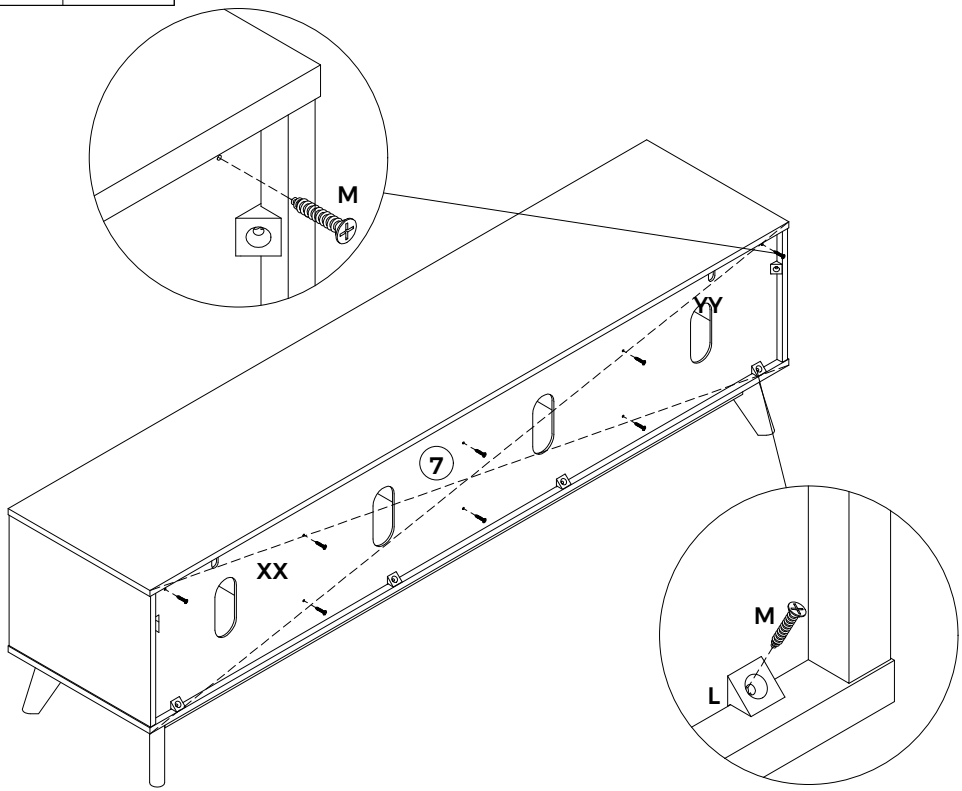

furniturebox

STEP 8

With assistance, move the TV unit to the final position. If needed, adjust TV unit's level by rotating the foot.

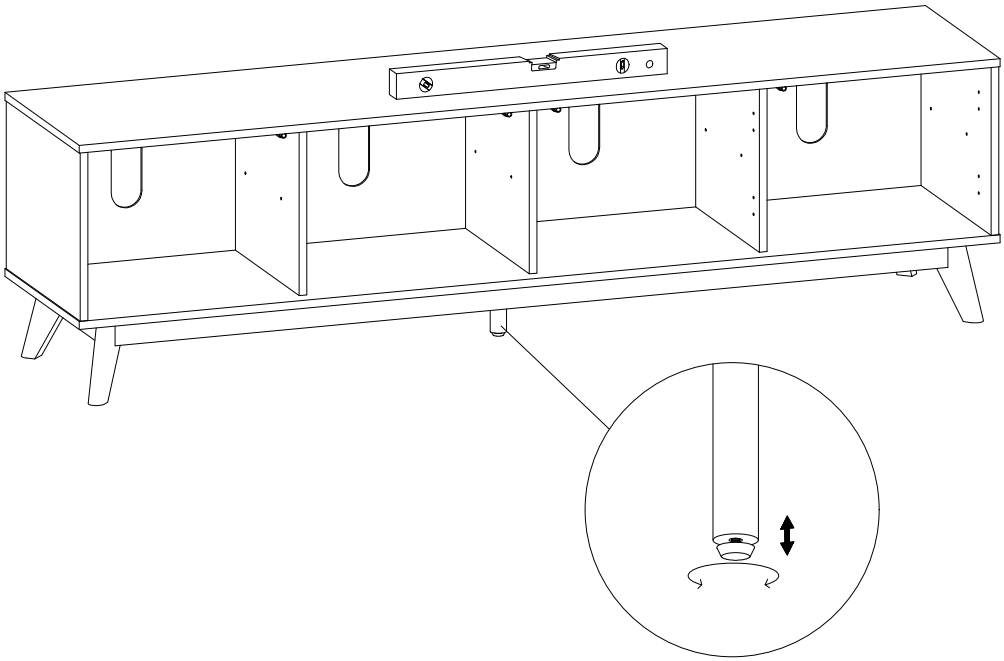

furniturebox

STEP 9 - Anti-tip Restraint

WARNING

To reduce the risk of serious injury or death from tip-over, this unit must be securely anchored to a suitable wall before use.

- Never allow children to climb, stand or hang on this furniture.
- Always secure the unit to a suitable wall using appropriate fixings for your wall type.
- Before drilling, check for hidden electrical cables, water pipes and other concealed services.
- If you are unsure how to install the anti-tip restraint or select suitable fixings, seek advice from a qualified installer or your local hardware store.

Installation

1. With assistance, move the cabinet into its final position.
2. Using the attached L-brackets [J] as a guide, mark the fixing positions on the wall.
3. Move the cabinet away from the wall and prepare the wall for fixing as required.
4. Reposition the cabinet and securely fasten the L-brackets [J] to the wall using fixings suitable for your wall type.
5. Check that the cabinet is level, stable and securely anchored before use.

Important Handling Note

Always lift the cabinet from the base. Do not lift or carry the cabinet by the top panel, as this may cause damage or separation.

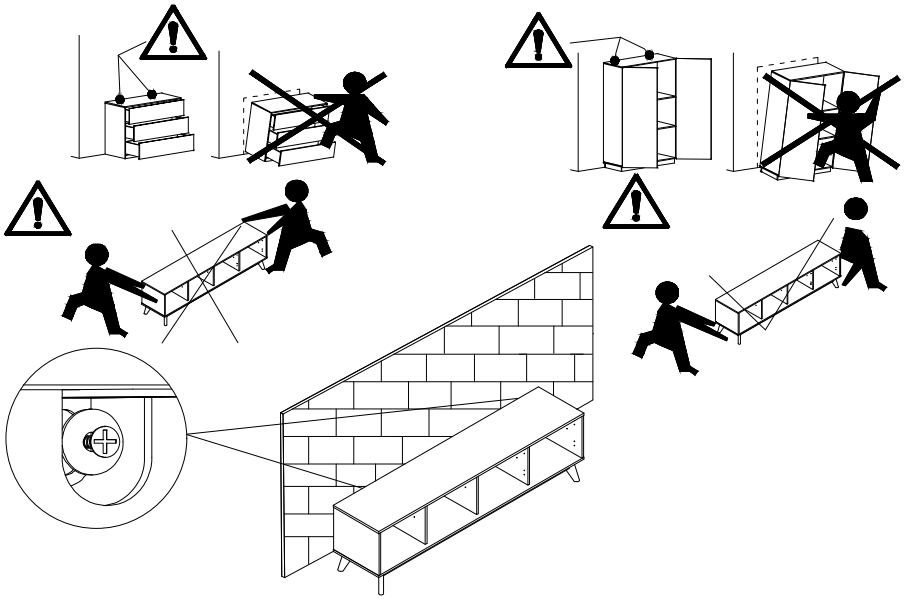

furniturebox

STEP 10

Insert 16 x shelf pins [Q] into desired holes in the panels.
Place 2 x Side shelves [8] and 2 x Middle shelves [9] into TV unit as shown by resting on the shelf pins

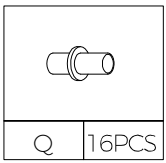

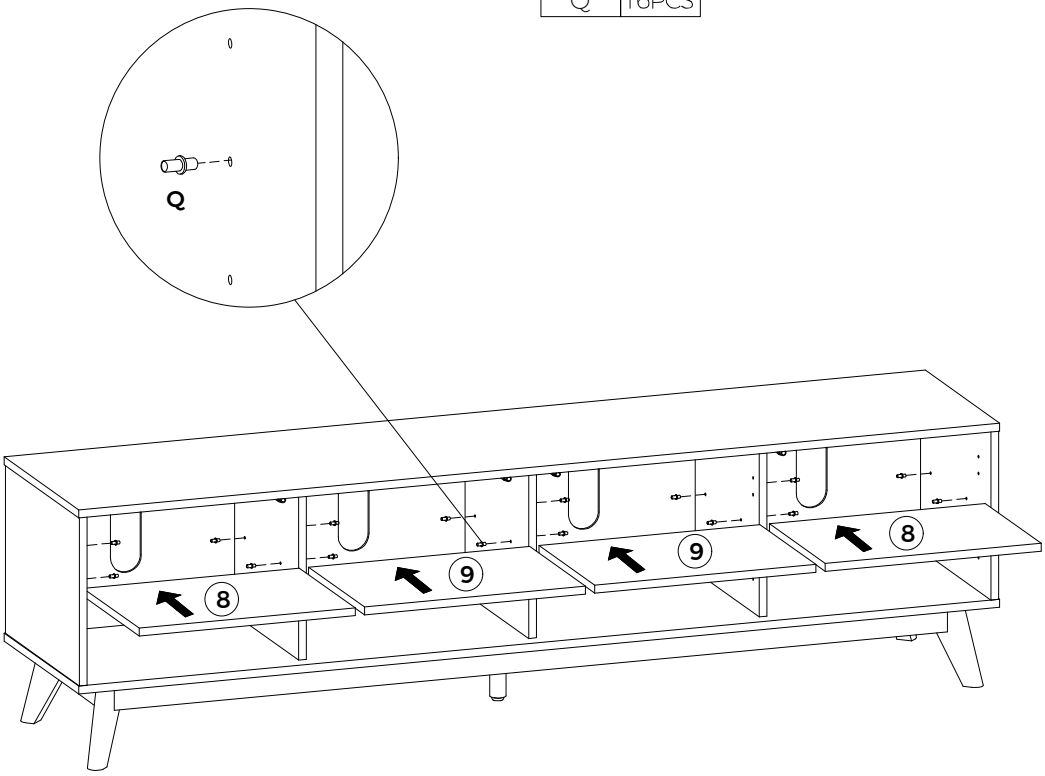

furniturebox

STEP 11

Attach 8 x hinges [N] to 4 x Doors [10] with 16 x screws [P] as shown, tighten with a Phillips head screwdriver.

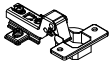			
N	8PCS	P	16PCS

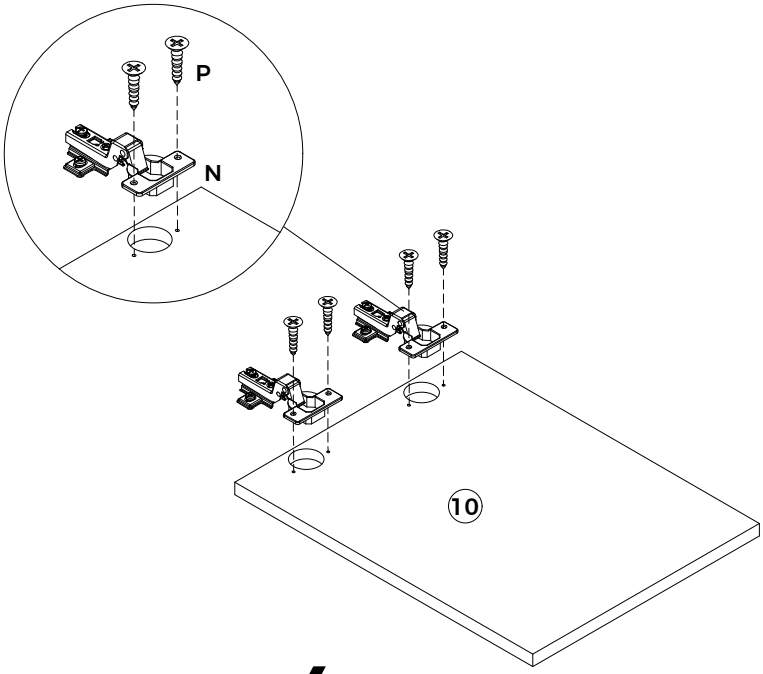

x4

furniturebox

STEP 12

Attach 4 x Doors [10] to assembled frame as shown, using a Phillips head screwdriver.

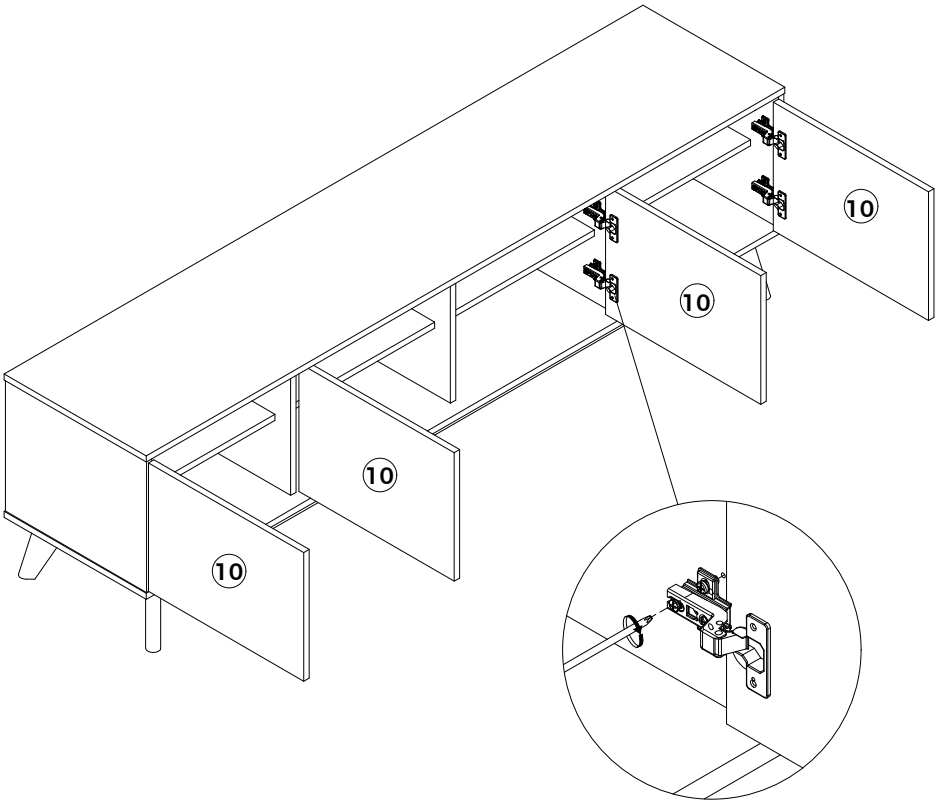

furniturebox

STEP 13

After transportation the push-to-open latches may require adjustment if they are not working. See diagrams below. To adjust the latches, please push and release the piston once to allow it to extend outwards. Once extended, gently turn the piston clockwise or anti-clockwise to correct its position. Close and open the door to confirm latch is functioning correctly.

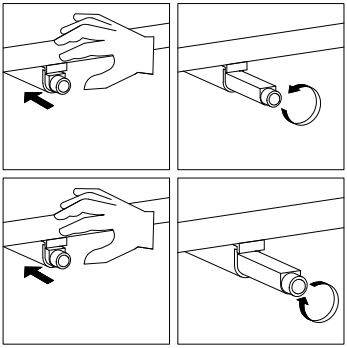

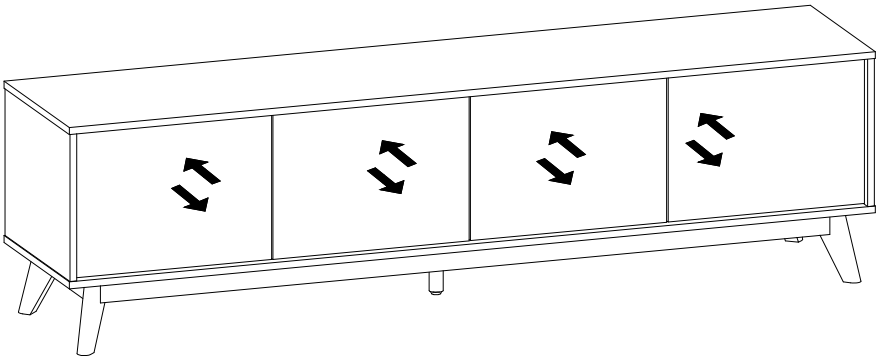

furniturebox

STEP 14

Door adjustment:

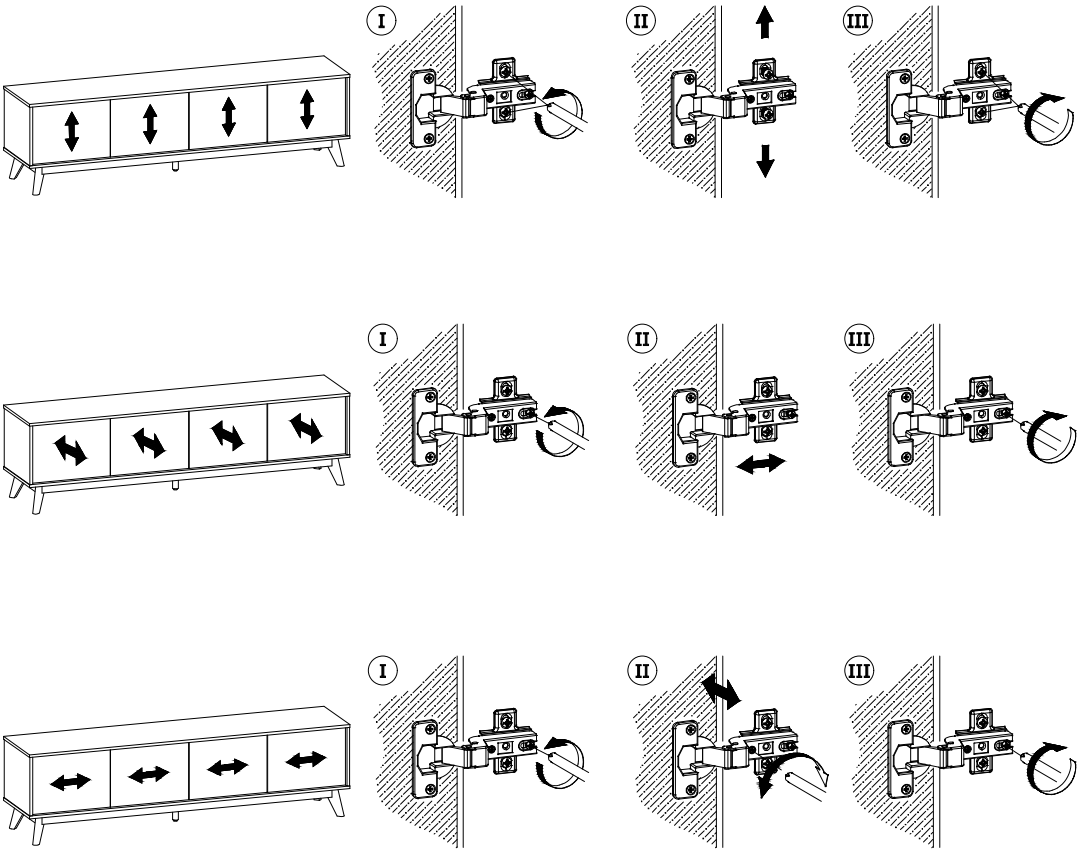

furniturebox

STEP 15

NOTE: To open door, push the corner of the door inward as shown.

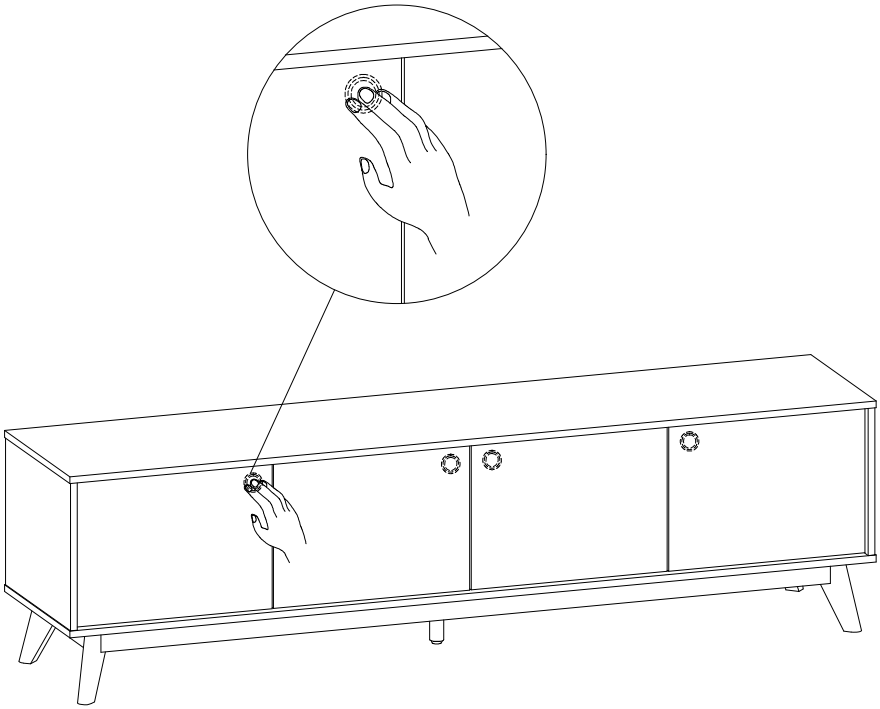

our 2 year GUARANTEE

Our products come with a 2 year guarantee, giving you extra peace of mind when shopping with us!

What the guarantee covers

PRE-INSERTED FIXINGS
e.g. loose metal threads

FAULTY JOINTS
e.g. legs bending

EXTERNAL FIXING FAULTS
e.g. metal discs removing from table top

STRUCTURAL INTEGRITY
e.g. the frame of the product

Activate your Guarantee

Scan the QR code to read the full guarantee online and register your product. It only takes a moment to fill out.
Or visit: furniturebox.co.uk/our-guarantee

Furniturebox Unit 6, Indurent Park Chippenham, Clanville Way, Chippenham, SN15 5BD, UK
Telephone: 01747 863 333 **Email:** sales@furniturebox.co.uk