TABLE SOCCER

SUO-5429GL

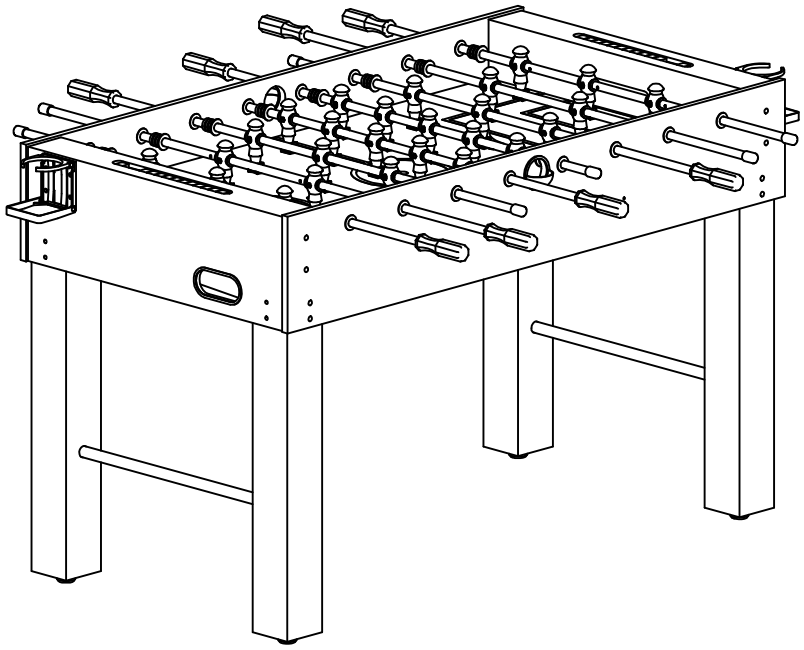

.Assembly Instructions .Parts List

WARNING: Choking Hazard--toy contains small balls and/ or small parts, Not for children under 3 years

IMPORTANT!

Before attempting assembly, please read through this instruction book to familiarize yourself with all the parts and assembly steps. We recommend that two adults assemble this game. Please refer to the Parts List below and be sure that all parts have been included.

PARTS IDENTIFIER

①  3.5*45RWA 4EA	②  3.5*12FA 10EA	③  6*35TM 24EA	④  SOCCER BALL 2EA	⑤  WASHER 24EA
⑥ 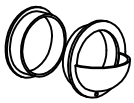 GOAL SLEEVE 2EA	⑦  LEG LEVELER 4EA	⑧  NUT 26EA	⑨  4*28TM 26EA	⑩ 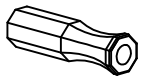 HAND GRIP 8EA
⑪  END CAP 8EA	⑫ 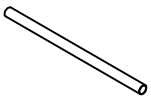 CHROME BAR 2EA	⑬  TASSENHALTER 2EA	⑭  ALLEN WRENCH 1EA	⑮  RUBBER BUMPER 16EA
⑯ 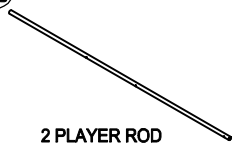 2 PLAYER ROD 2EA	⑰ 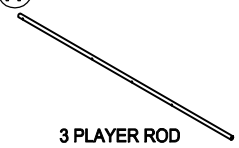 3 PLAYER ROD 4EA	⑱ 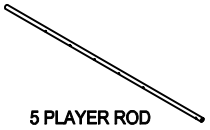 5 PLAYER ROD 2EA	⑲  PLAYER (blue) 13EA	⑳  PLAYER (black) 13EA
㉑ 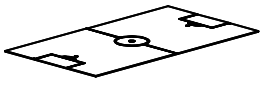 SOCCER PLAYFIELD 1EA	㉒ 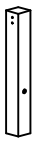 LEG 4EA	㉓ 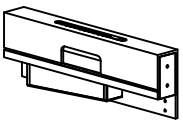 END APRON 2EA	㉔ 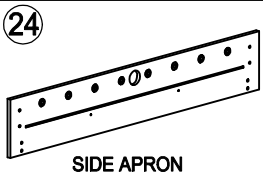 SIDE APRON 2EA	㉕  SUPPORT BRACE 2EA

ASSEMBLY INSTRUCTIONS:
We recommend that two adults work together to assemble this game.

Step 1 CONNECT THE SIDE APRON (#24) AND THE GOAL END APRON (#23) WITH SCREWS (#3) AND WASHERS (#5) AND TIGHTEN THEM
CONNECT AND TIGHTEN THE SIDE APRON (#24) TO SUPPORT BRACE (#25) WITH SCREWS (#1)

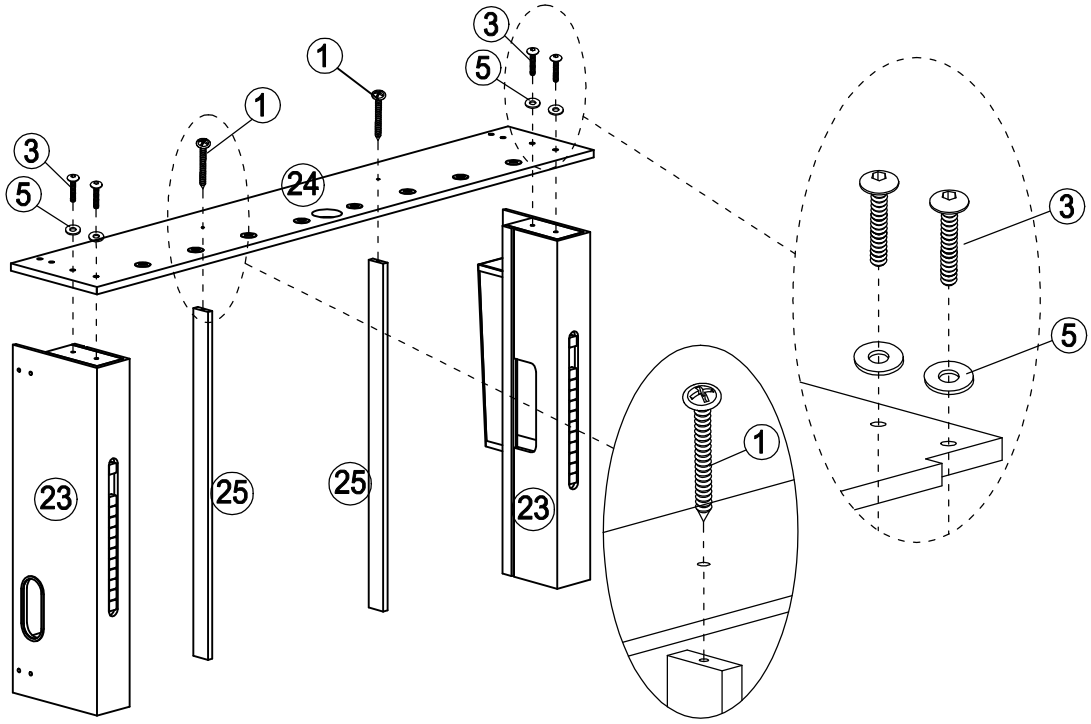

Step 2 Insert the panel (#21) into the installed end apron (#23) and side apron (#24) slots

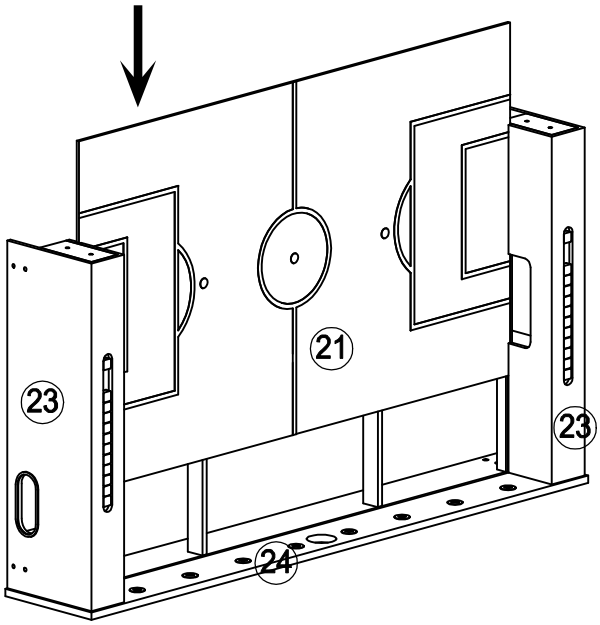

Step 3

Connect and tighten the side apron (#24) to the installed end apron (#23) with screws (#3) and gaskets (#5)
Connect the side apron (#24) with the installed back brace (#25) to the hole position and tighten it with screws (#1)

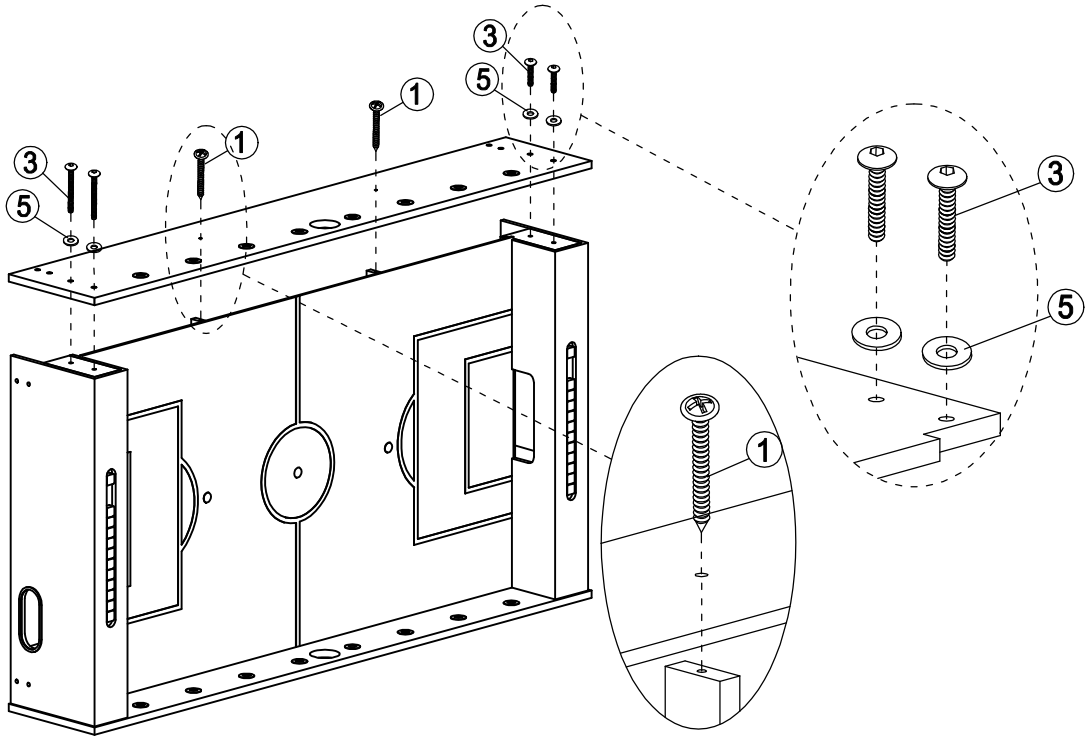

Step 4

Insert the chrome bar (#12) into the holes of the leg (#22)
Then put it into the installed long and short side holes, and connect and tighten it with (#3) screw and gasket (#5).

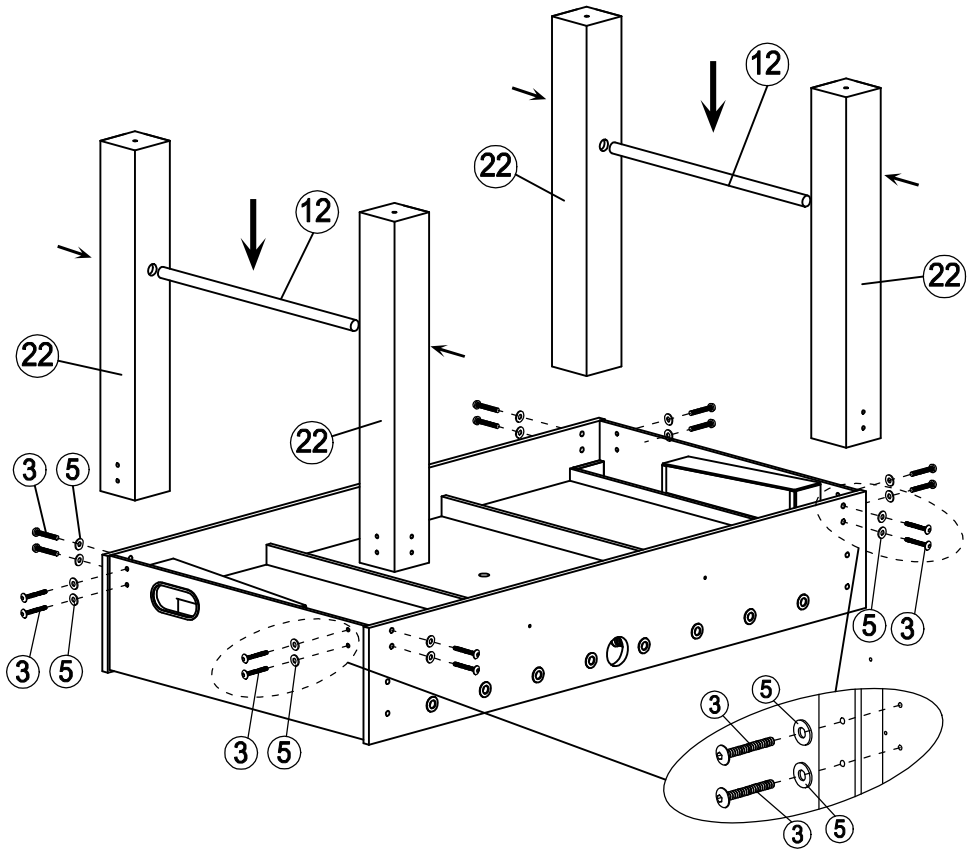

Step 5

Tighten the adjusting pad (#7) on the leg (#22)

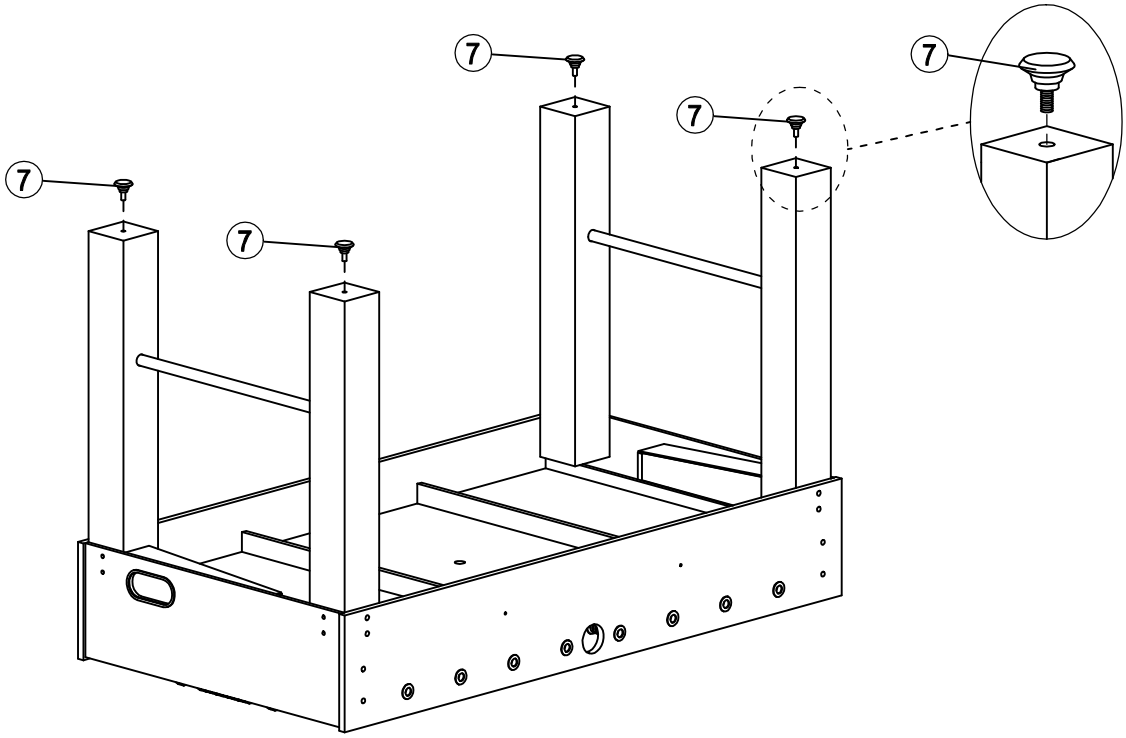

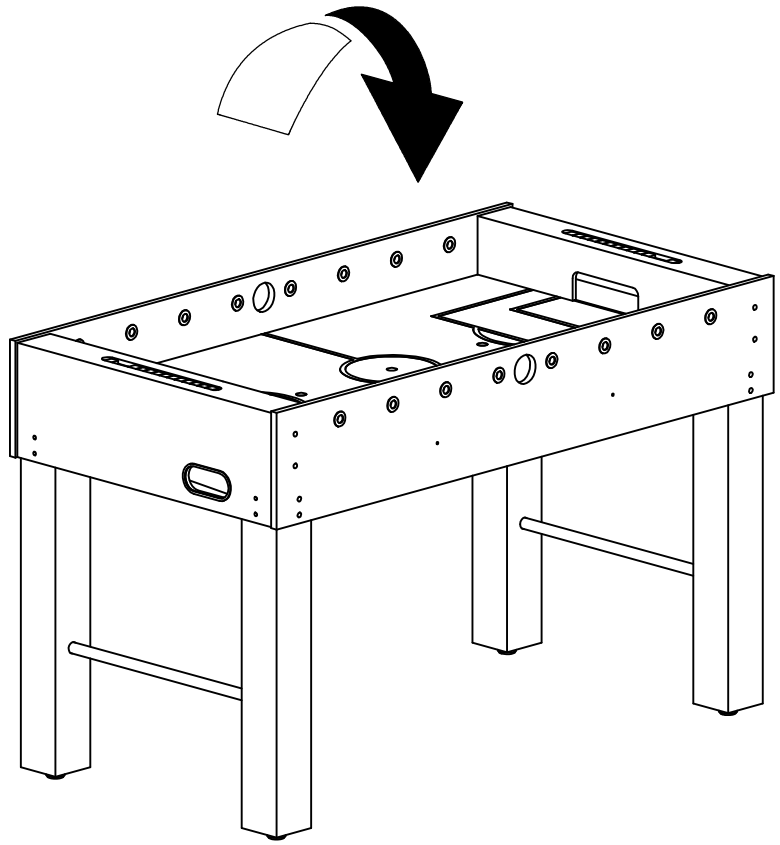

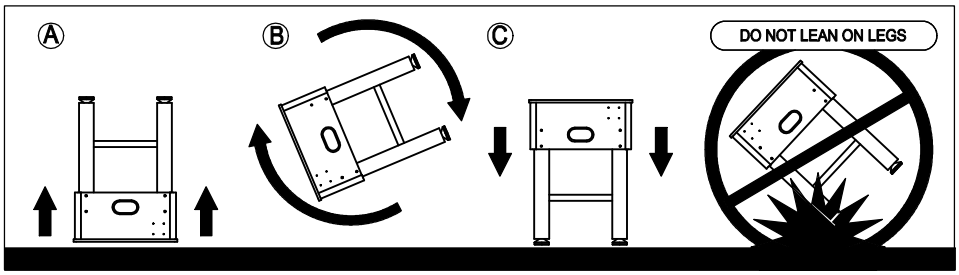

Step 6

INSERT THE STEEL PIPE (#17) INTO THE HOLE ON THE SIDE APRON (#24), THEN CONNECT THE RUBBER RING (#15),3 HOME TEAM PLAYER (# 19), AND THE RUBBER RING (#15).
INSERT THE STEEL PIPE (#16) INTO THE HOLE ON THE SIDE APRON (#24), THEN CONNECT THE RUBBER RING (#15),2 HOME TEAM PLAYER (# 19), AND THE RUBBER RING (#15).
INSERT THE STEEL PIPE (#18) INTO THE HOLE ON THE SIDE APRON (#24), THEN CONNECT THE RUBBER RING (#15),5 HOME TEAM PLAYER (# 19), AND THE RUBBER RING (#15).
INSERT THE STEEL PIPE (#17) INTO THE HOLE ON THE SIDE APRON (#24), THEN CONNECT THE RUBBER RING (#15),3 HOME TEAM PLAYER (# 19), AND THE RUBBER RING (#15).

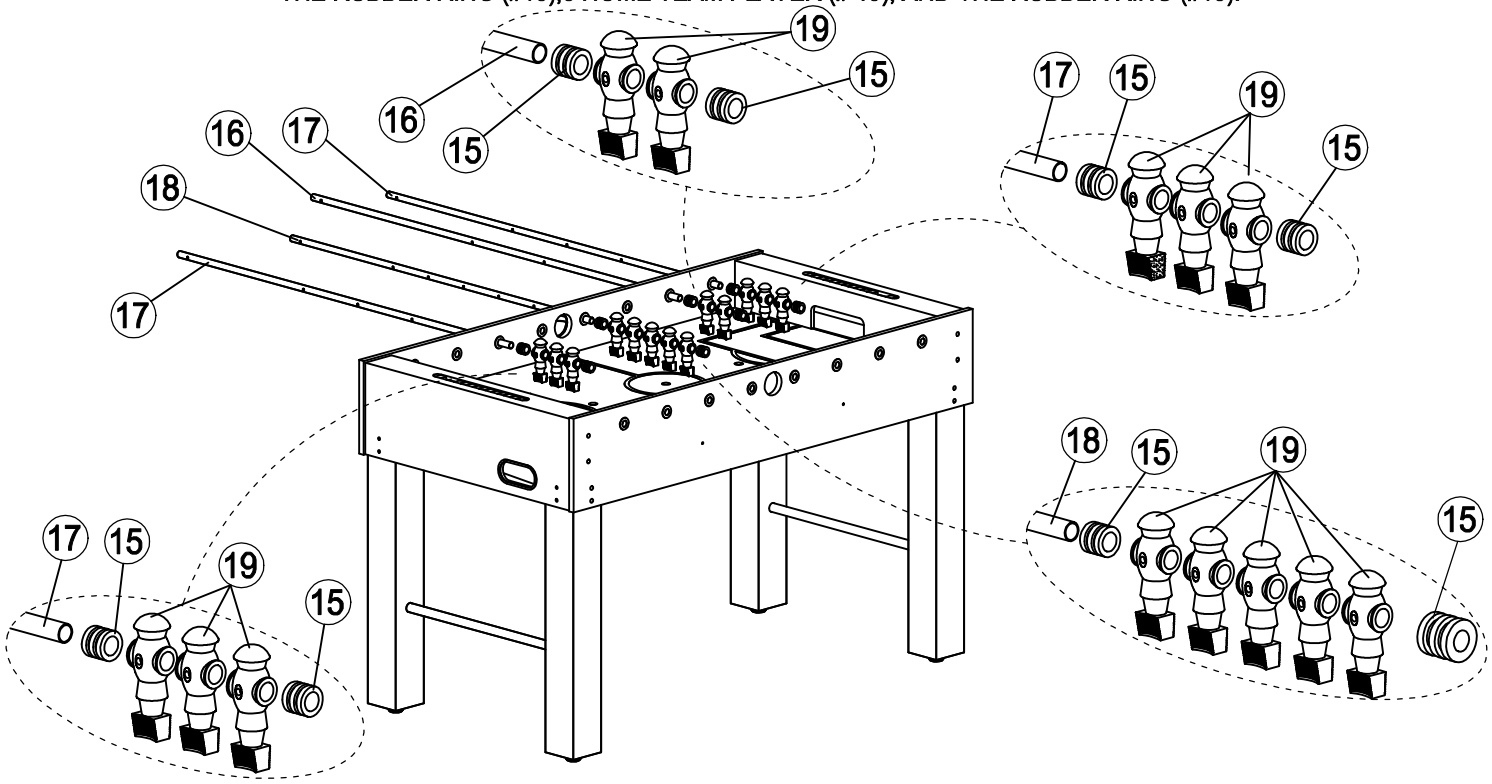

Step 7

INSERT THE STEEL PIPE (#17) INTO THE HOLE ON THE SIDE APRON (#24), THEN CONNECT THE RUBBER RING (#15),3 HOME TEAM PLAYER (# 20), AND THE RUBBER RING (#15).
INSERT THE STEEL PIPE (#16) INTO THE HOLE ON THE SIDE APRON (#24), THEN CONNECT THE RUBBER RING (#15),2 HOME TEAM PLAYER (# 20), AND THE RUBBER RING (#15).
INSERT THE STEEL PIPE (#18) INTO THE HOLE ON THE SIDE APRON (#24), THEN CONNECT THE RUBBER RING (#15),5 HOME TEAM PLAYER (# 20), AND THE RUBBER RING (#15).
INSERT THE STEEL PIPE (#17) INTO THE HOLE ON THE SIDE APRON (#24), THEN CONNECT THE RUBBER RING (#15),3 HOME TEAM PLAYER (# 20), AND THE RUBBER RING (#15).

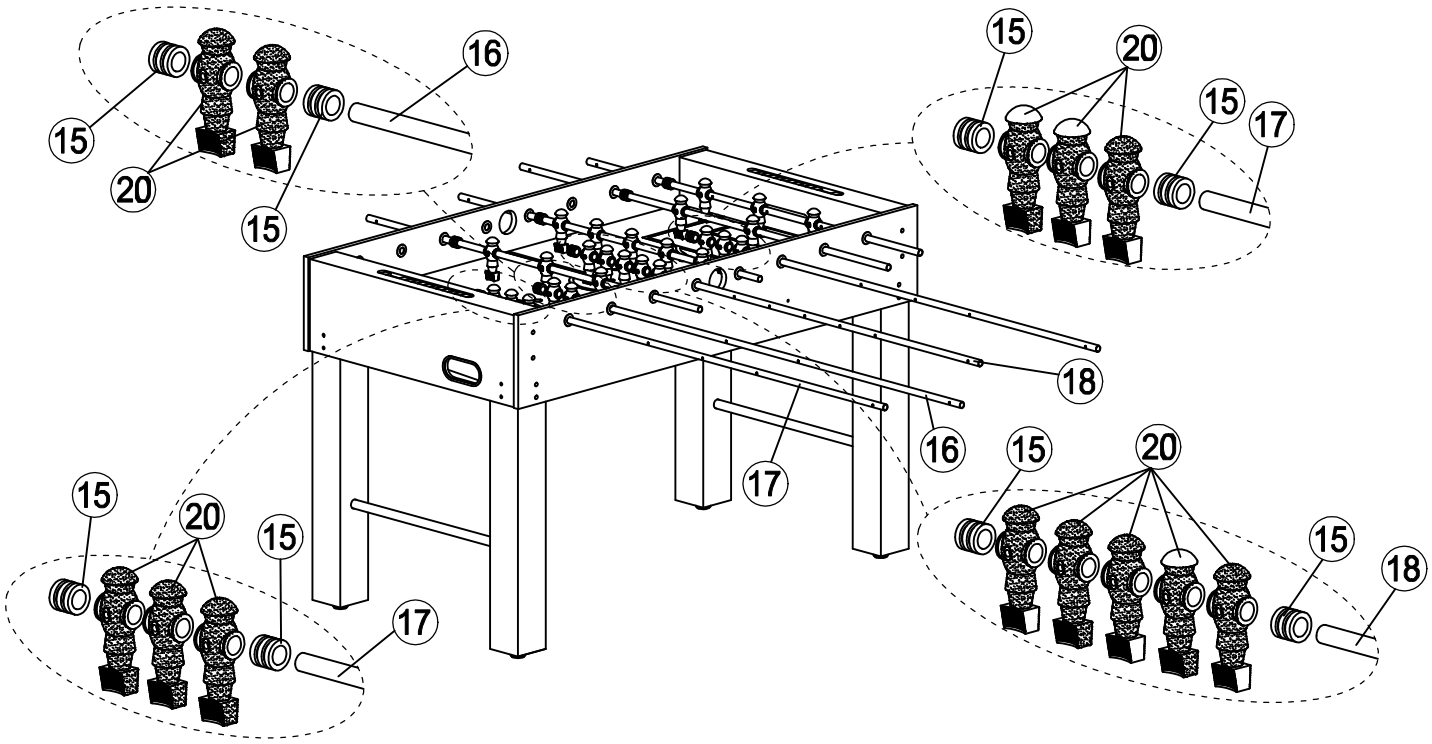

Step 8

ORDER OF PLAYERS

(Overhead View - Table upside down)

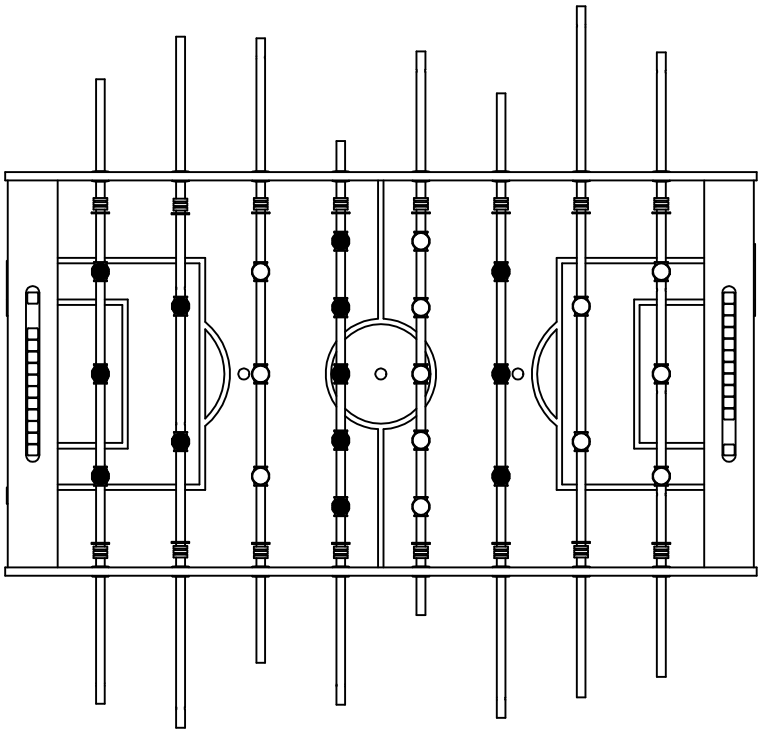

○ =HOME TEAM

● =VISITORS

Step 9

LOCK EACH PLAYERS (#19) (#20) THROUGH THE NUT (#8)
WITH SCREWS (#9) TO THE HOLE POSITION.
INSERT THE HANDLE GRIP (#10) AND THE END CAP (11 #) ON THE IRON PIPE
INSTALL THE ENTRY SLEEVE (# 6) ON THE LONG SIDE WITH SCREWS (# 2)

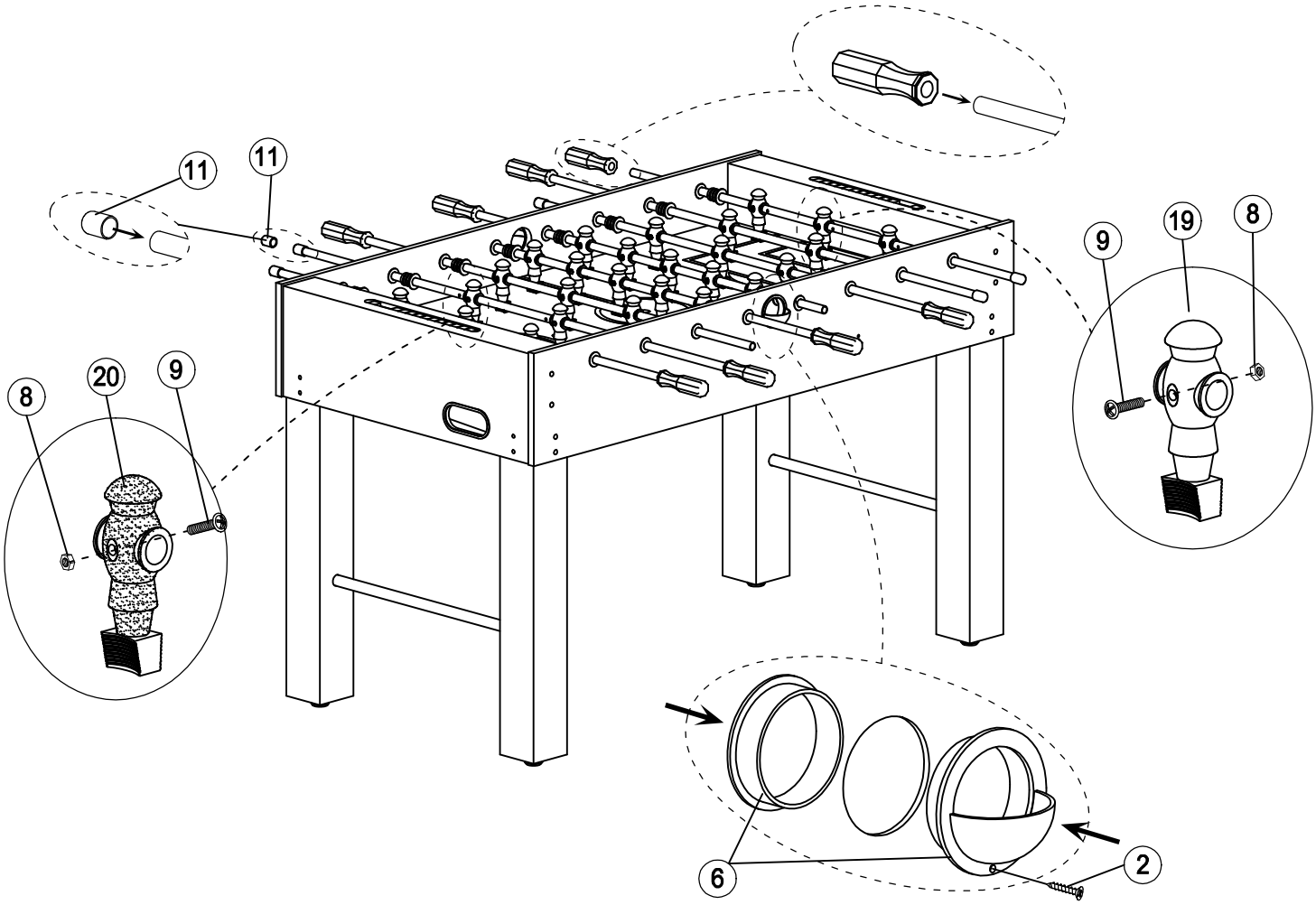

Step 10 INSTALL THE CUP HOLDER (#13) ON THE SHORT SIDE WITH SCREWS (#2).

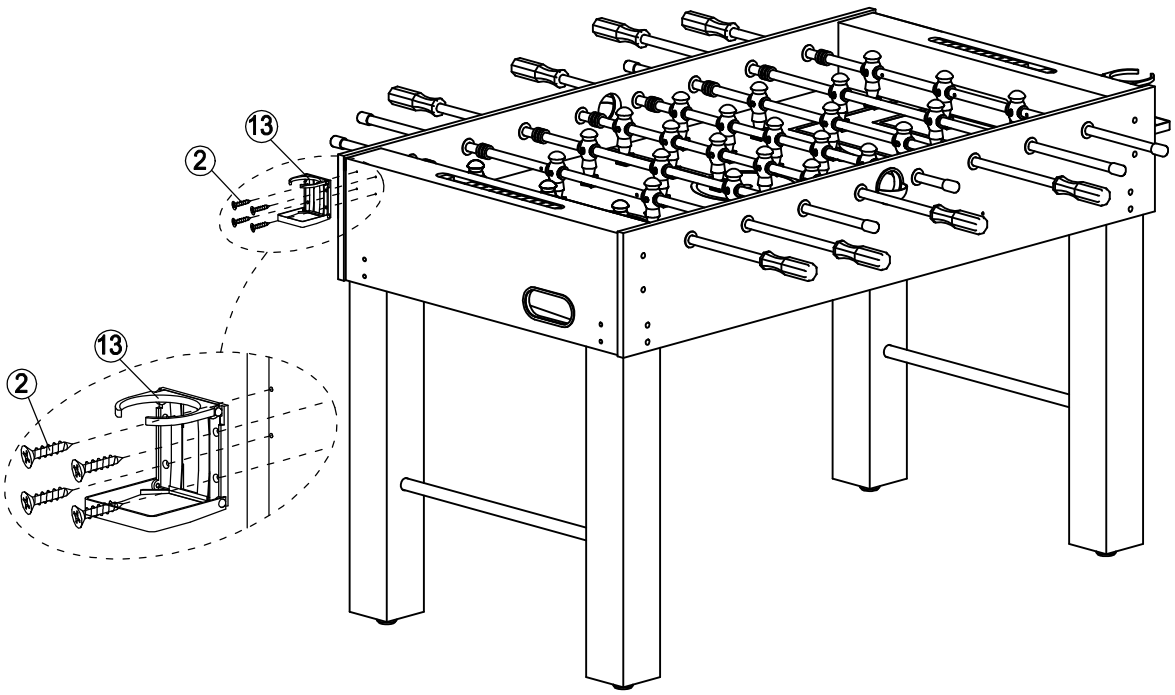

Step 11

