Courtyard Patio Furniture&Accessories

Patio Furniture sets–Conversation sets

Coffee Table

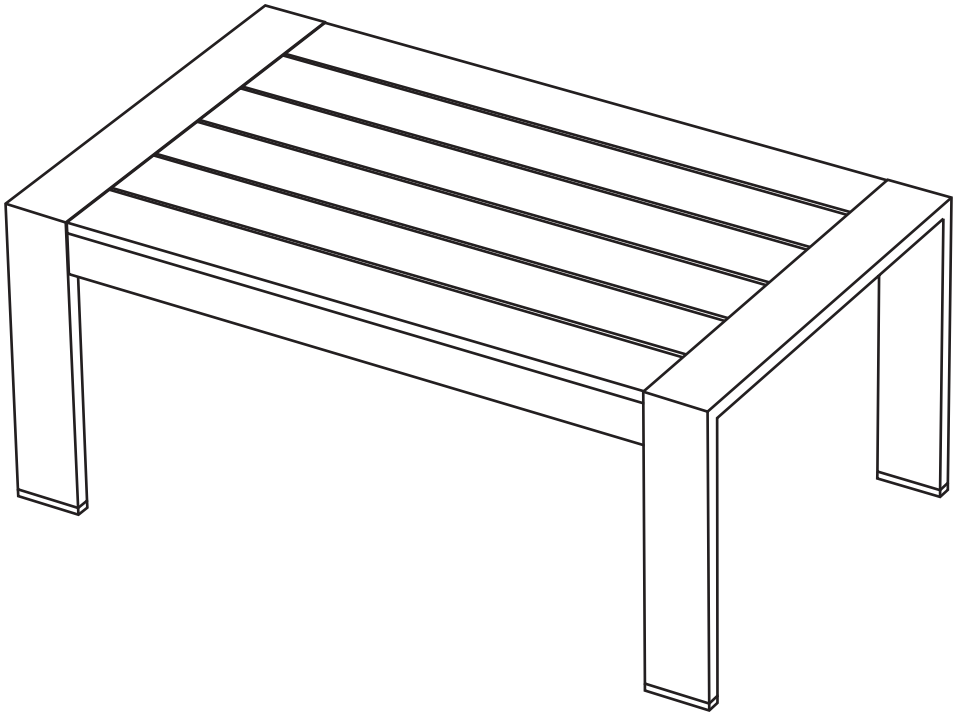

CUSTOMER SUPPORT

Dear customer
Thank you for your purchase.

This product is a non-permanent outdoor structure designed and manufactured for personal use rather than commercial use.
Please confirm whether the installation is permitted in your states firstly.

1. When you receive the product, please make sure that all the boxes have arrived,and all the parts are intact.
2. Please browse the entire installation manual before assembling, retain this instruction manual for future reference.
3. If any problem occurs unsatisfactorily as follows：
   - Lack of boxes， or some boxes are not arrived.
   - The outer box is damaged.
   - The product is damaged / bent / cracked while you open the box.
   - The parts / accessories / assembly tools are missing.
   - The product is hard to assemble.
   - The instructions are not clear, or hoping for assistance with installation.
   - The product has functional problems.
   - The product did not meet your expectations.
   - Other aspects that you are not satisfied with.

Please feel free to contact us for help firstly. If there is any damage, please send us clear photos. We will check and do our best to provide the best solution for you. The missing or damaged parts will be delivered to you within 5 days.

DO NOT RETURN YOUR UNIT TO THE STORE
CONTACT US FIRST

PARTS

1. Please ensure that all parts, accessories and installation tools are complete before starting the installation.
2. Due to the variety of accessories, some parts may be glued together, some parts may be trapped inside the larger ones, please check carefully.
3. In case you cannot find or lose some small parts or screws during installation, we have provided extra parts.
4. If any accessories are missing or damaged, please contact us immediately.

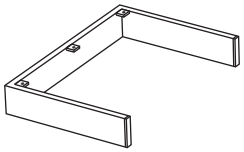

Leg

H x2

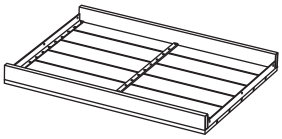

Desktop

I x1

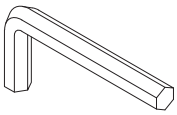

4MM

1 x1

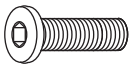

M6X15

8 x6

M6

6 x6

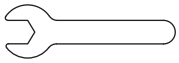

7 x1

1

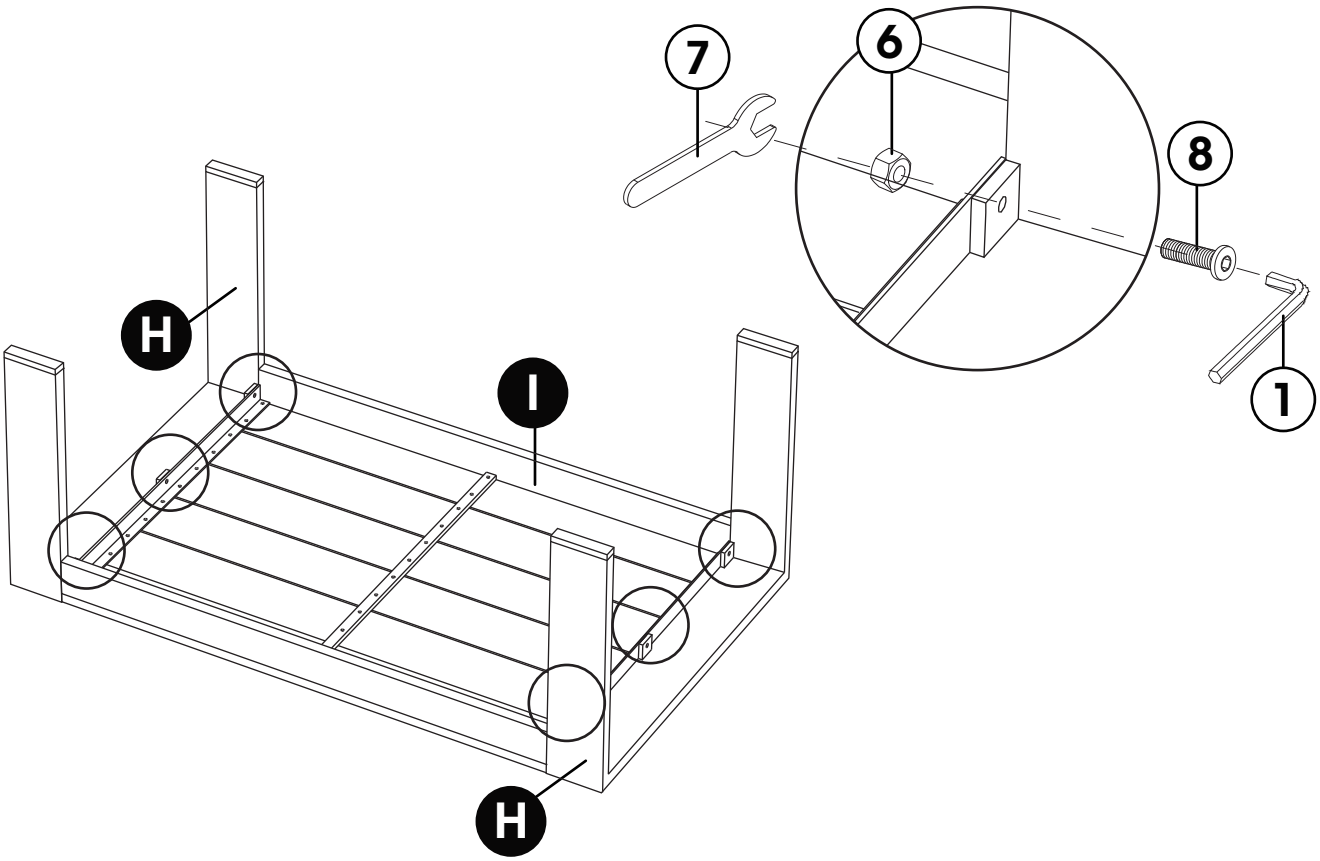

2

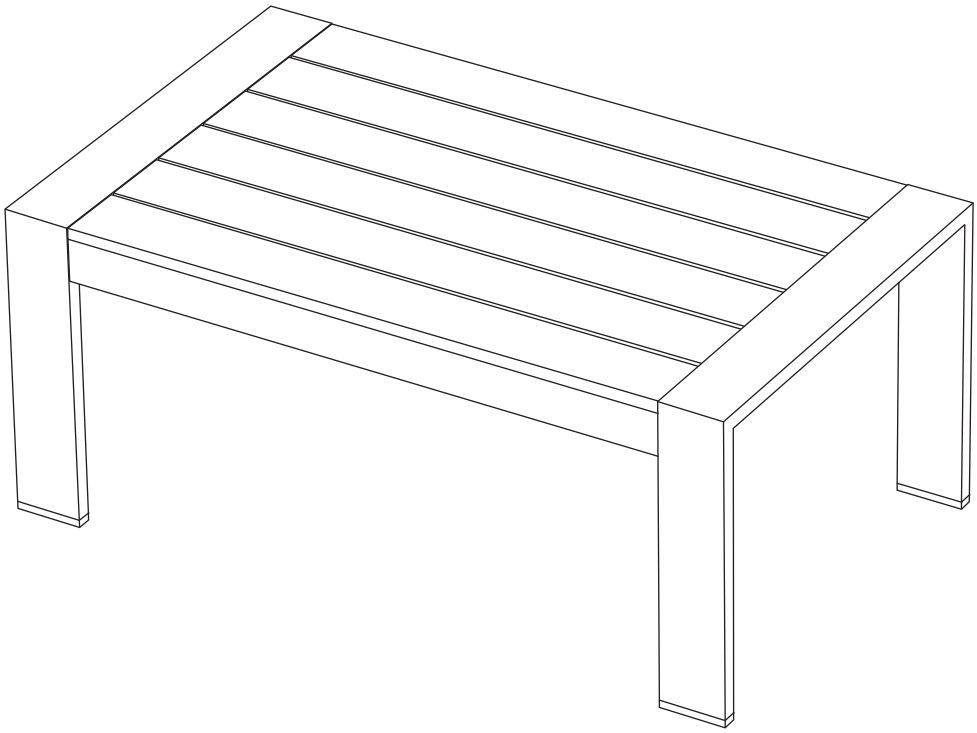

AFTER-SALE

AFTER-SALE SERVICE

If you have any suggestions or encounter quality issues with our products, please contact us first.

Our after-sales team will respond within 24 hours, and we will do our best to provide a solution until you are satisfied.

GUARANTEED CUSTOMER SERVICE

Your shopping experience is very important to us!

If you feel unsatisfied or have any questions,
just contact us!

If you want to share how wonderful our smart product makes your home, **just contact us** and share your pictures!

For further information,
just contact us!