ASSEMBLY INSTRUCTIONS
ITEM: MJ6006

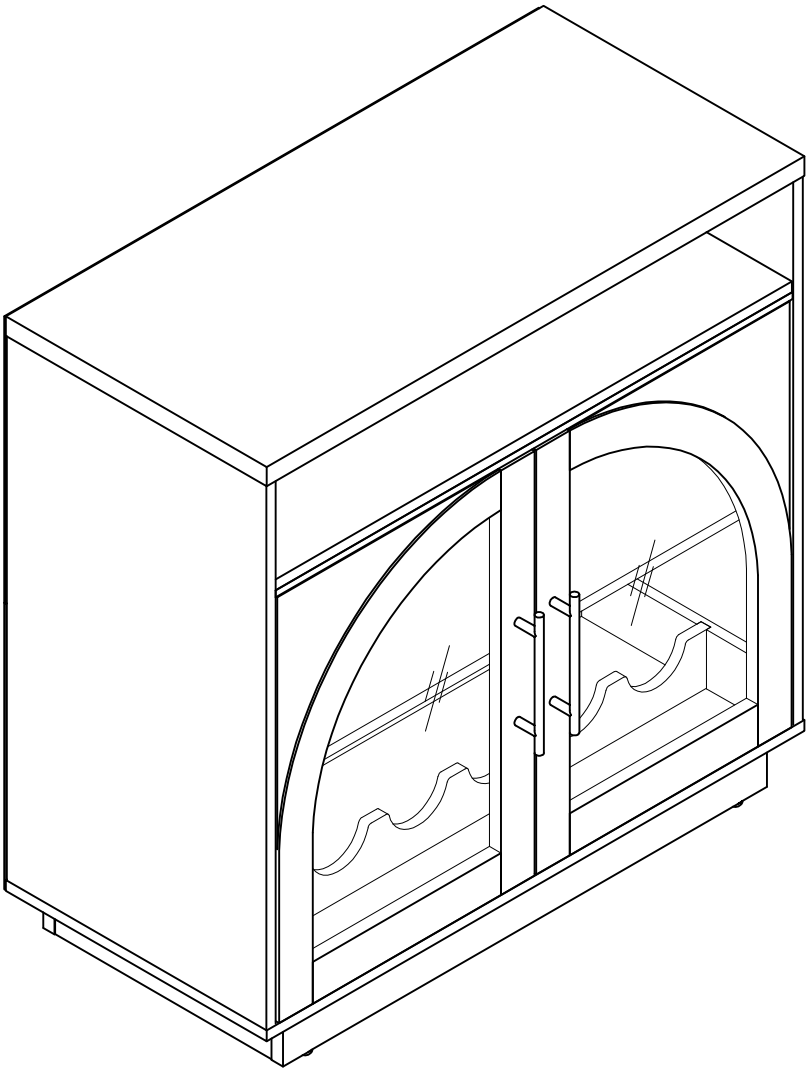

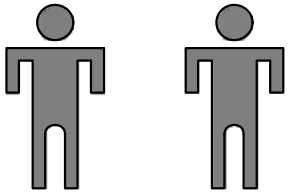

2 people for assembly

PACKAGE INCLUDE

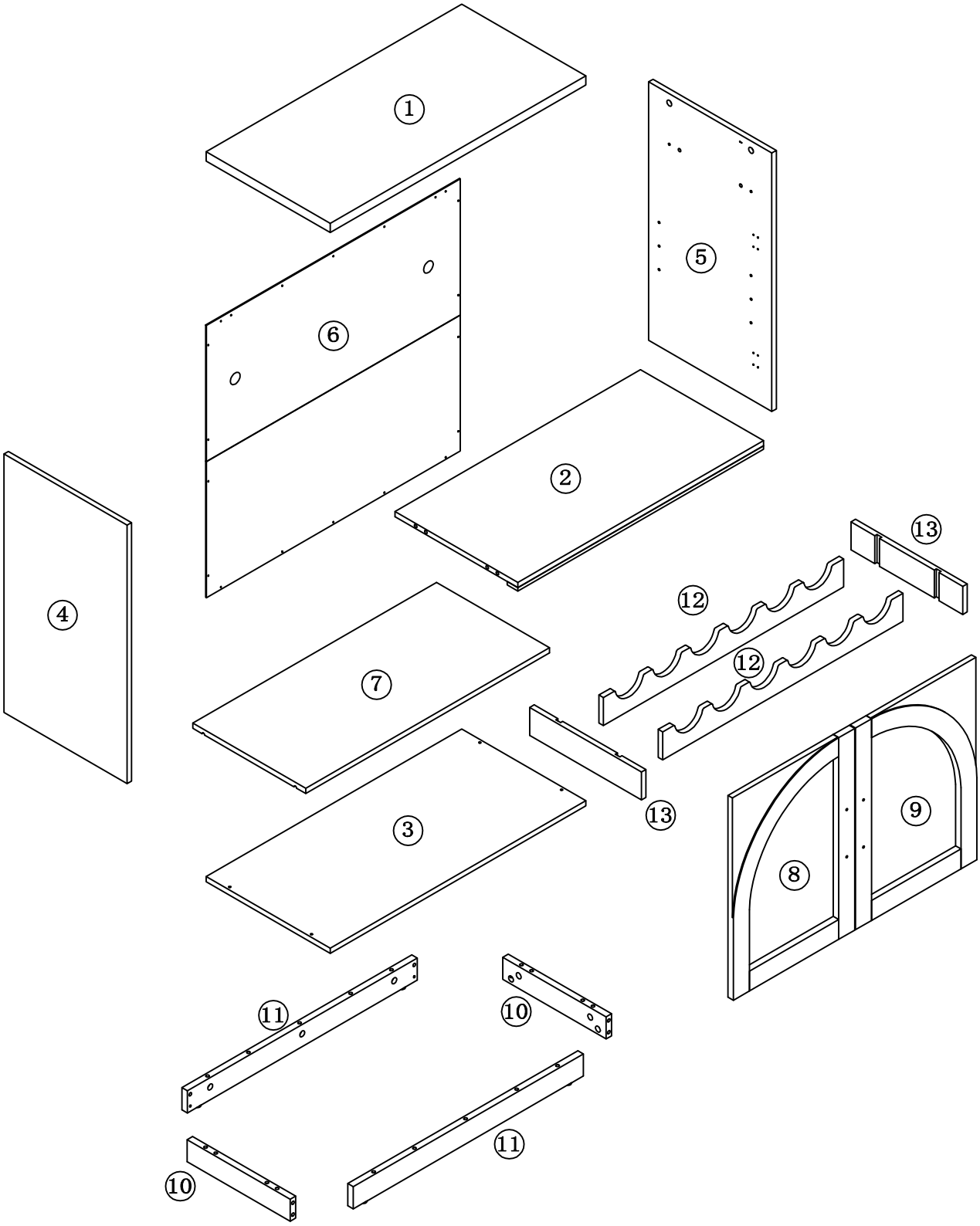

PACKAGE CONTENT

ϕ7.8X30MM 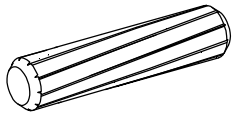 A 24X+1	ϕ3.5X15MM  B 18X+1	ϕ6X34MM 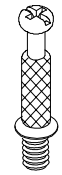 C 22X+1	ϕ15X12MM  D 22X+1
ϕ3X12MM  E 2X+1	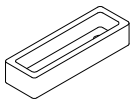 F 1X	ϕ4X50MM 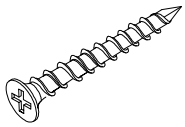 G 4X+1	ϕ5X15MM 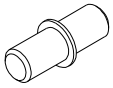 H 4X
ϕ4X14MM  I 24X+1	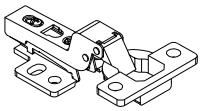 J 4X	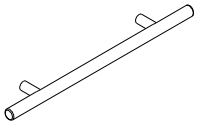 K 2X	ϕ5/32"X22MM 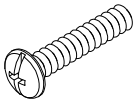 L 4X
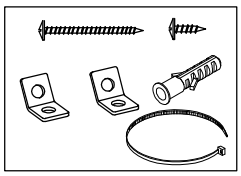 M 2X	 LED Light N 1X	 USB Plug O 1X	 Power Cord P 1X
 Q 4X+1	 R 4X+1	 Remote Control for LED Light S 1X	 T 8X+1

Now you can assemble the item.

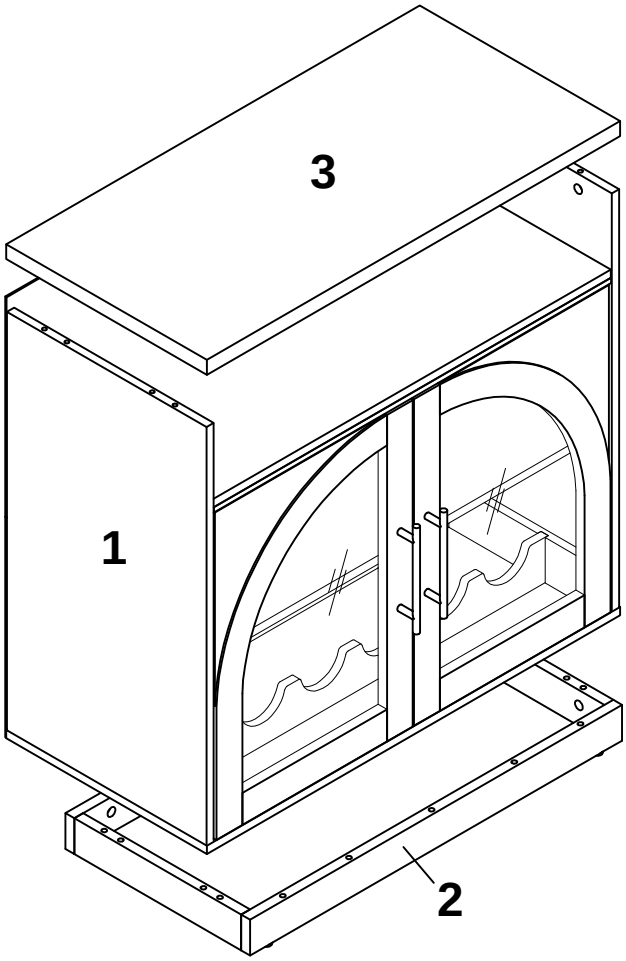

The installation process is divided into 3 parts:

1. Install the cabinet body

2. Install the cabinet base part

3. Install the top panel

Tip:
Using an electric screwdriver will make assembly easier.

How to use the cam lock system

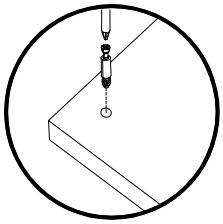

1. Screw cam boit into panel

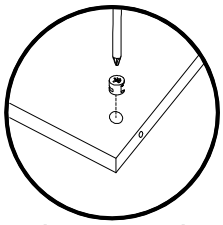

2. Push cam into panel - arrow feature on cam top points to panel edge

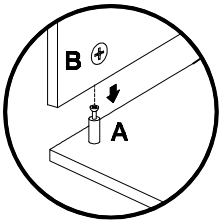

3. Aligu cam bolt(s) with cam(s) and insert all the way into cross-bored hole(s)

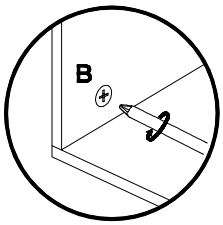

4. Rotate cam(s) clockwise 190°-230° to lock panels together

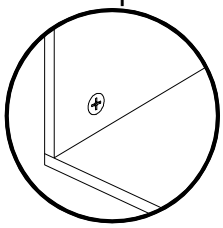

5. Panels should be tight against each other and connection should be rigid

Insert the wood dowel(A) at least half way by tapping lightly with a rubber mallet ,IF NECESSARY

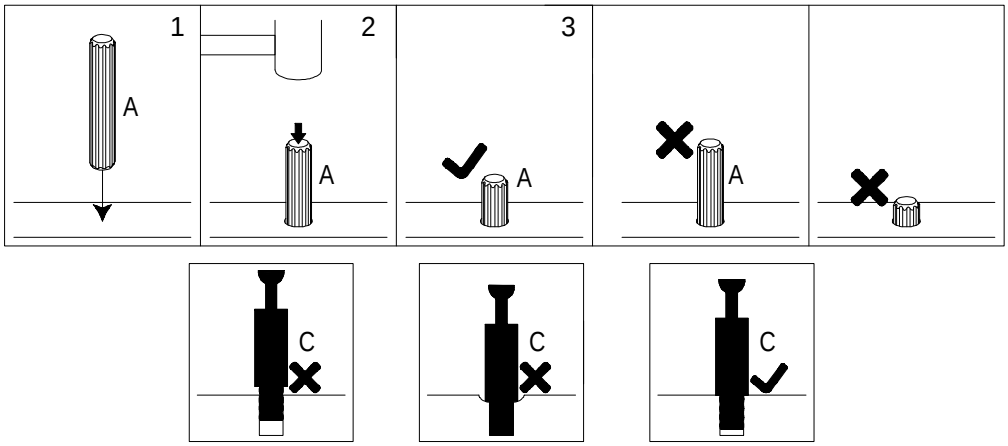

WARNING

- Unit must be placed on a level surface or leveled with included hardware (when applicable).
- Do not sit or stand on or allow children to climb, sit or stand on the assembled product.
- For safety reasons,it is imperative that this unit be mounted to the wall.
- Do not use without installing the tip restraint.
- Unit can tip over causing severe injury or death.
- Do not exceed the recommended weight limits.
- Evenly distribute the weight on each level and always keep the heavier loads on the bottom.
- Before cutting, drilling or hammering into any wall or floor surface, verify the location of electrical, plumbing and gas lines.Cutting may cause serious injury.

STEP 1

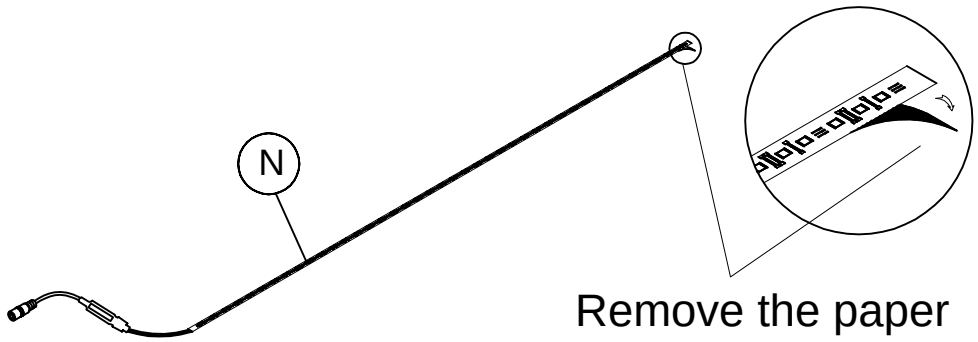

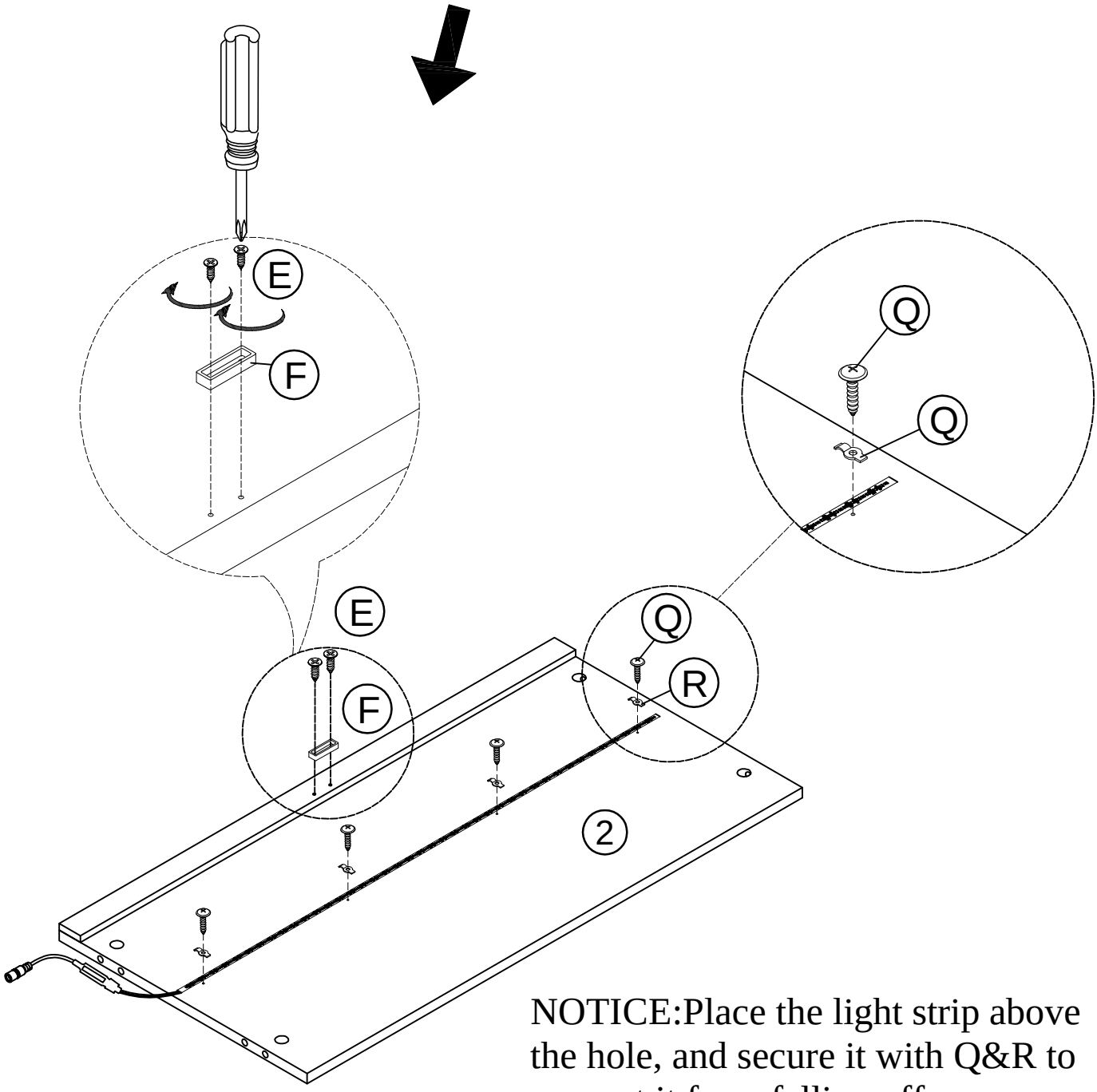

NOTICE:Place the light strip above the hole, and secure it with Q&R to prevent it from falling off.

STEP 2

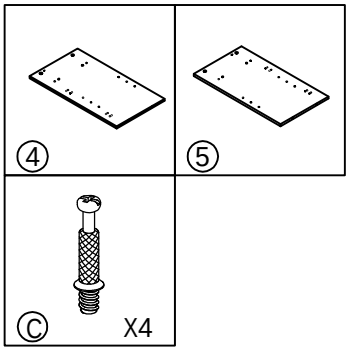

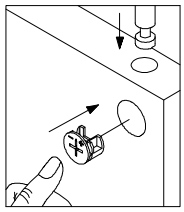

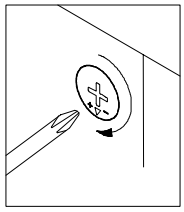

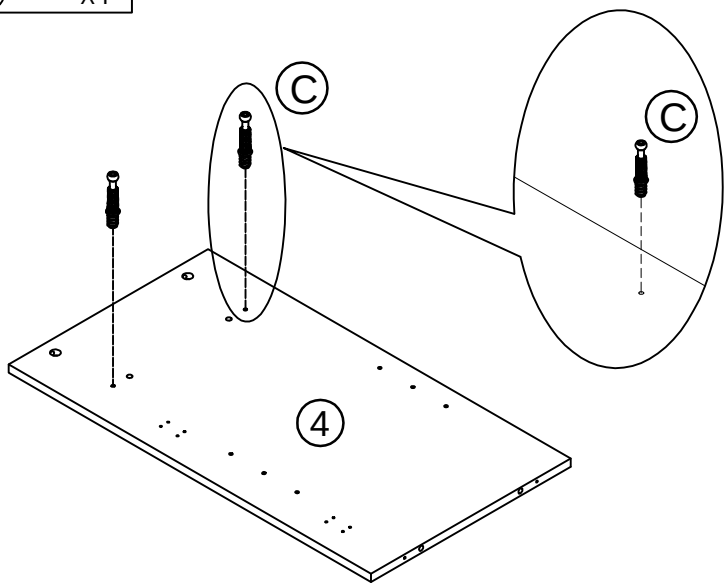

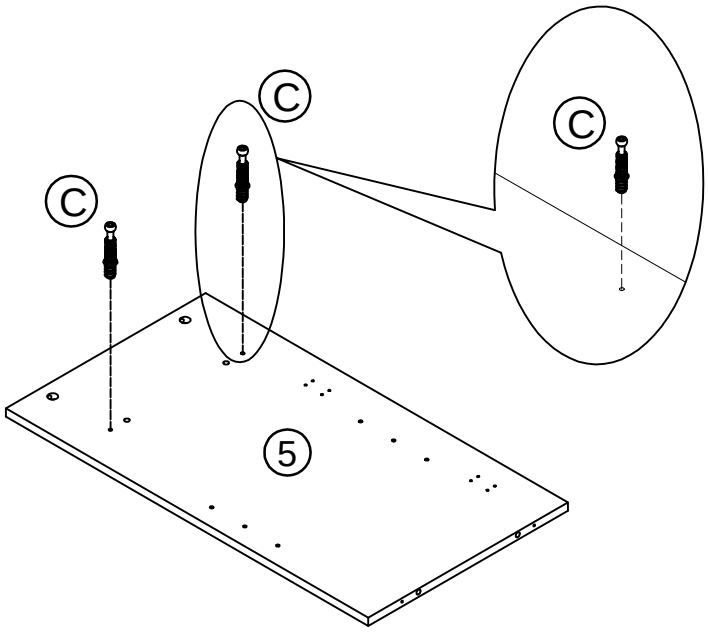

STEP 3

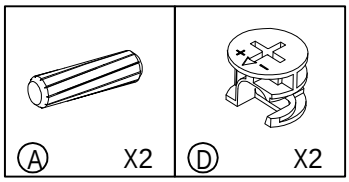

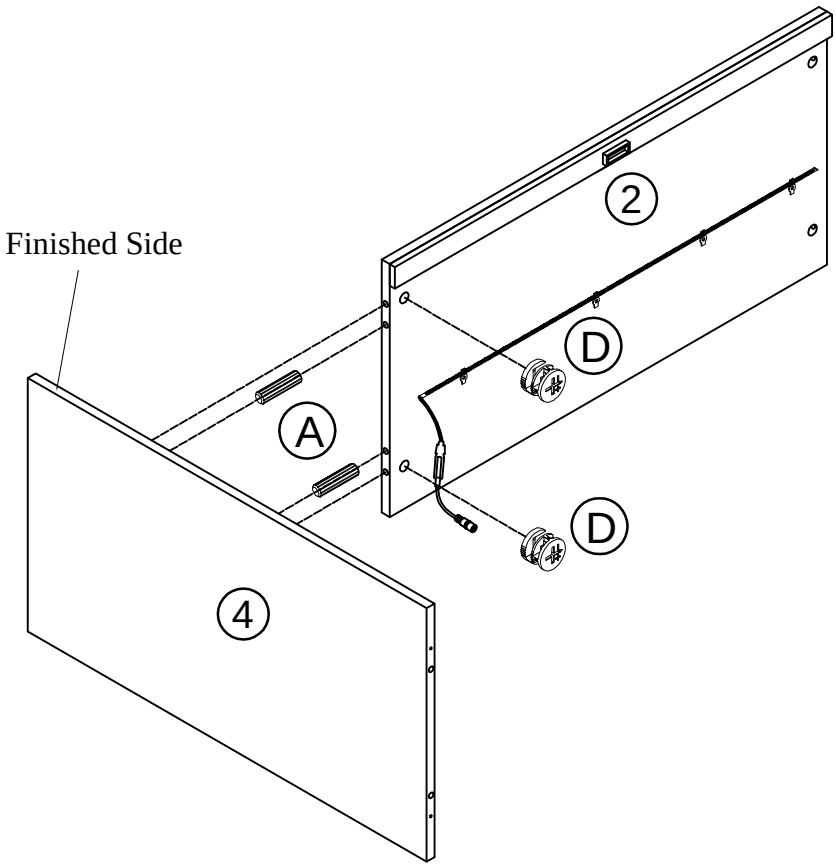

STEP 4

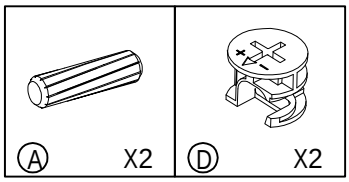

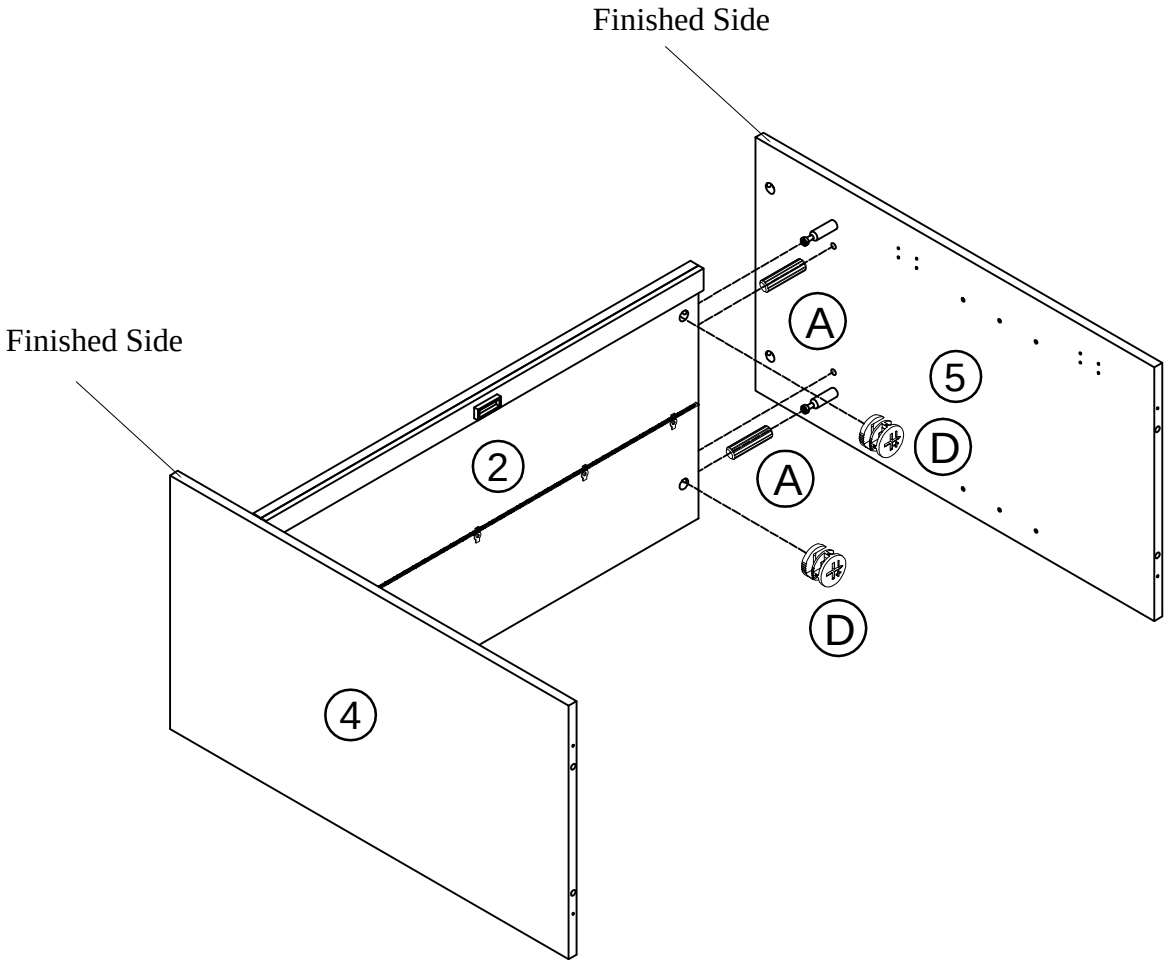

STEP 5

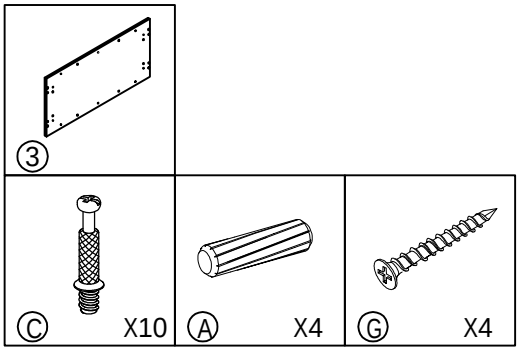

Assemble the bottom shelves ③ as shown.

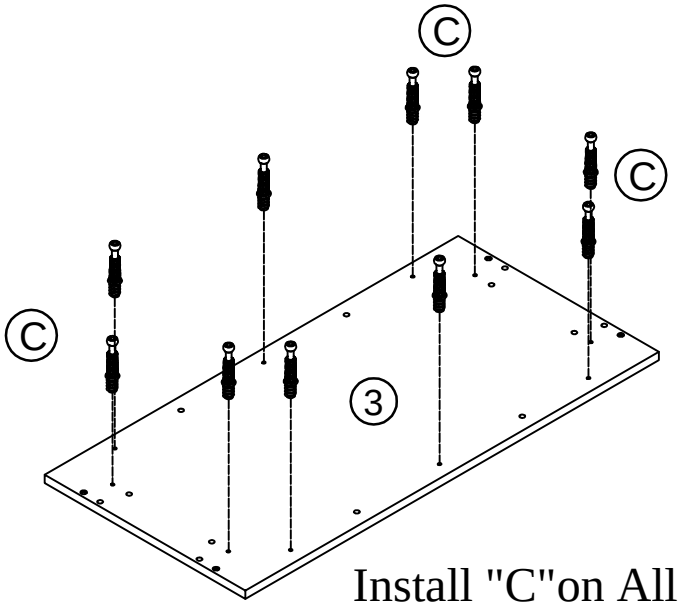

Install "C"on All Small Holes

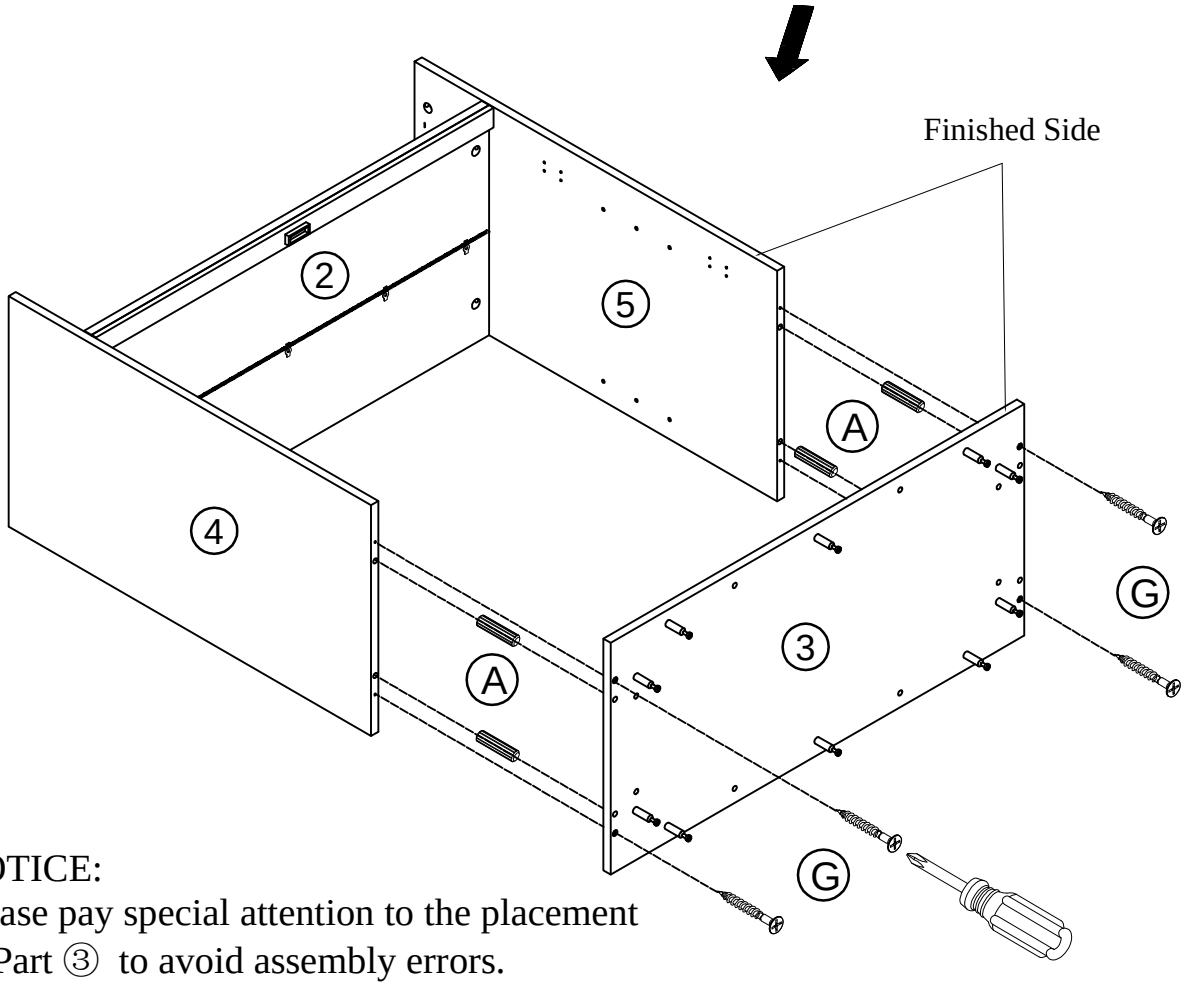

NOTICE:
Please pay special attention to the placement of Part ③ to avoid assembly errors.
The side with the "C" should face outward, and the Finished side should face upward.

STEP 6

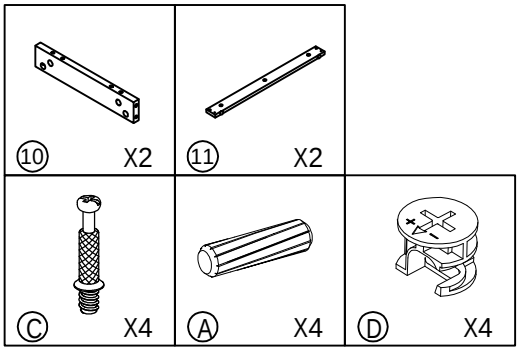

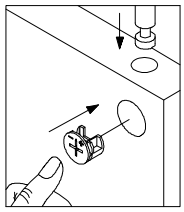

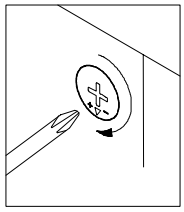

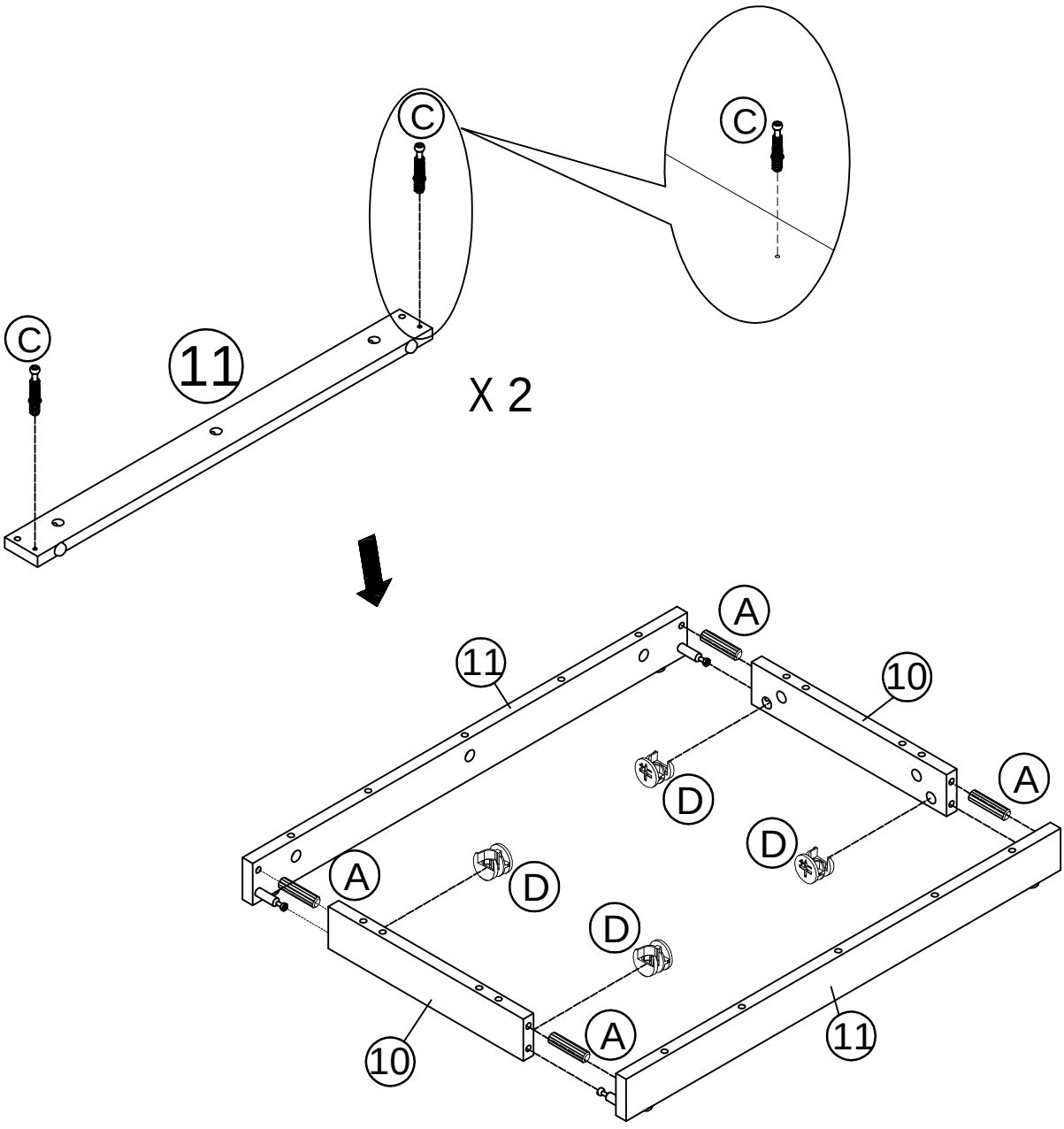

STEP 7

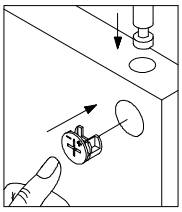

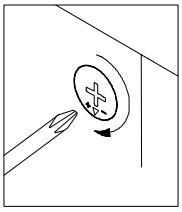

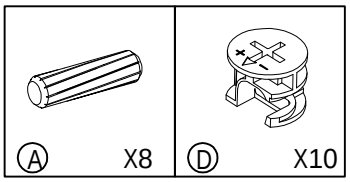

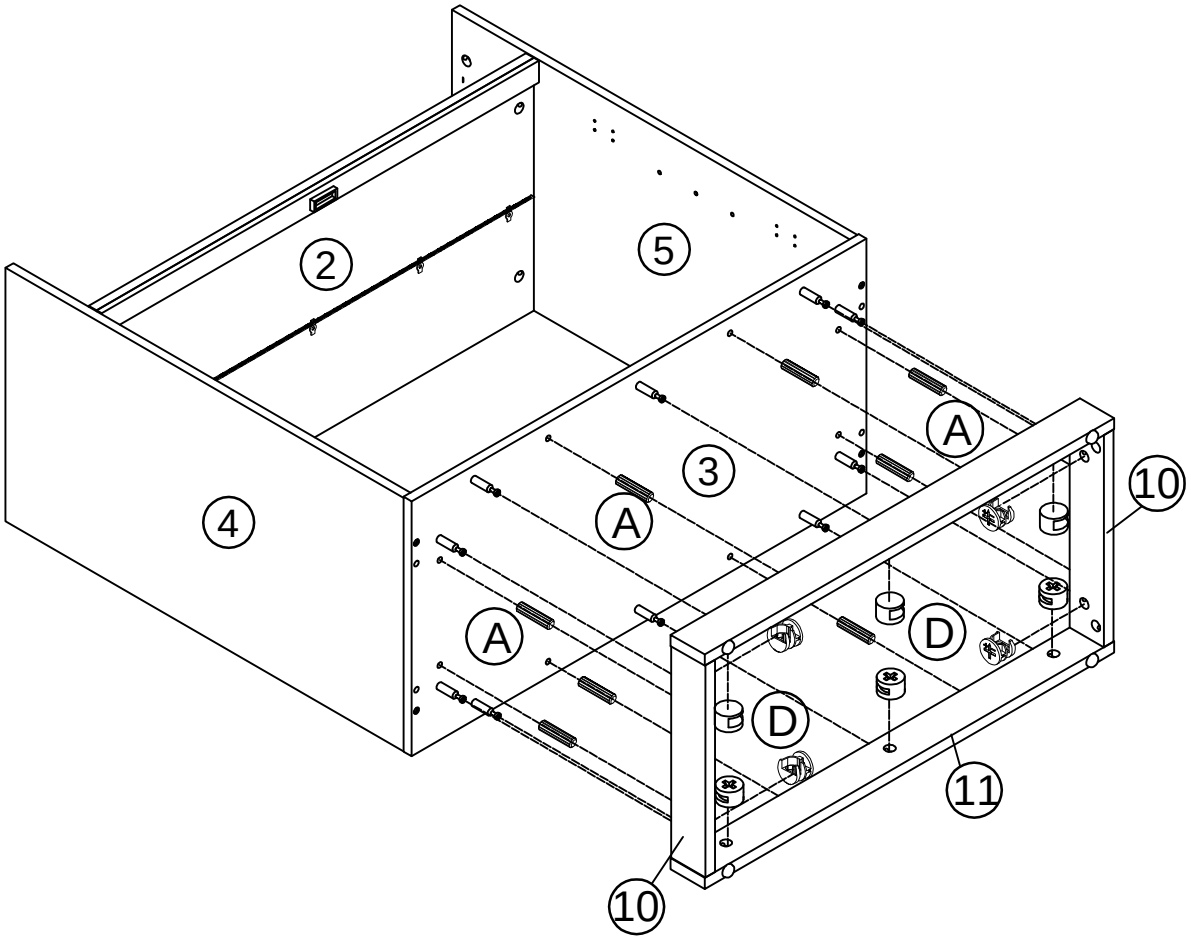

Attach the base to the bottom of the cabinet body.
Put A into the bigger holes in the board ③, then use D to lock

STEP 8

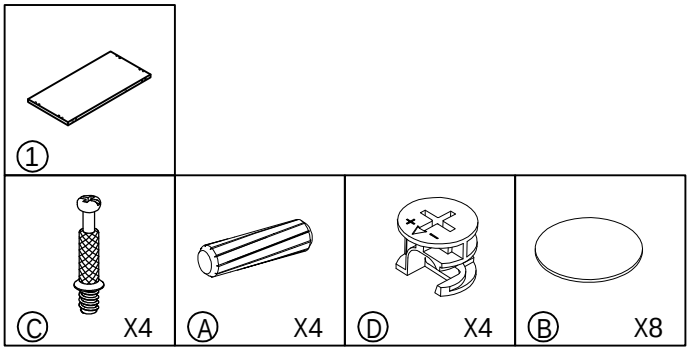

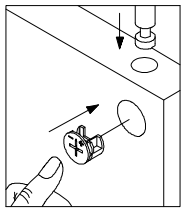

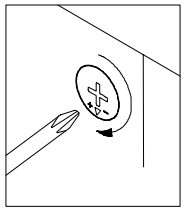

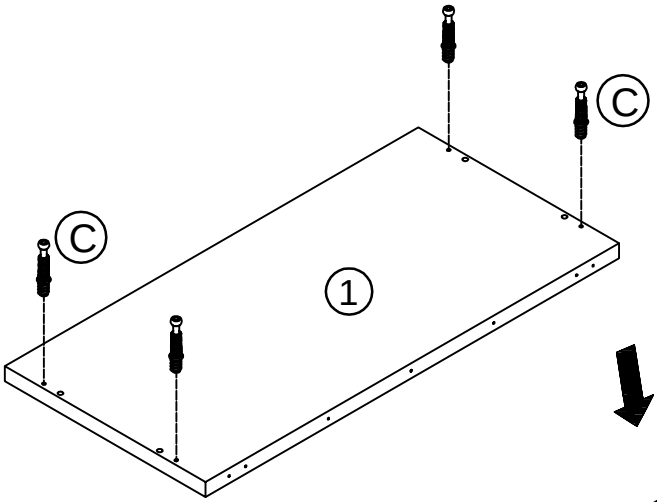

The pilot holes facing back side

Back side

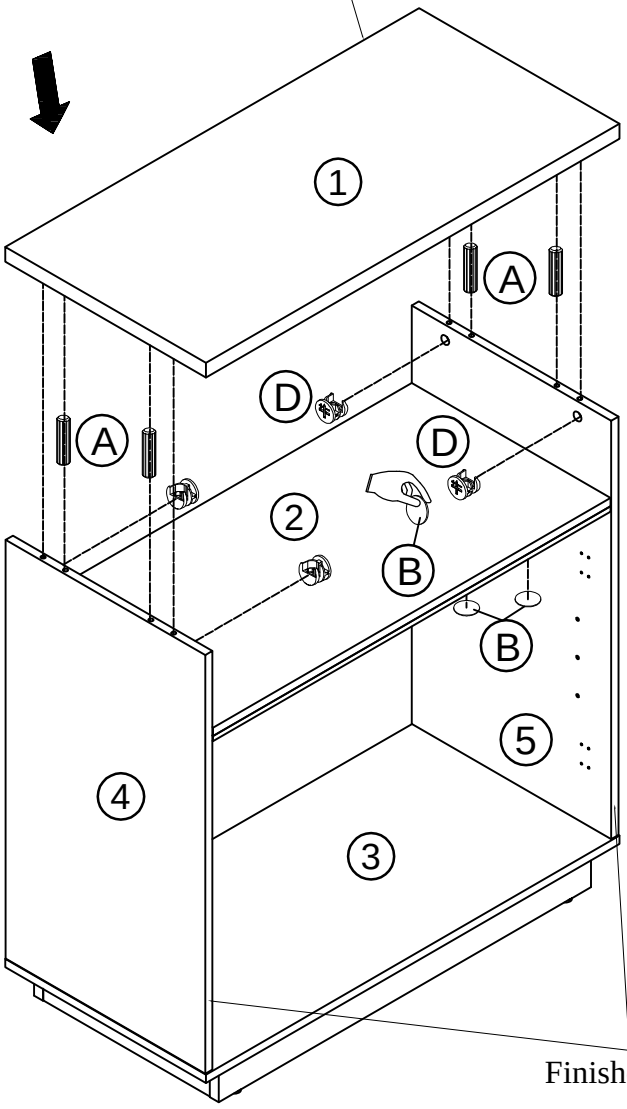

Finished Side

STEP 9

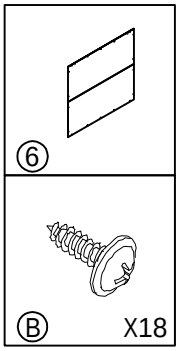

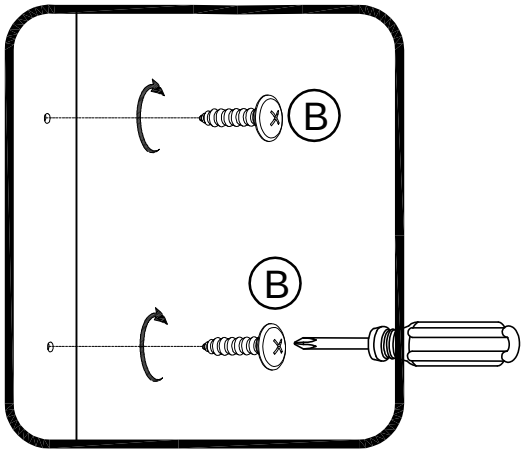

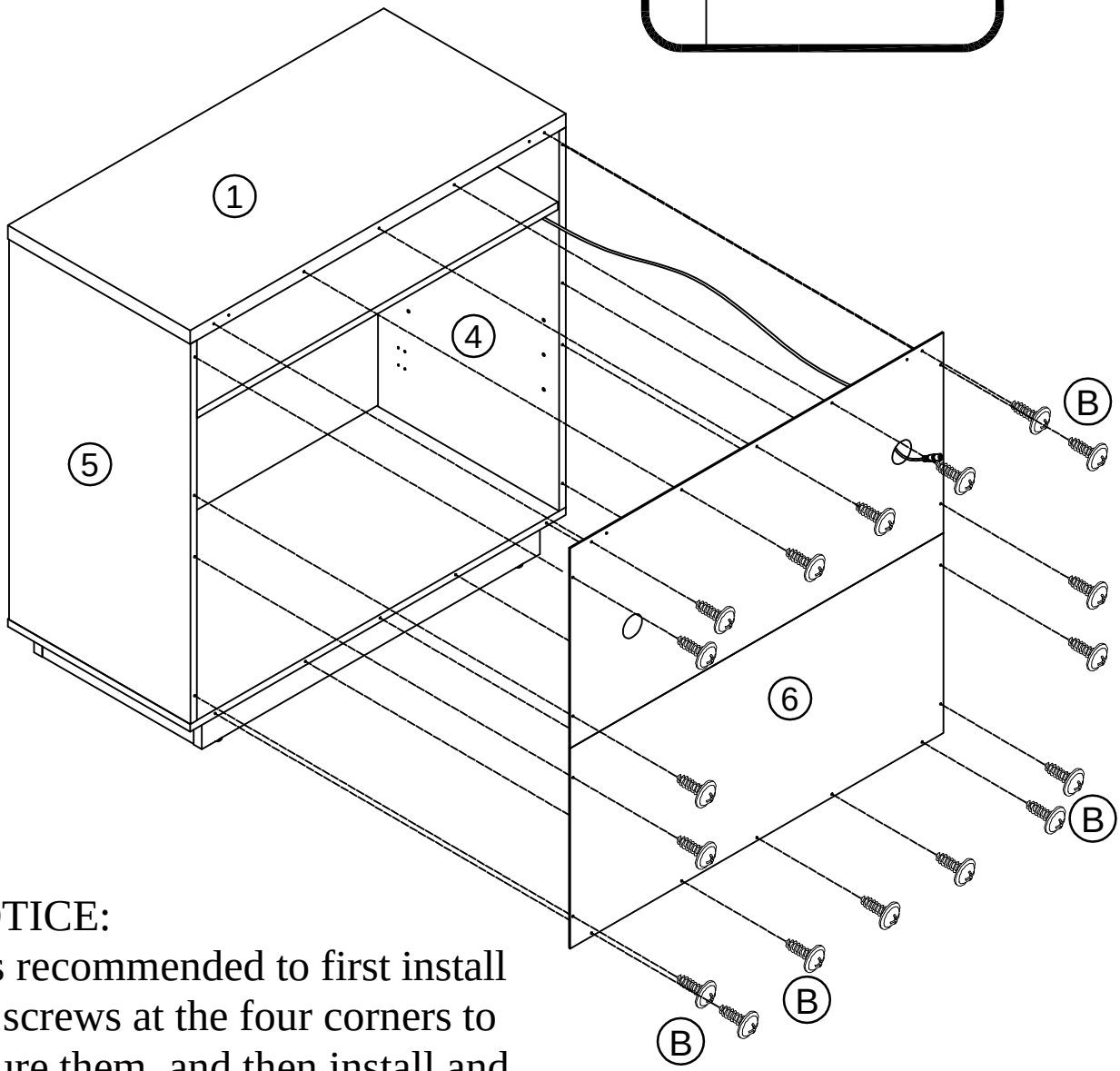

NOTICE:
It is recommended to first install the screws at the four corners to secure them, and then install and tighten them uniformly.

STEP 10

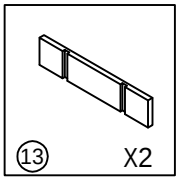

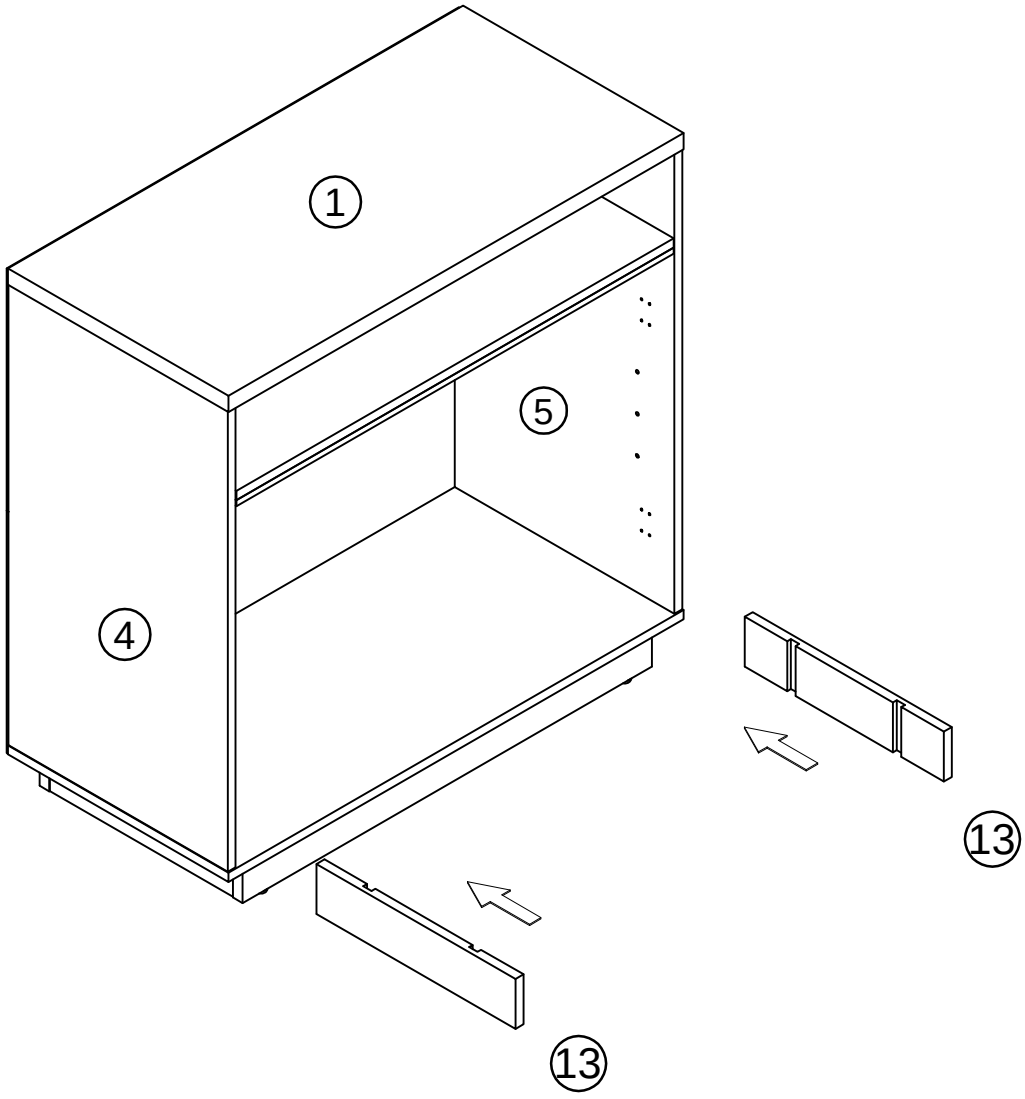

STEP 11

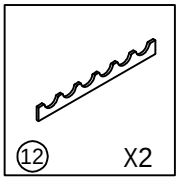

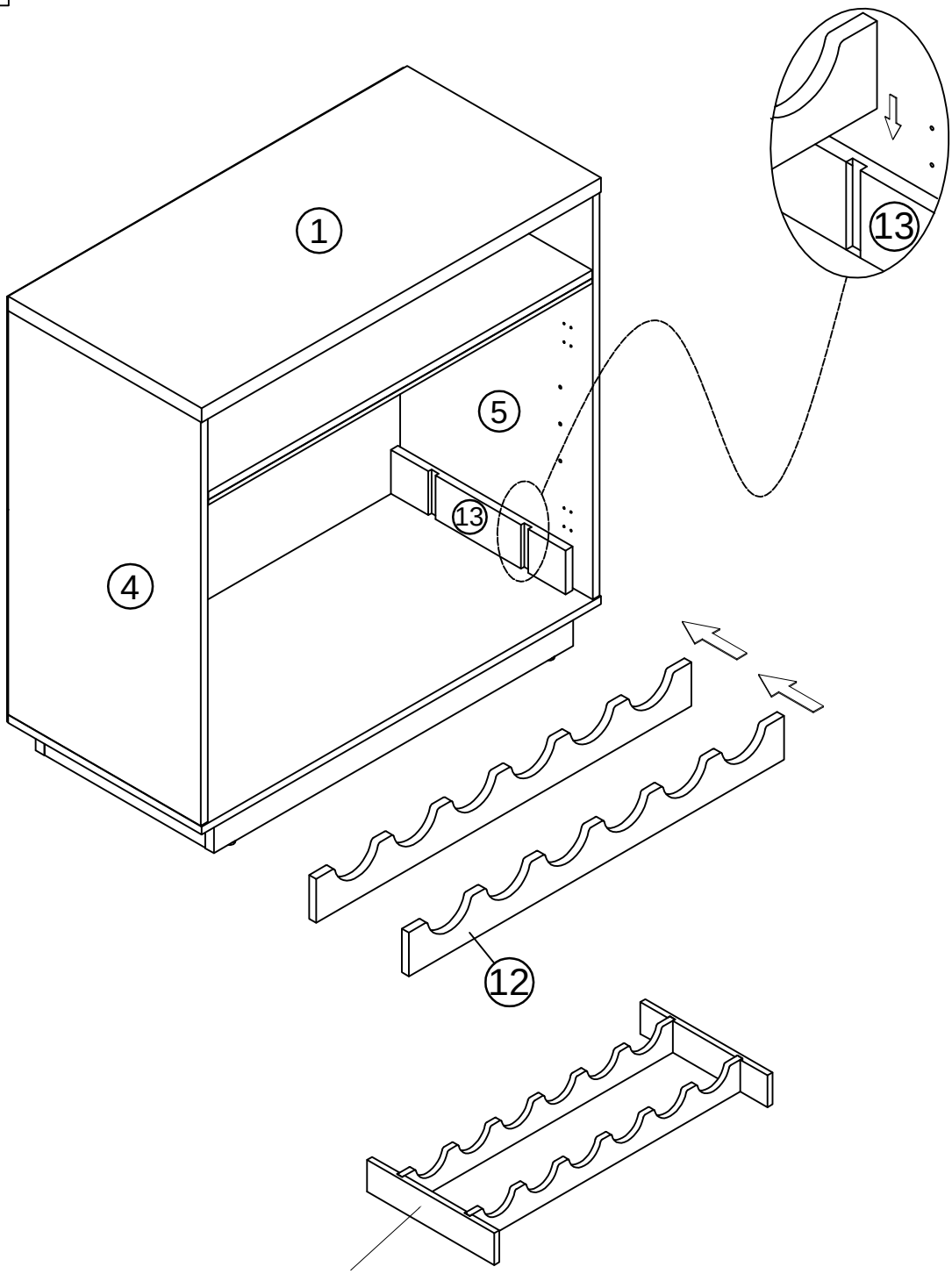

This wine rack has been installed according to your requirements.
If you don't need it, please save it for future use.

STEP 12

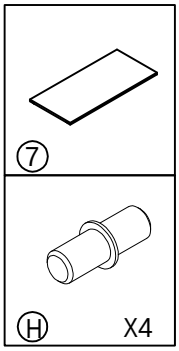

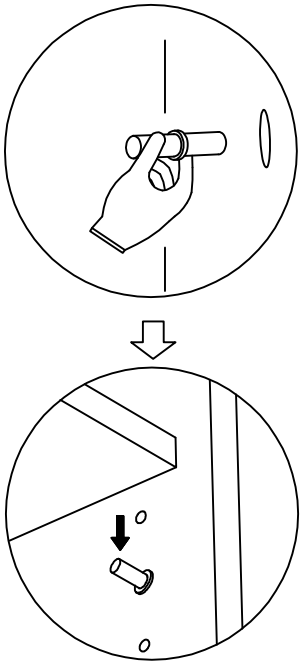

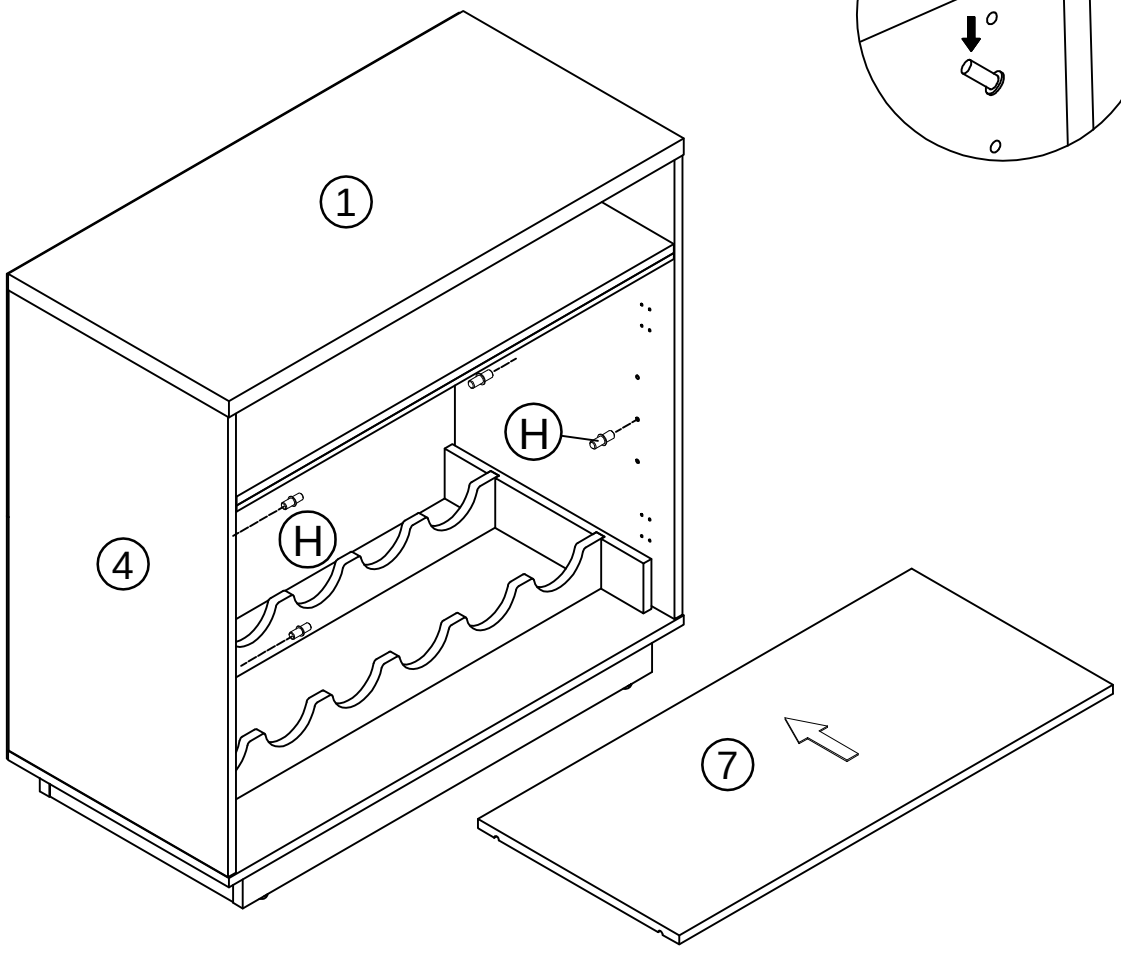

STEP 13

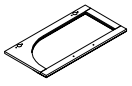 ⑧	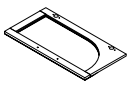 ⑨		
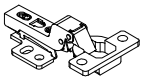 Ⓙ X4	 Ⓘ X8	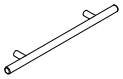 Ⓚ X2	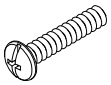 Ⓛ X4

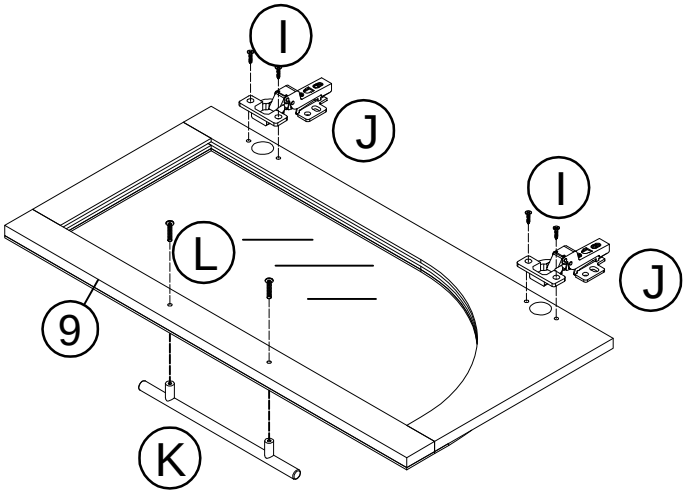

STEP 14

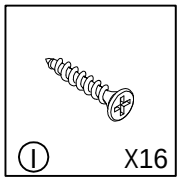

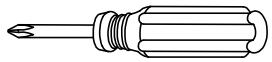

Philips
Screwdriver
(Not Included)

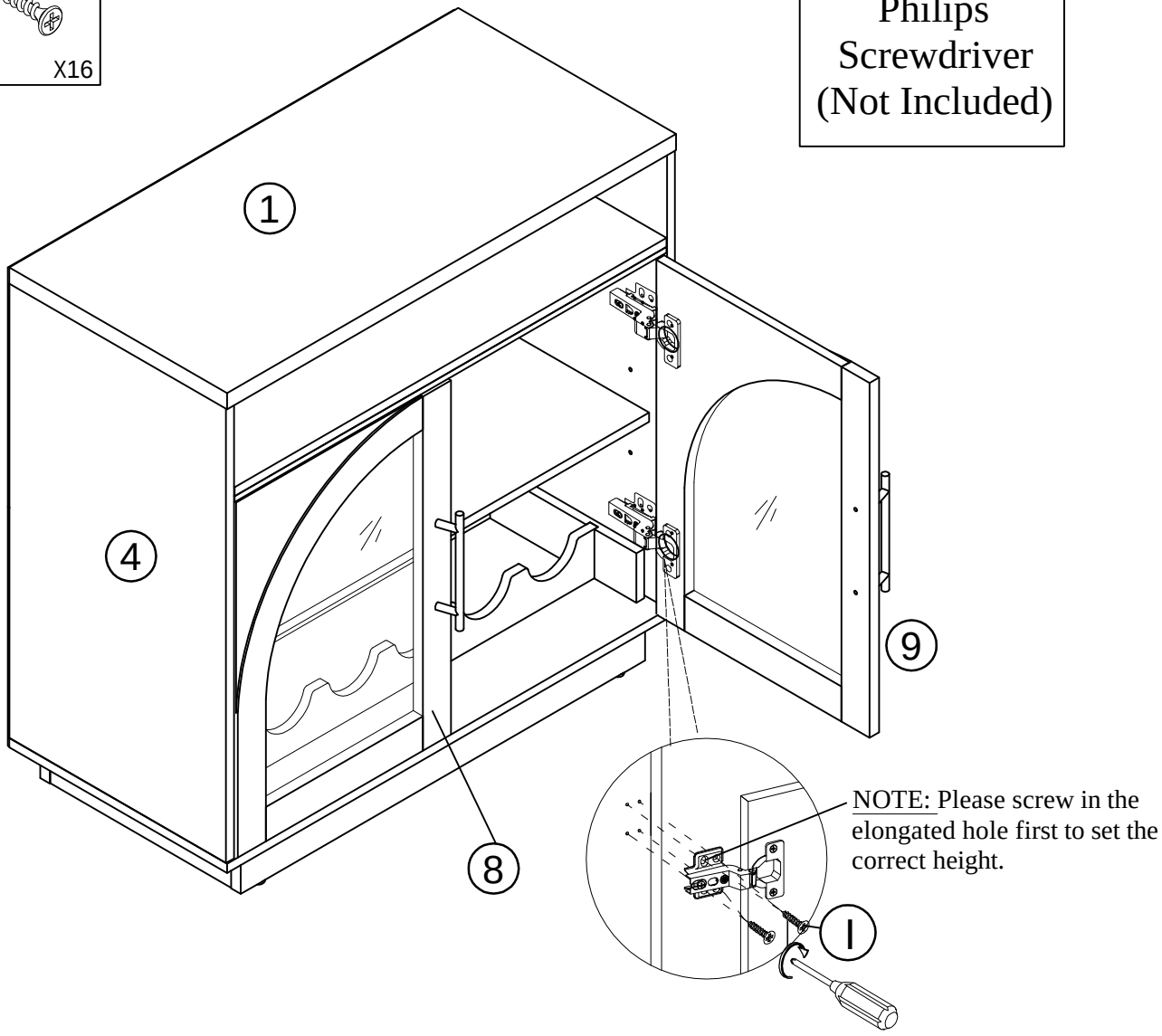

NOTE: Please screw in the elongated hole first to set the correct height.

How to adjust the European adjustable hinges on doors

Shipping may cause doors to go out of alignment. If you find that the doors need to be adjusted slightly, turn the appropriate screw as illustrated.

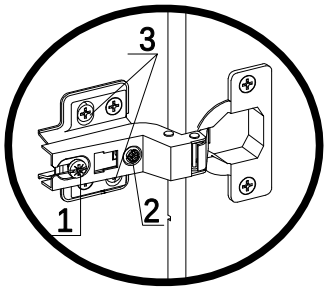

1. TO ADJUST DOOR FORWARD OR BACKWARD.
2. TO ADJUST DOOR TO RIGHT OR TO LEFT.
3. TO ADJUST DOOR UP OR DOWN.

STEP 15

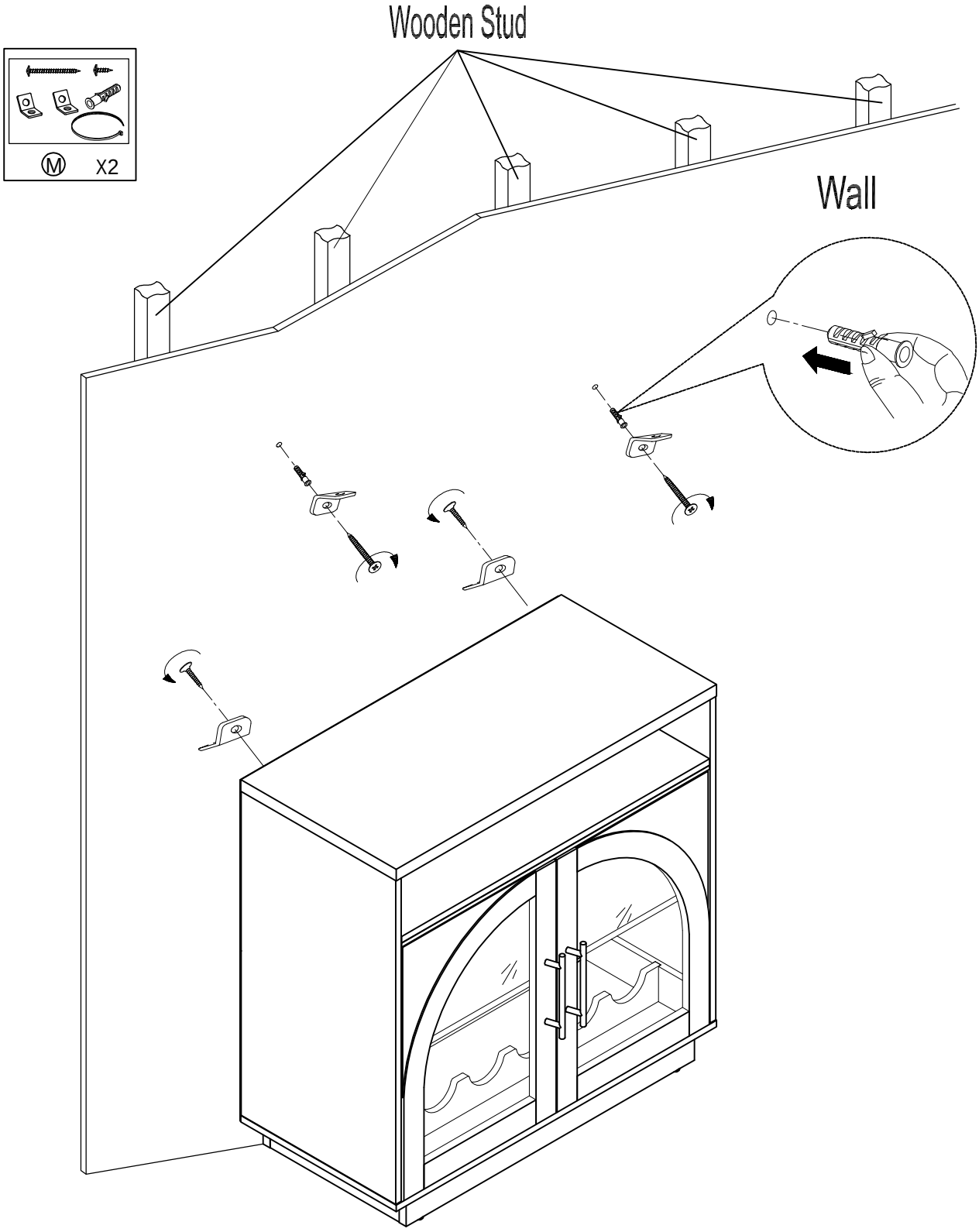

STEP 16

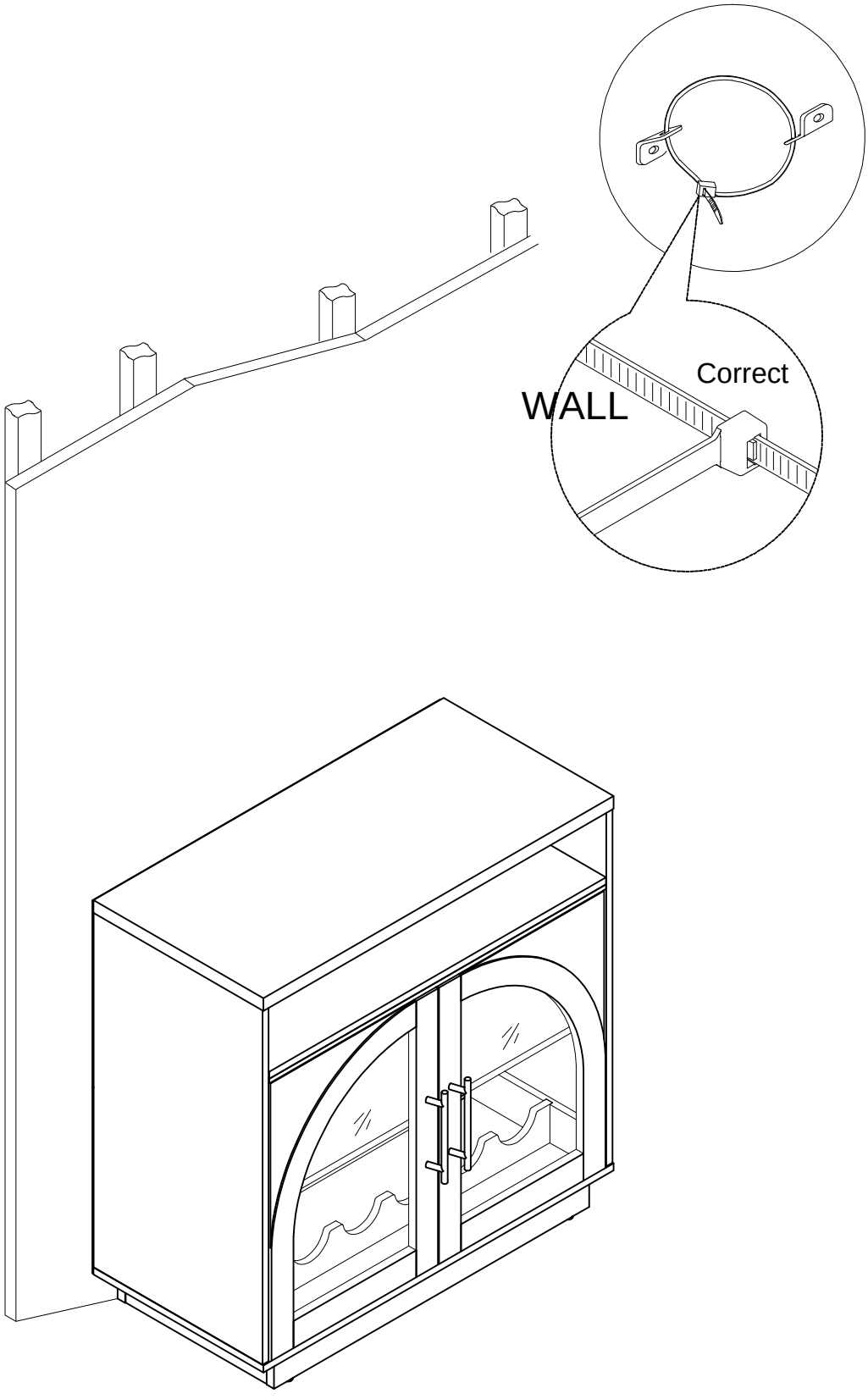

STEP 17

 Ⓞ X1	 Ⓟ X1	 Remote Control Ⓢ X1

NOTE: This Remote Control instruction is in this electrical package.

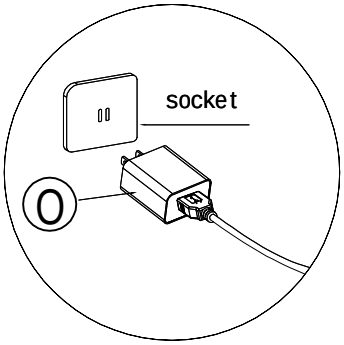

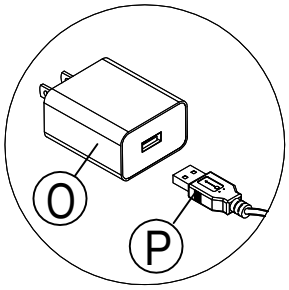

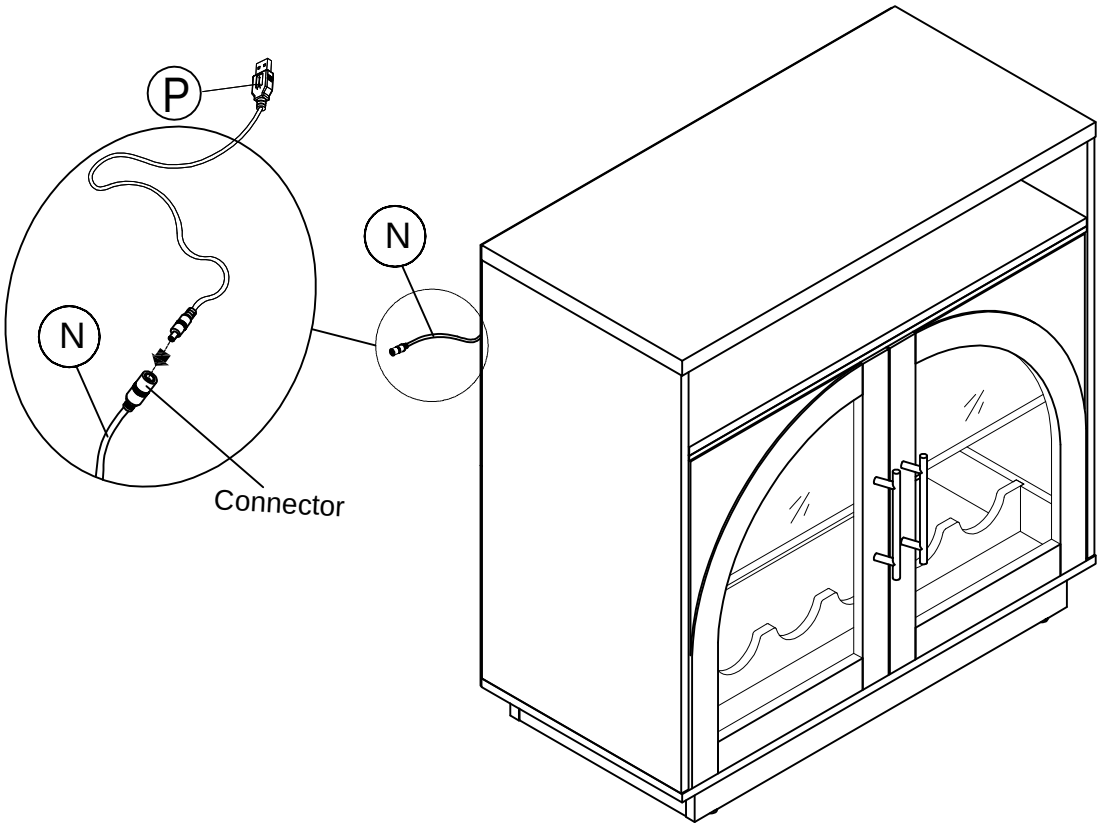

STEP 18

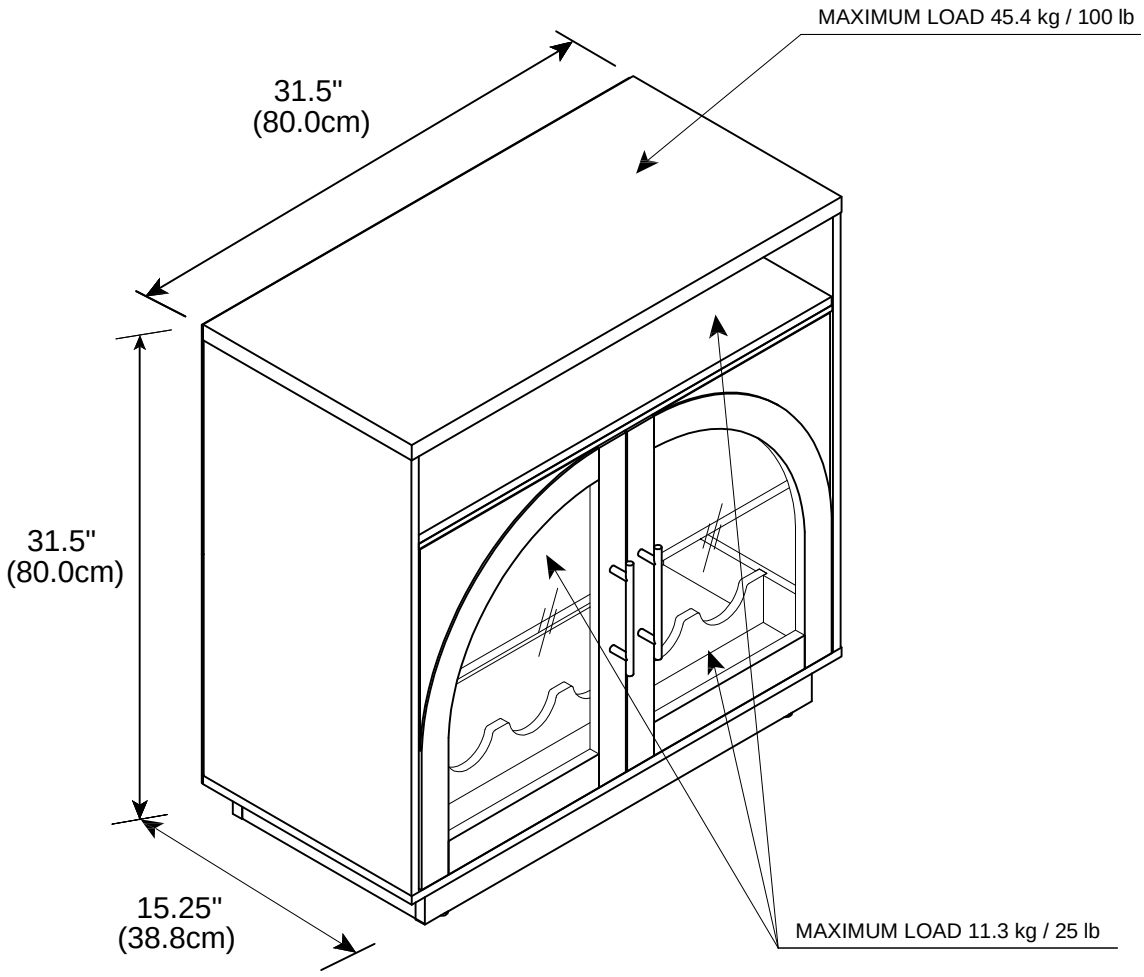

SPECIFICATIONS

ASSEMBLED DIMENSIONS(W x D x H)	31.5" x 15.25 " x 31.5"
	80.0 x 38.8 x 80.0 cm
MAXIMUM WEIGHT CAPACITY	Top: 100 lb