ARIEL

FREE STANDING TUB

CHELSEA 67" FREE STANDING ACRYLIC BATHTUB

MODEL: PS111-6730

Size 67"L x 29.6"W x 23.7"H

Features

- 100% Glossy White Acrylic
- Drain and Overflow Included
- Effective capacity: 86.1 Gal
- Drain Location: Center
- Drain Diameter: 1.5"
- Certification: cUPC
- Corrosion Resistant: EN263-2008
- Shape: Rectangle
- Not Include Faucet



SPECIFICATIONS

FRONT VIEW



BACK VIEW

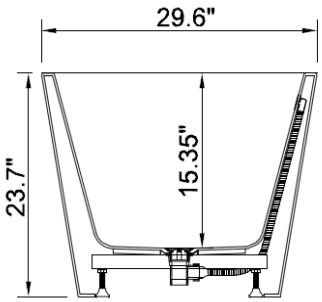

SIDE VIEW

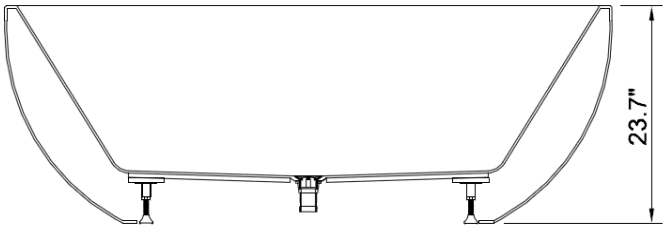

TOP VIEW

