KS3120,1,2,3,7,8RX
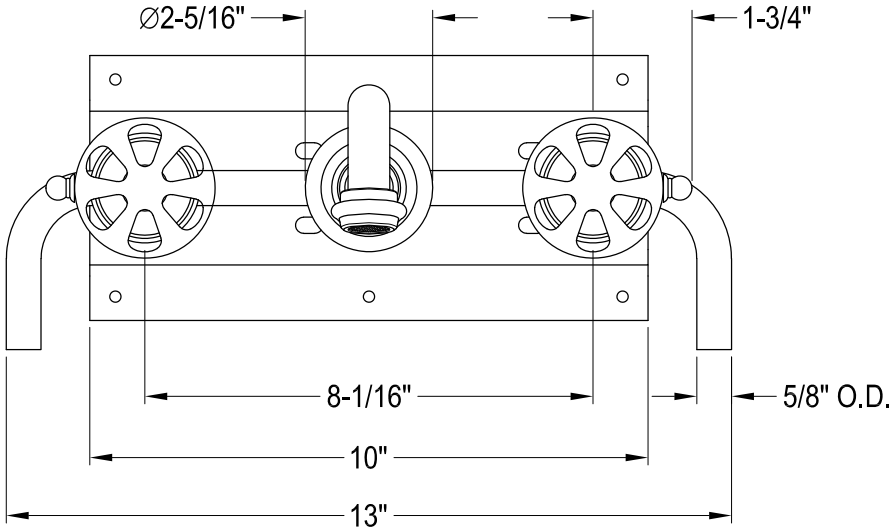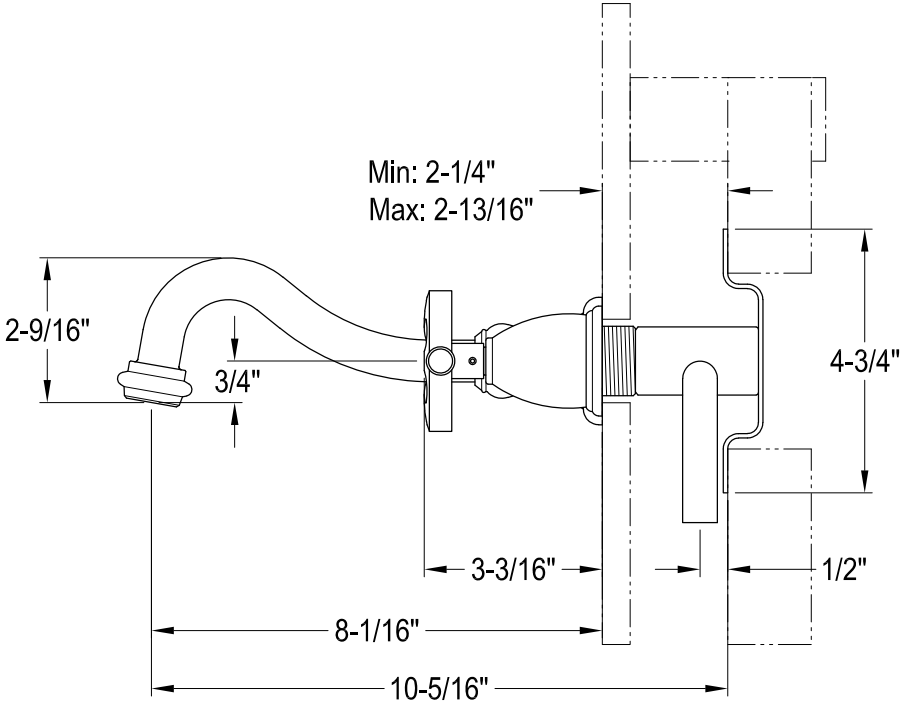
Twin Handles Wall Mount Bathroom Faucet