A*1

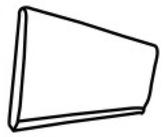

I*8

Φ8*Φ13mm

B*1

J*2

Φ6*Φ13mm

C*1

K*8

L*1

M8

D*1

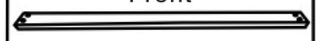

M*1

M6

E*4

M8*60MM

N*4

F*8

M8*60MM

O*1

G*2

M6*60MM

H*4

Φ8*Φ22mm

1

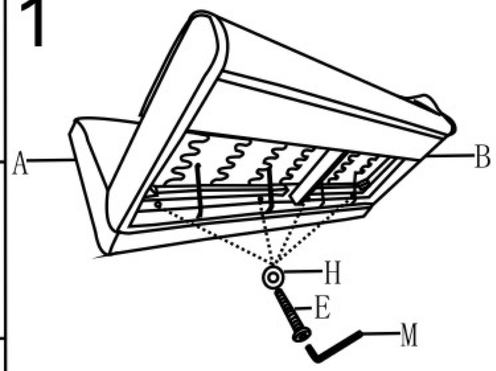

Please do tighten bolts 100%

2

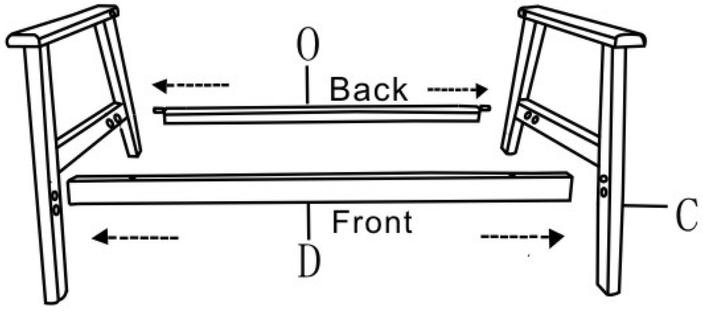

3

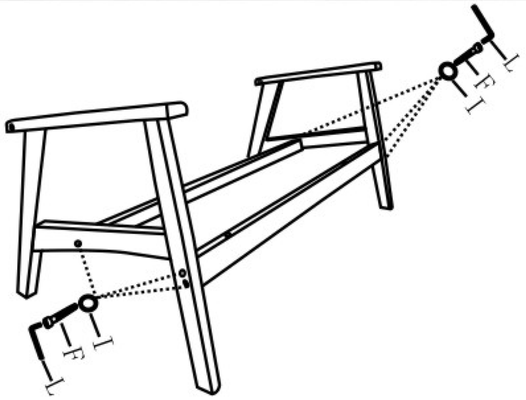

Please do tighten bolts 50%

4

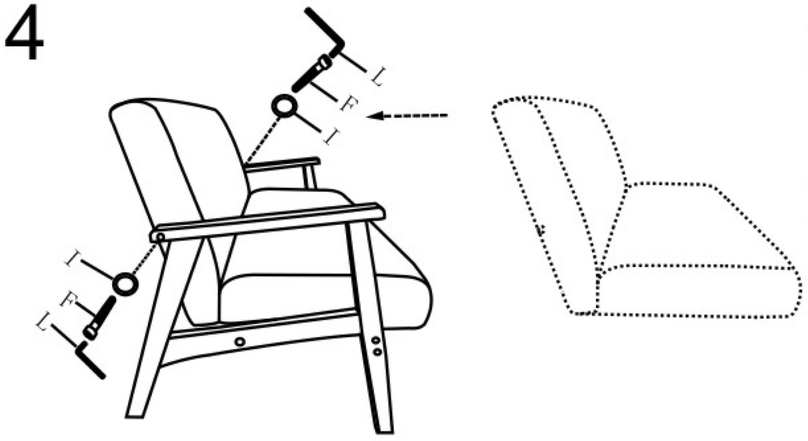

Please do tighten bolts 50%

5

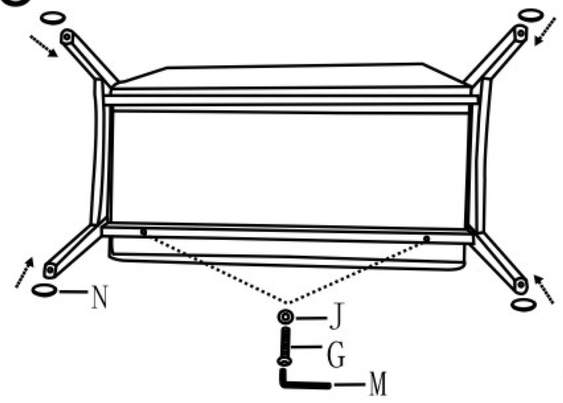

Please do tighten bolts 50%

6

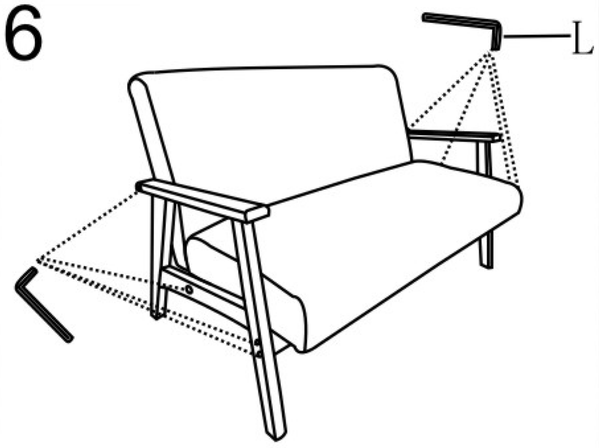

Please do tighten bolts 100%

7

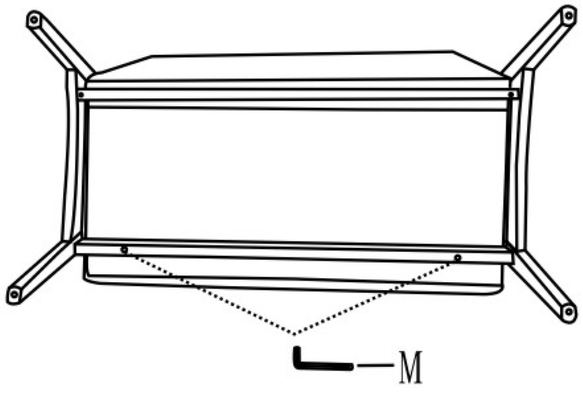

Please do tighten bolts 100%

8

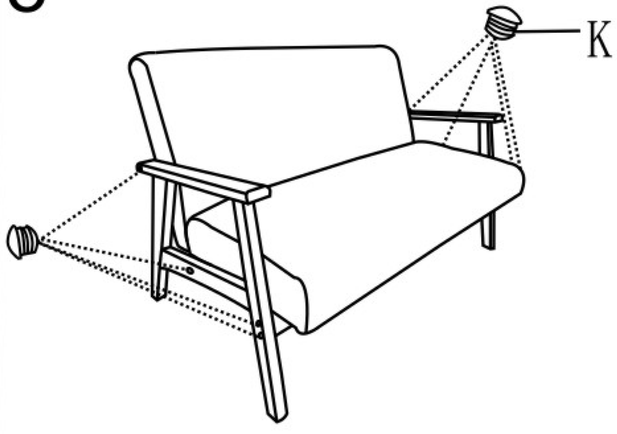
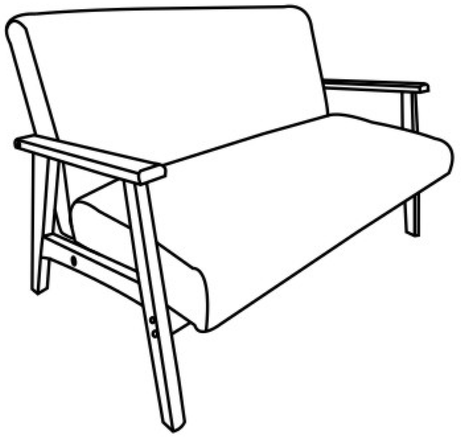
9