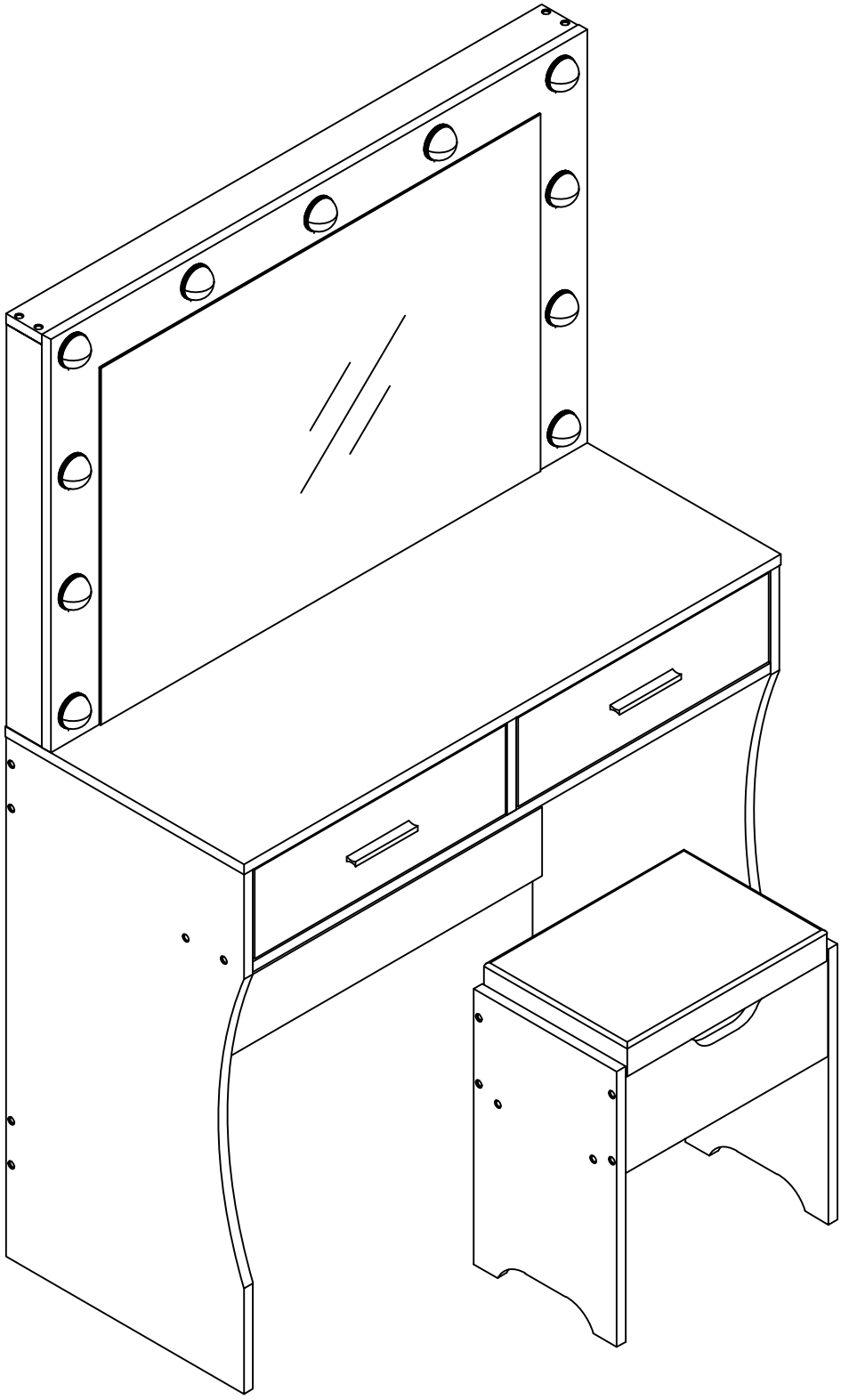

WARNING!

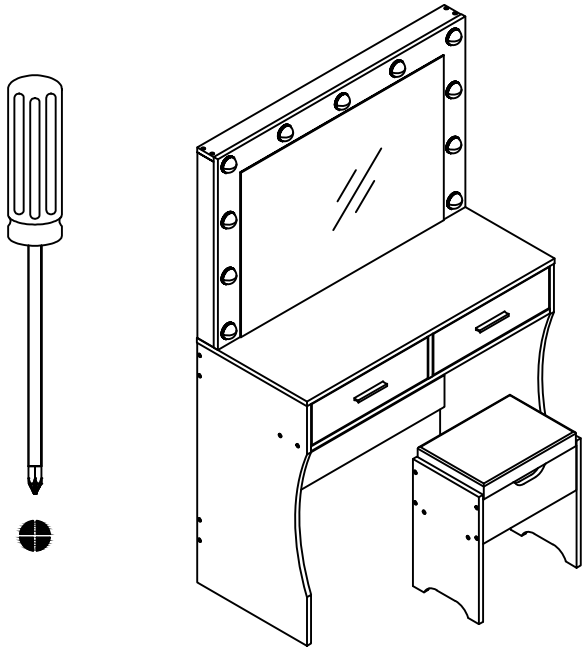

Estimated Time for Assembly

60 mins

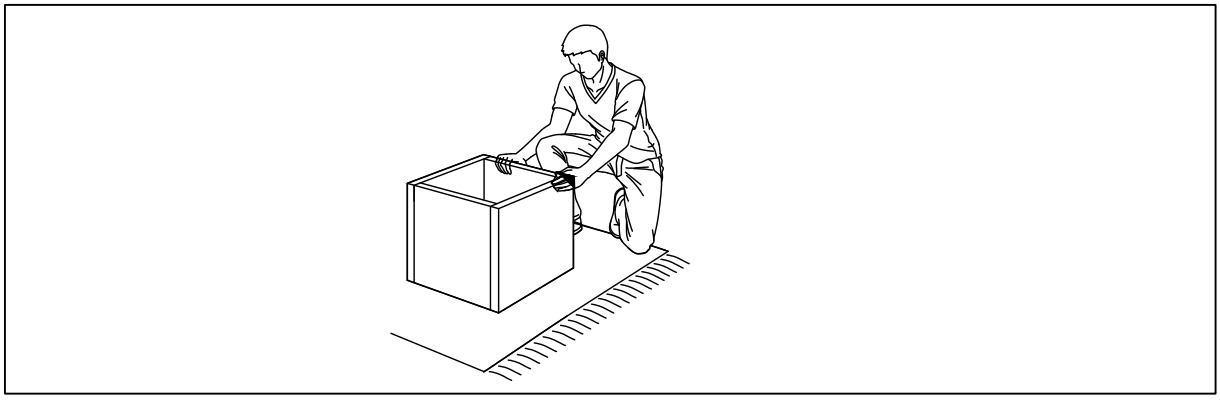

Assembly the furniture on empty carton, carpet, or rug to prevent scratches or damage.

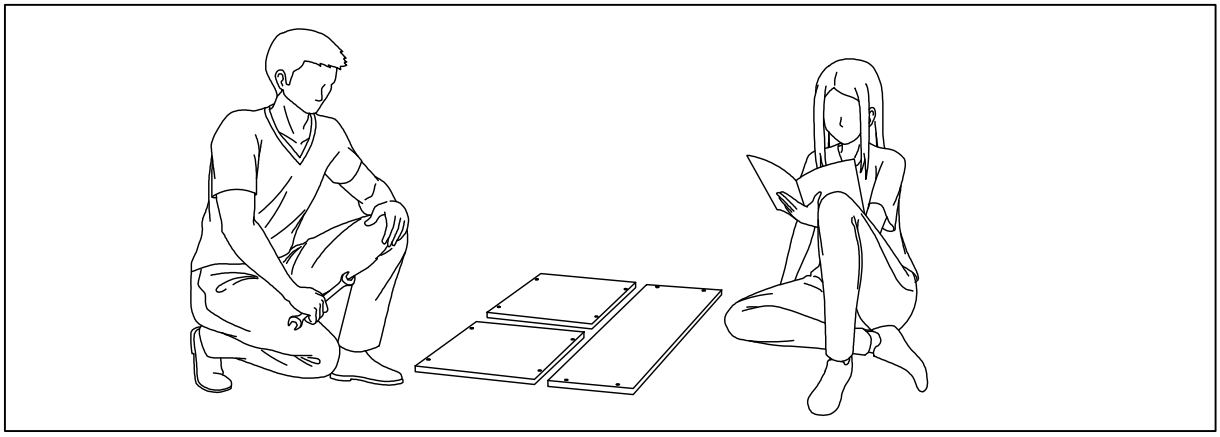

This furniture requires 2 people to assembly.

Make sure no parts are missing or damaged before assembly.

BOARD IDENTIFICATION

Not actual size

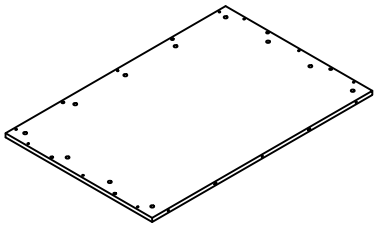

① X1

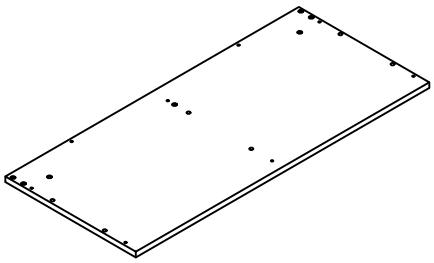

② X1

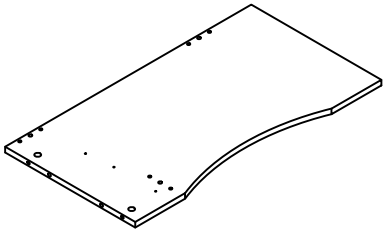

③ X1

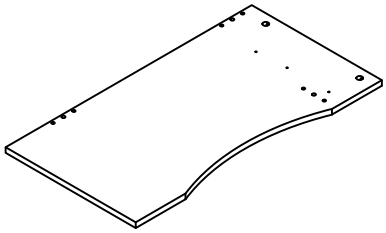

④ X1

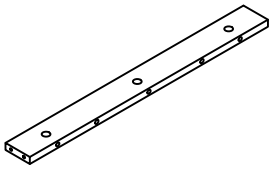

⑤ X2

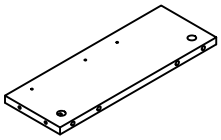

⑥ X1

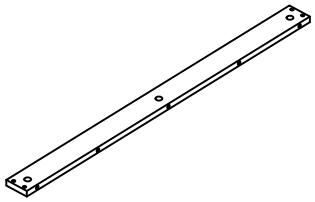

⑦ X1

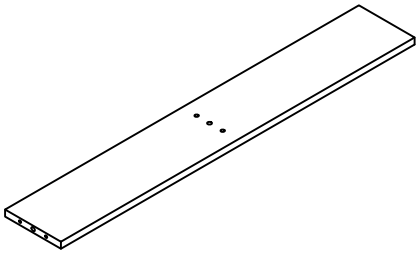

⑧ X1

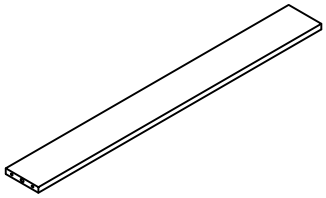

⑨ X1

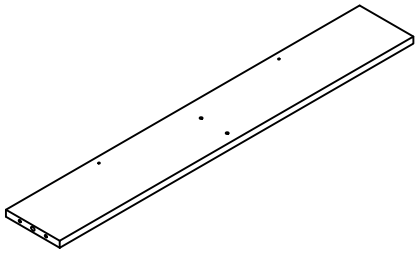

⑩ X1

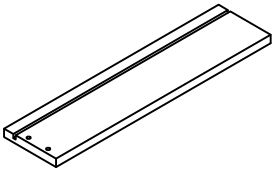

⑪ X2

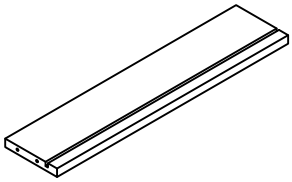

⑫ X2

BOARD IDENTIFICATION

Not actual size

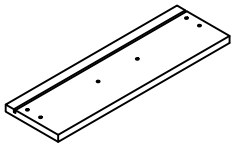

13 X2

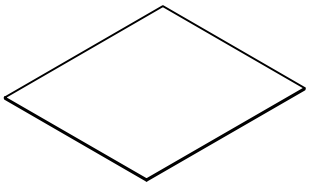

14 X2

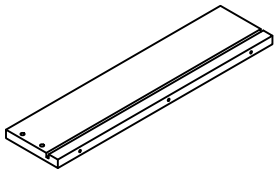

15 X2

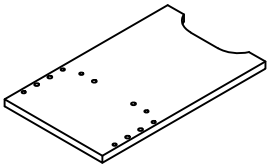

16 X2

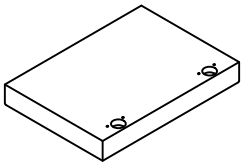

17 X1

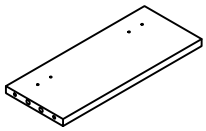

18 X1

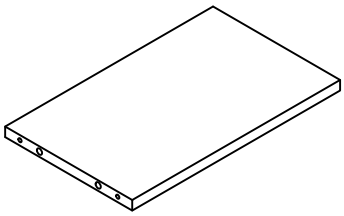

19 X1

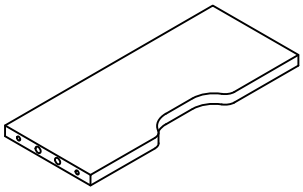

20 X1

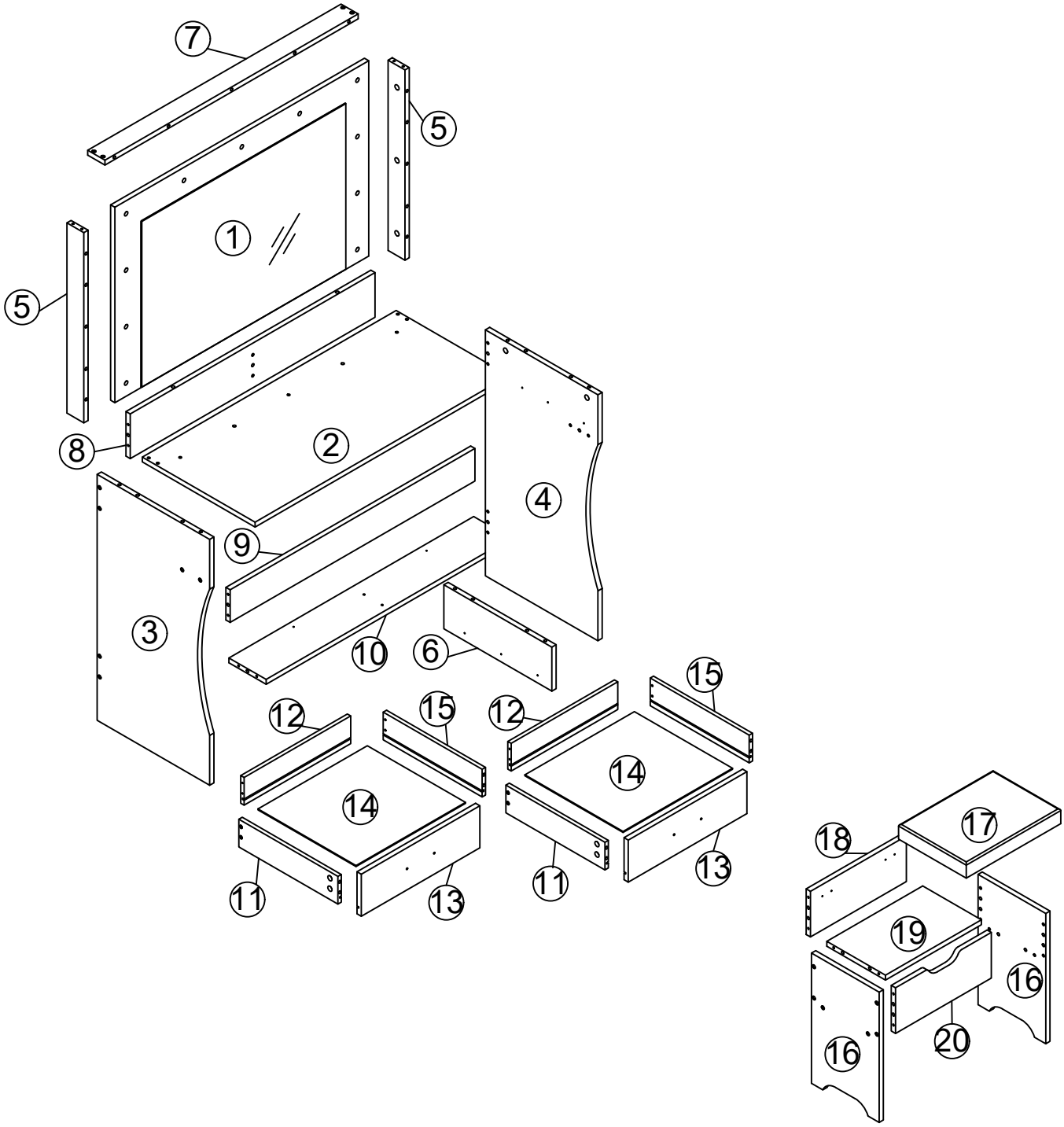
7
5
1
5
8
2
4
9
3
10
6
15
12
15
12
14
14
11
13
11
13
18
17
19
16
16
20

HARDWARE PART LIST

A	X25+1
ϕ15X9.5mm	

B	X25+1
ϕ6X34mm	

C	X4
M4*18mm	

D	X33+1
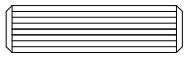	
ϕ8X30mm	

E	X35+1
ϕ5X40mm	

F	X12+1
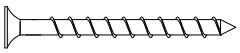	
ϕ4X35mm	

G	X12
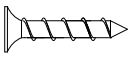	
ϕ3.5X15mm	

H	X26+1
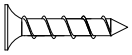	
ϕ3.5X12mm	

I	X2
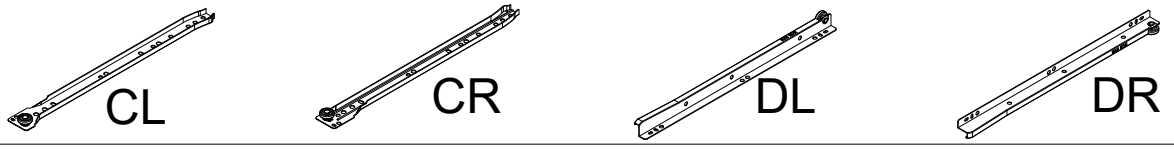	
350mm	

J	X1
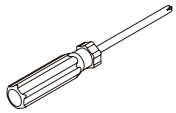	

K	X1set
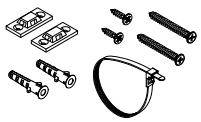	

L	X2
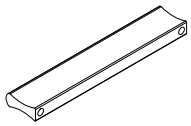	
106*8*16mm	

M	X2
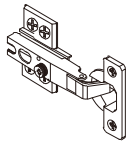	
ϕ35mm	

N	X2
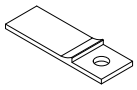	
50*16*4mm	

O	X11+1
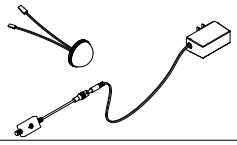	
ϕ48mm	

P	X1
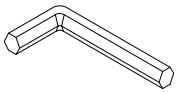	
4mm	

Cam Lock Fastening System

Insert the cam bolt into the hole first, then insert the cam lock and lock it.

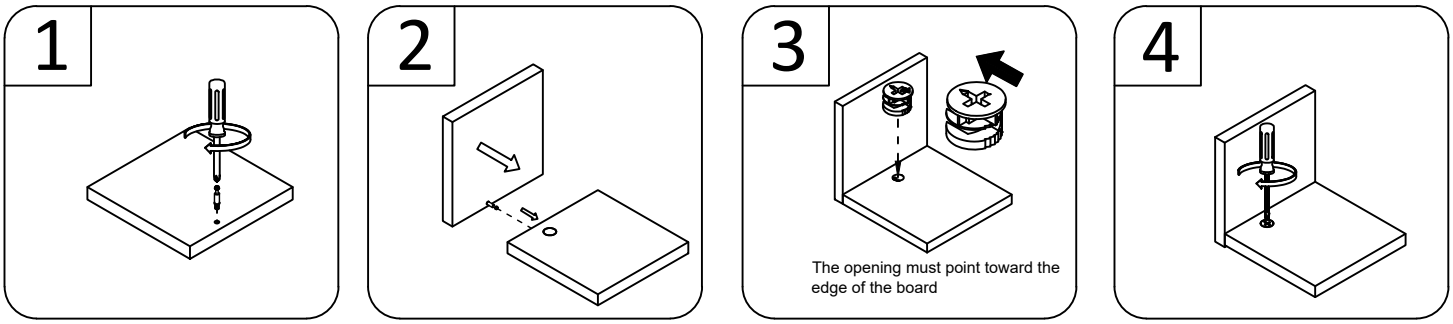

STEP 1

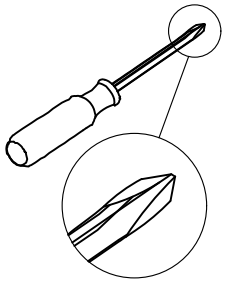

Ⓗ	X6
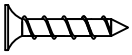	
ϕ3.5*12	

Ⓘ	X1
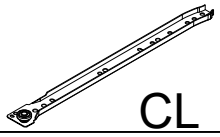 CL	
L=350	

Ⓘ	X1
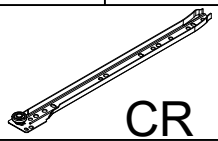 CR	
L=350	

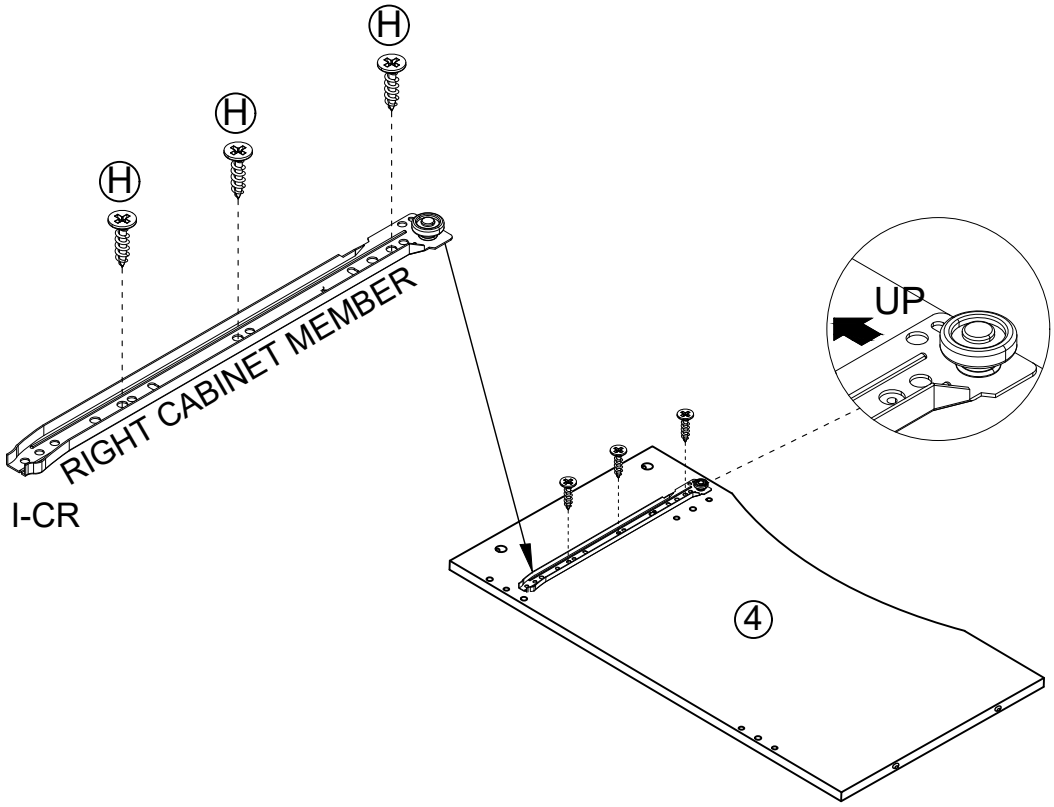

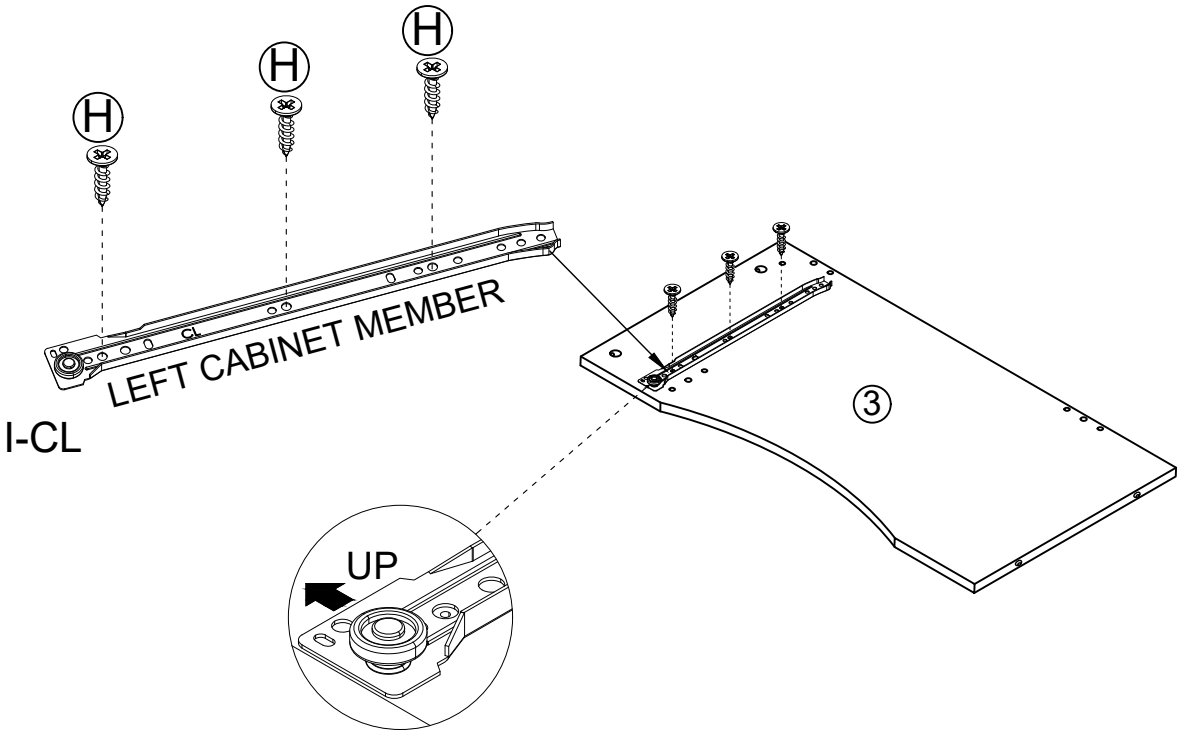

STEP 2

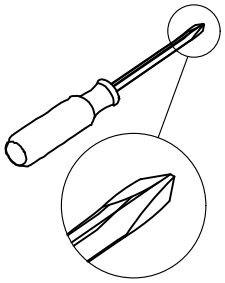

Ⓗ	X6
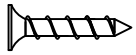	
ϕ3.5*12	

Ⓘ	X1
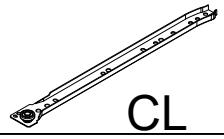 CL	
L=350	

Ⓘ	X1
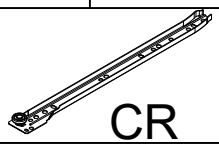 CR	
L=350	

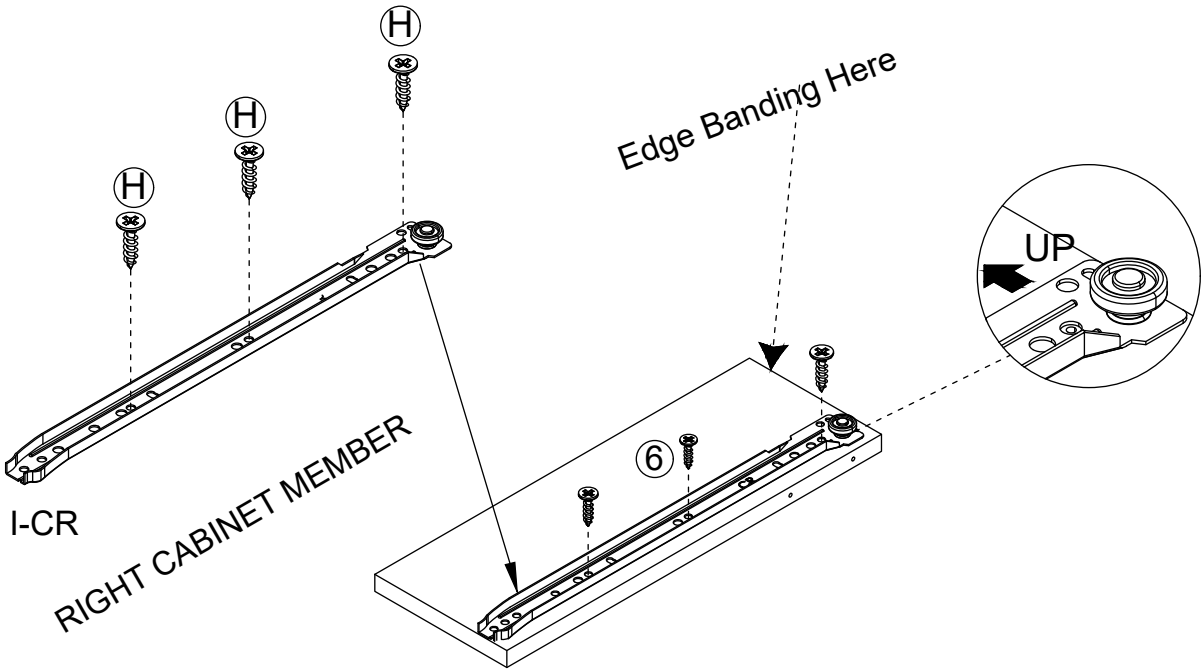

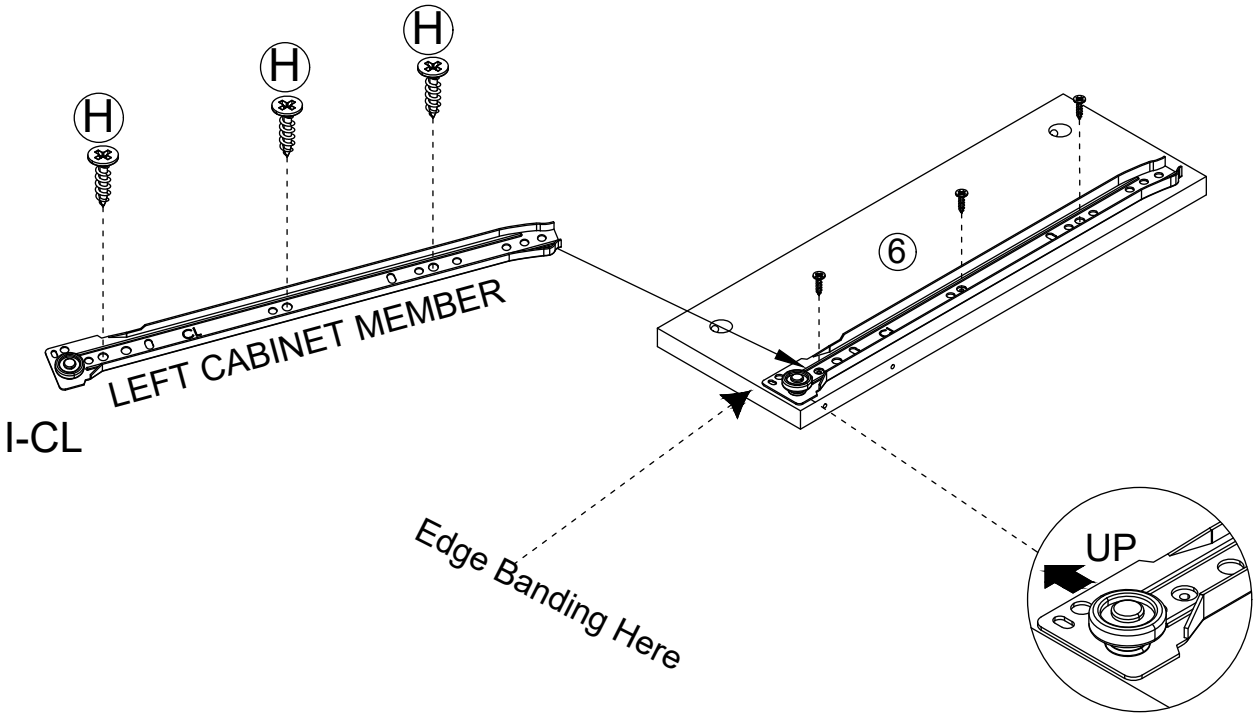

STEP 3

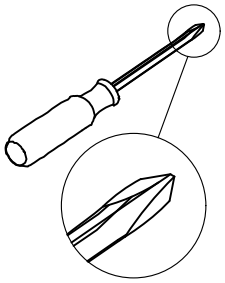

Ⓓ	X1
ϕ8X30mm	

Ⓕ	X4
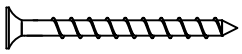	
ϕ4X35mm	

Ⓗ	X2
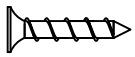	
ϕ3.5*12	

Ⓝ	X2
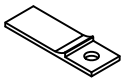	
50*16*4mm	

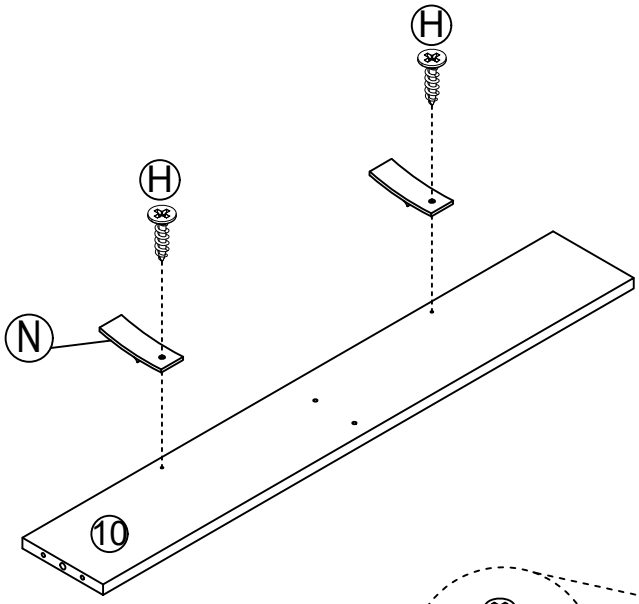

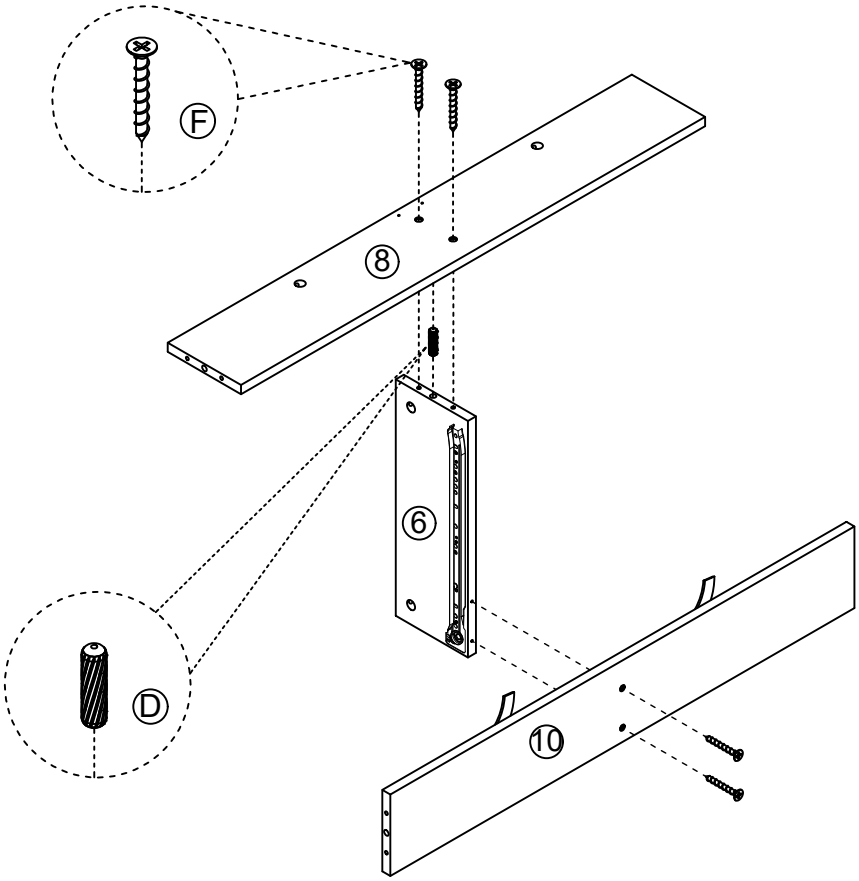

STEP 4

Ⓓ	X6
ϕ8X30mm	

Ⓔ	X12
ϕ5X40mm	

Ⓟ	X1
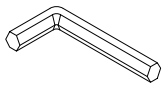	
4mm	

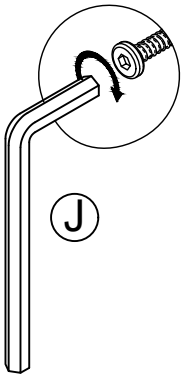

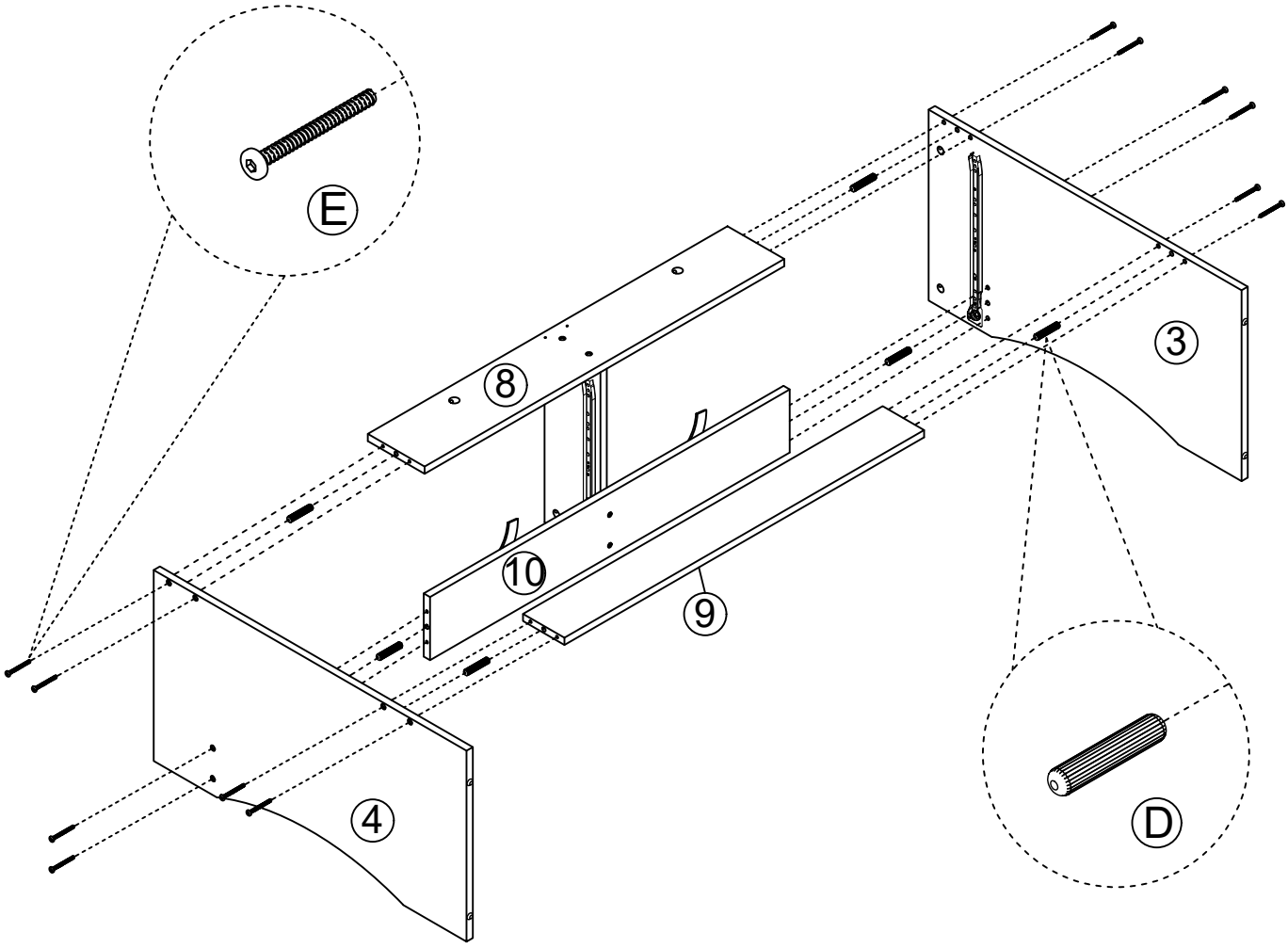

STEP 5

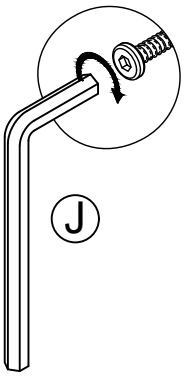

Ⓑ	X9
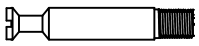	
ϕ6X35mm	

Ⓔ	X4
ϕ5X40mm	

Ⓟ	X1
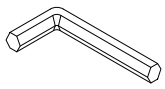	
4mm	

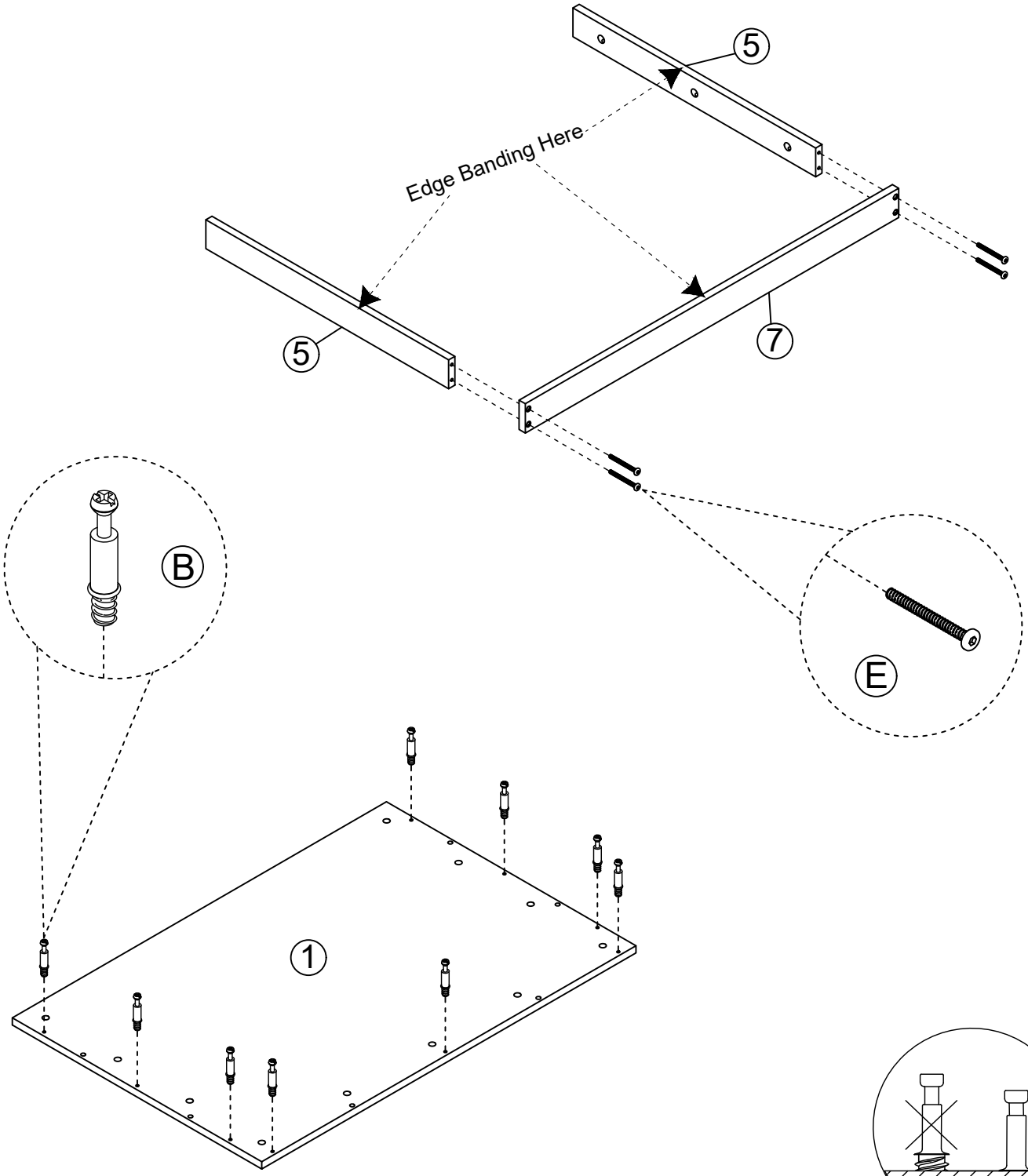

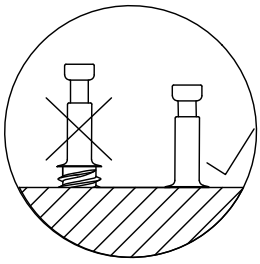

STEP 6

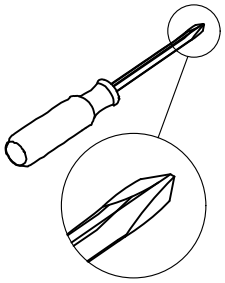

Ⓐ	X9
ϕ15X9.5mm	

Ⓓ	X6
ϕ8X30mm	

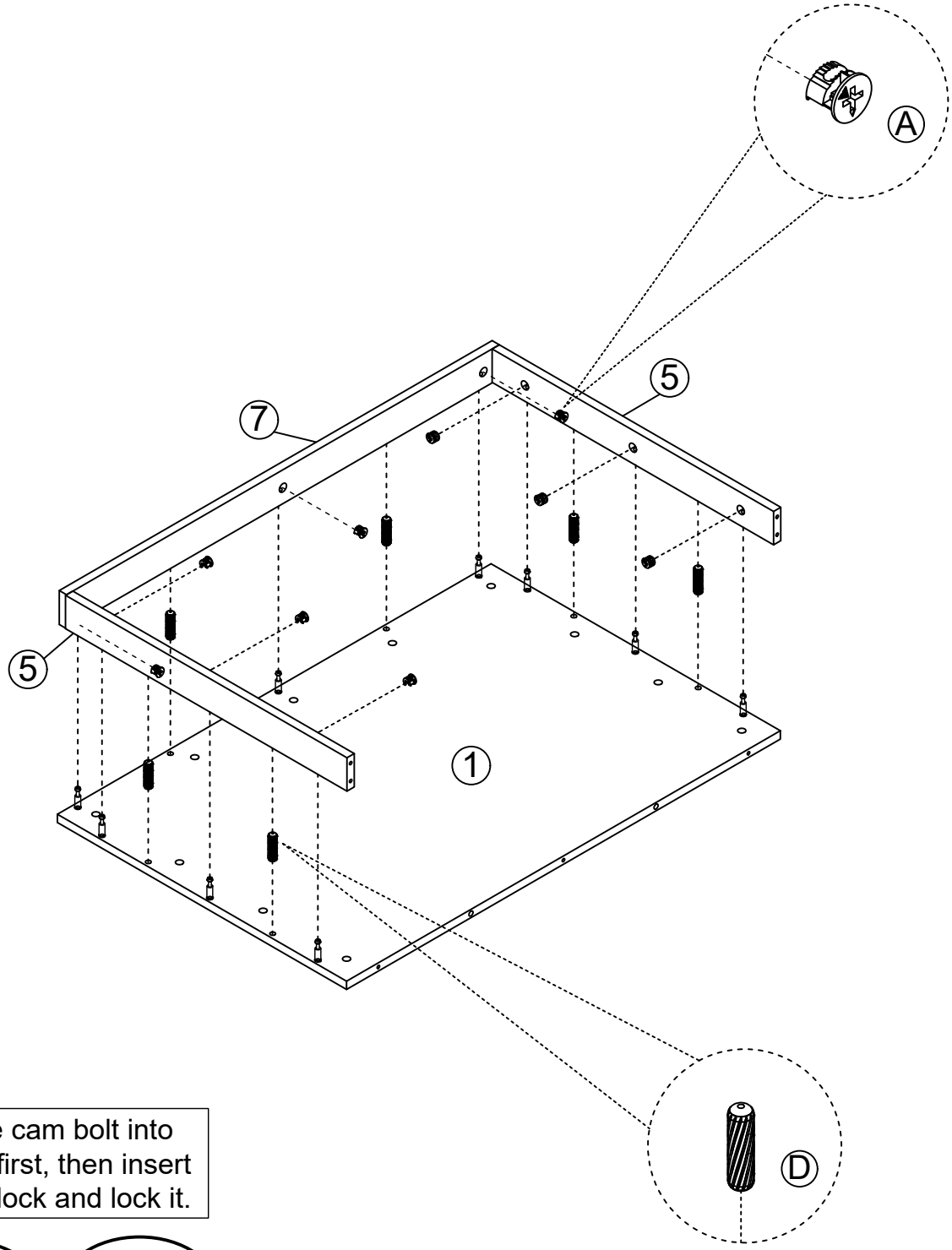

Insert the cam bolt into the hole first, then insert the cam lock and lock it.

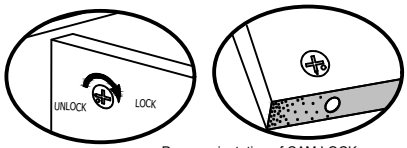

Proper orientation of CAM LOCK

STEP 7

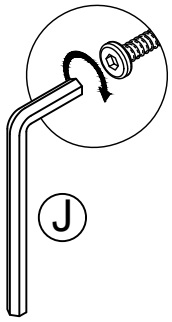

B	X8
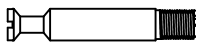	
ϕ6X35mm	

D	X2
ϕ8X30mm	

E	X7
ϕ5X40mm	

P	X1
4mm	

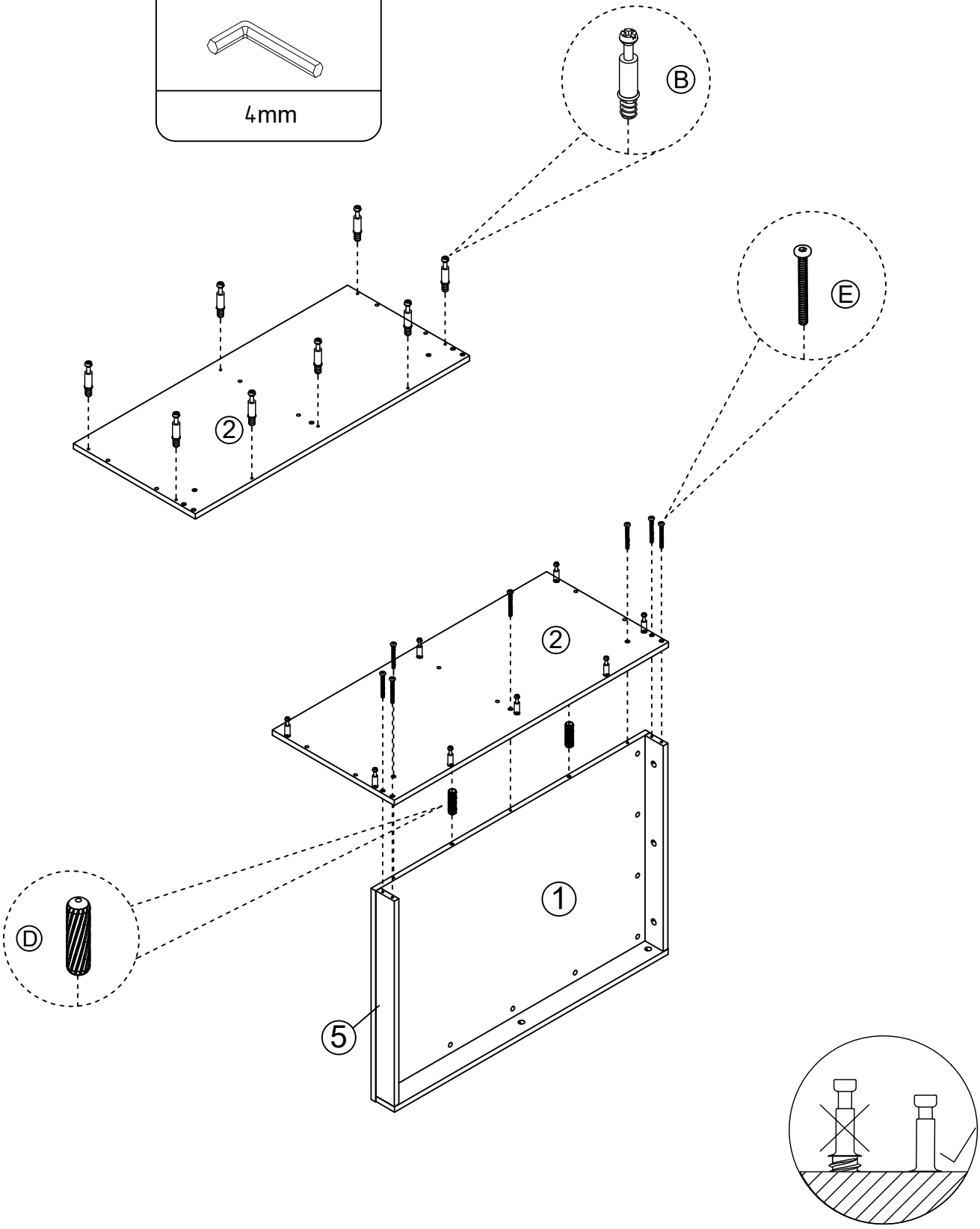

STEP 8

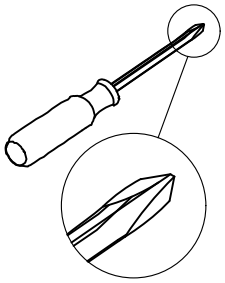

Ⓐ	X6
ϕ15X9.5mm	

Ⓓ	X6
ϕ8X30mm	

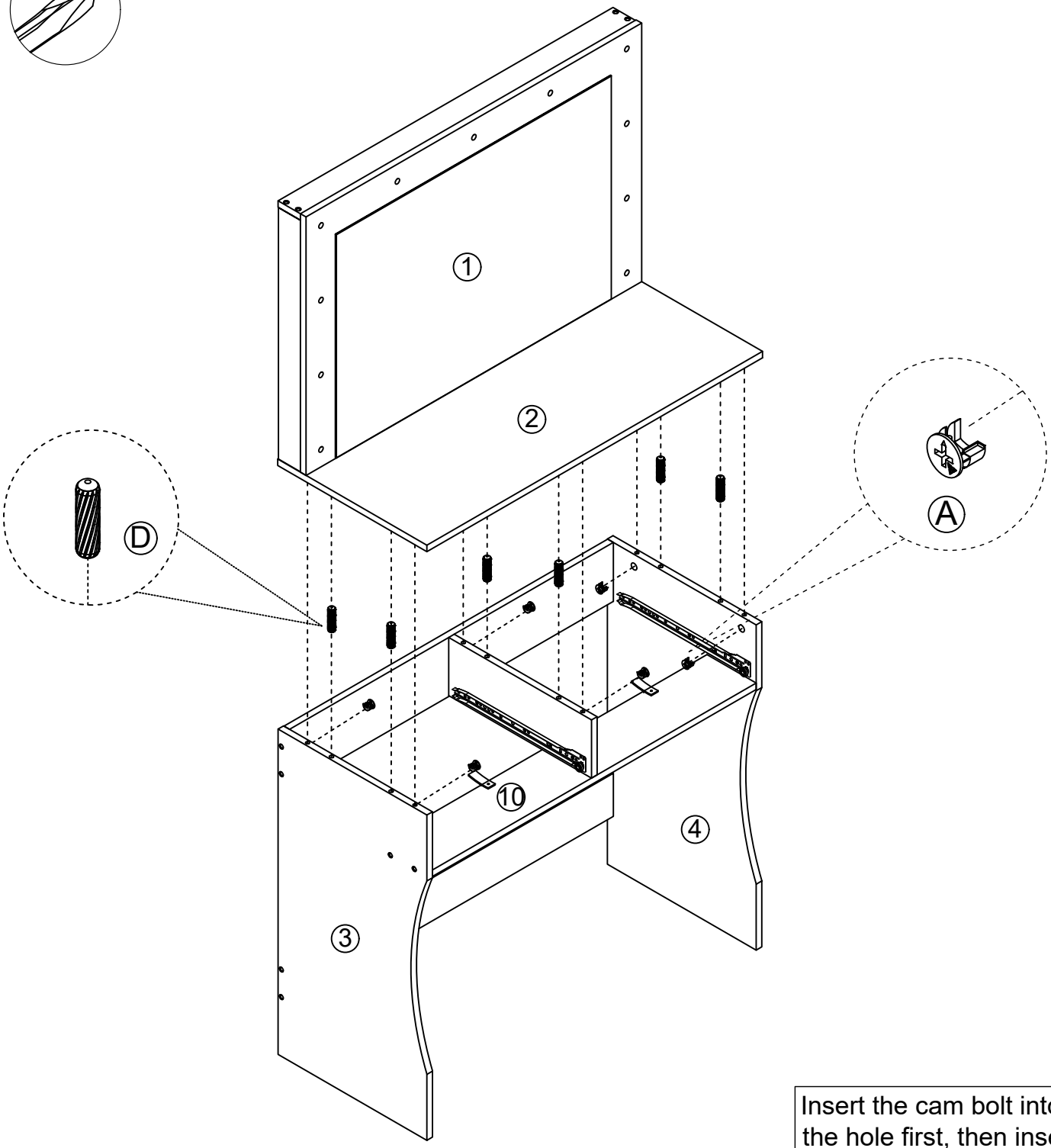

Insert the cam bolt into the hole first, then insert the cam lock and lock it.

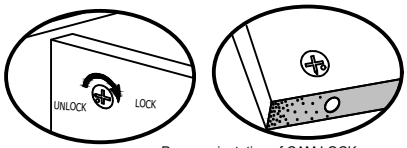

Proper orientation of CAM LOCK

STEP 9

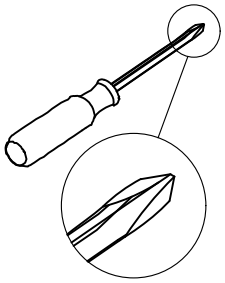

Ⓐ	X2
ϕ15X9.5mm	

Ⓚ	X1

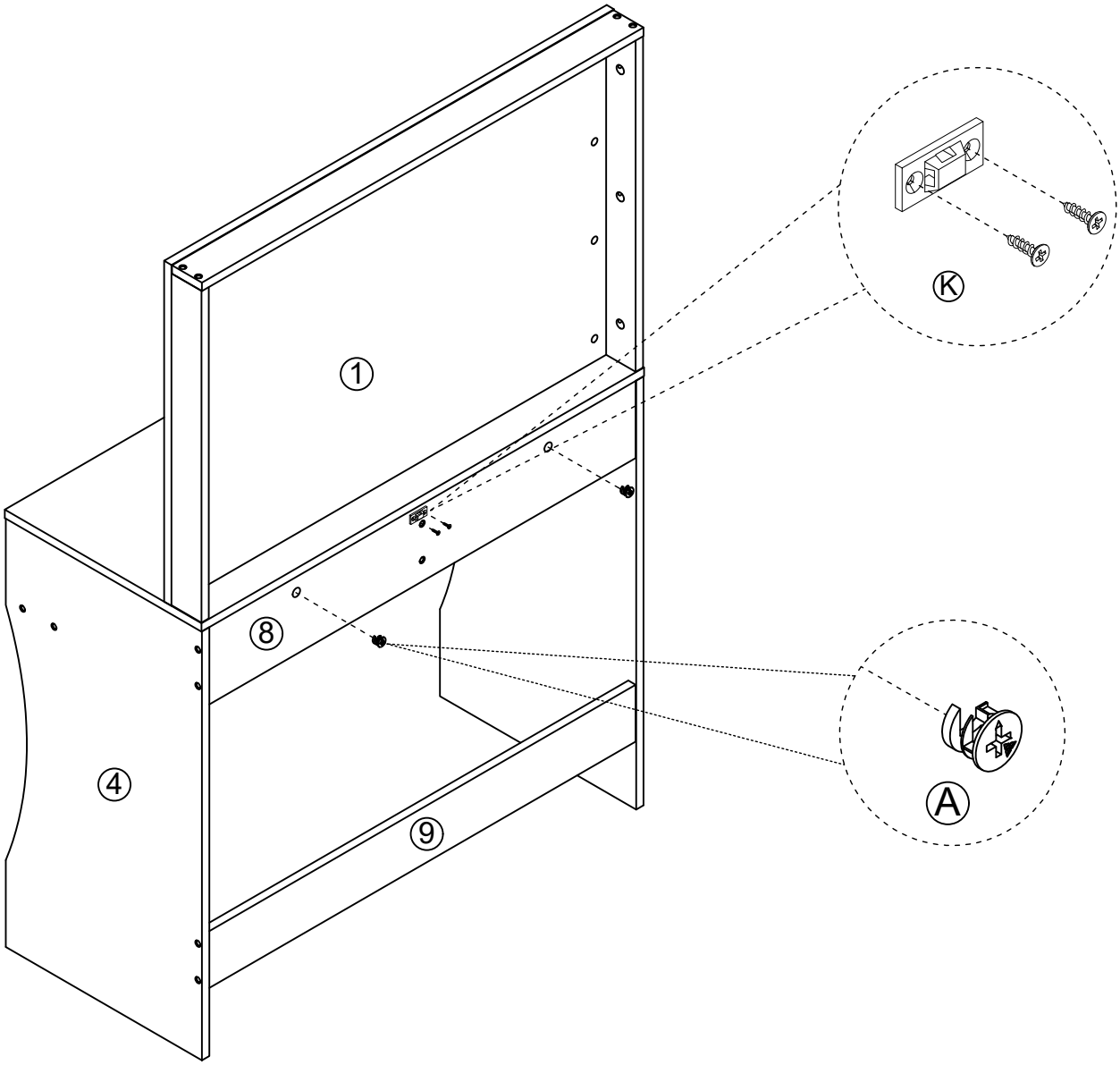

Insert the cam bolt into the hole first, then insert the cam lock and lock it.

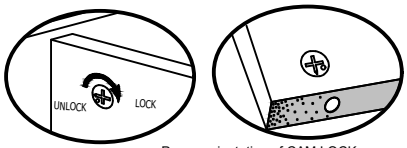

Proper orientation of CAM LOCK

STEP 10

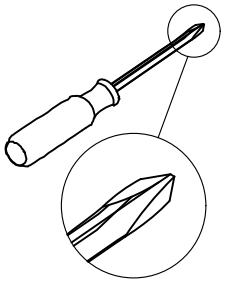

Ⓐ	X8
ϕ15X9.5mm	

Ⓑ	X8
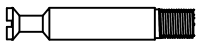	
ϕ6X35mm	

Ⓕ	X8
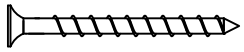	
ϕ4X35mm	

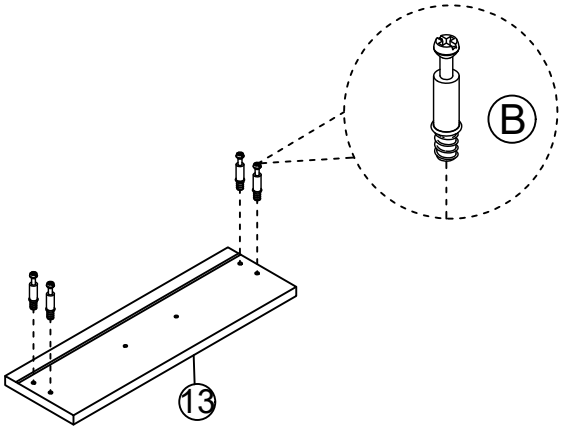

Step 1

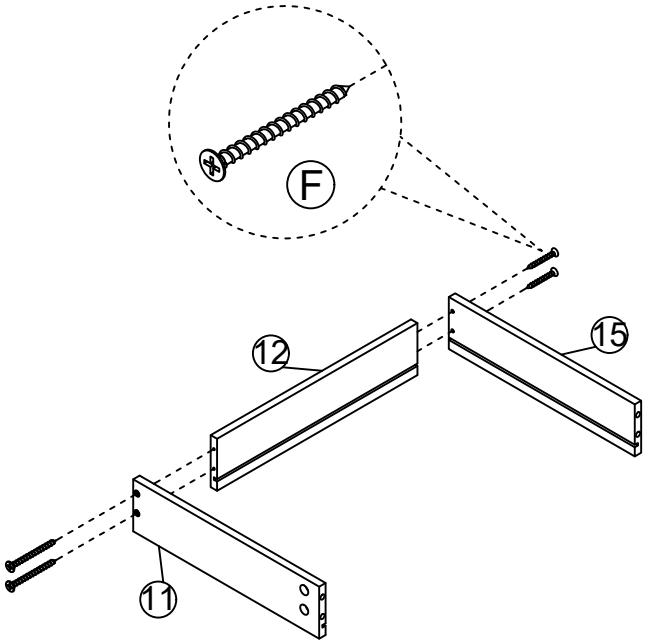

Step 2

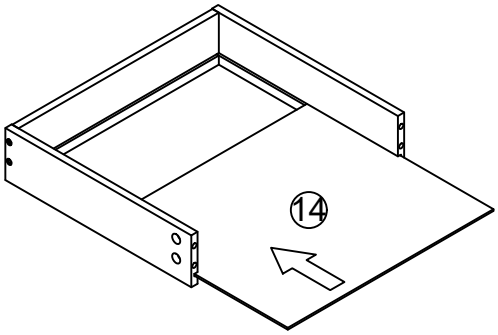

Step 3

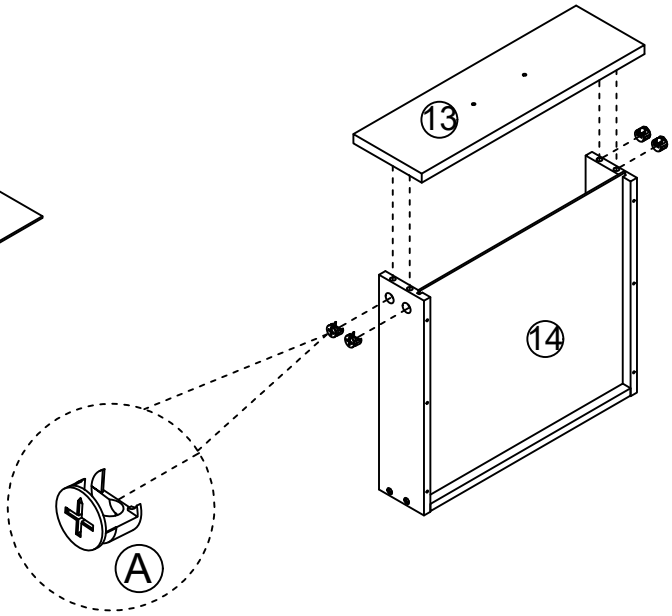

Step 4

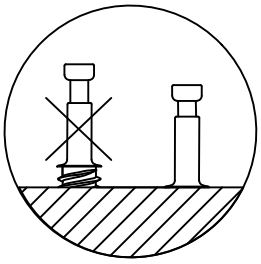

X2

STEP 11

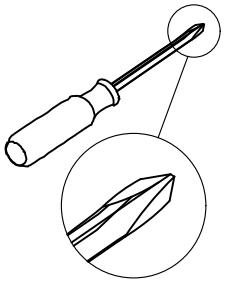

Ⓗ	X12
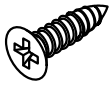	
ϕ3.5*12	

Ⓘ	X2
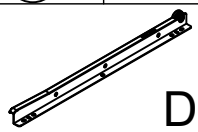 DL	
L=350	

Ⓘ	X2
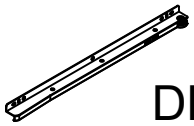 DR	
L=350	

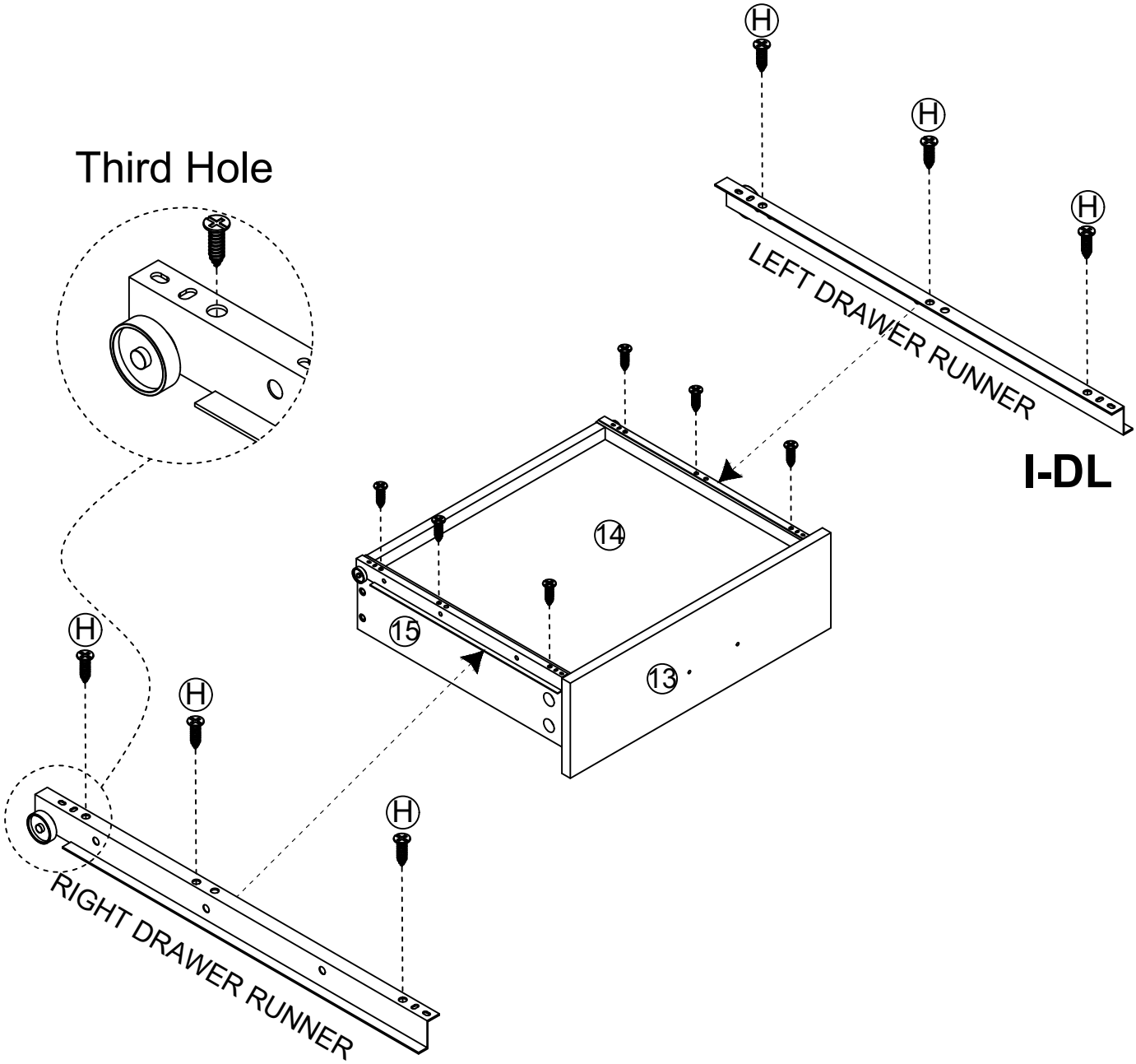

X2

STEP 12

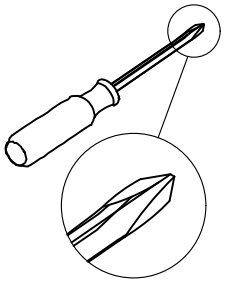

Ⓒ	X4
M4*18mm	

Ⓛ	X2
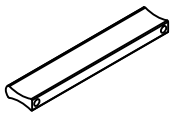	
106*8*16mm	

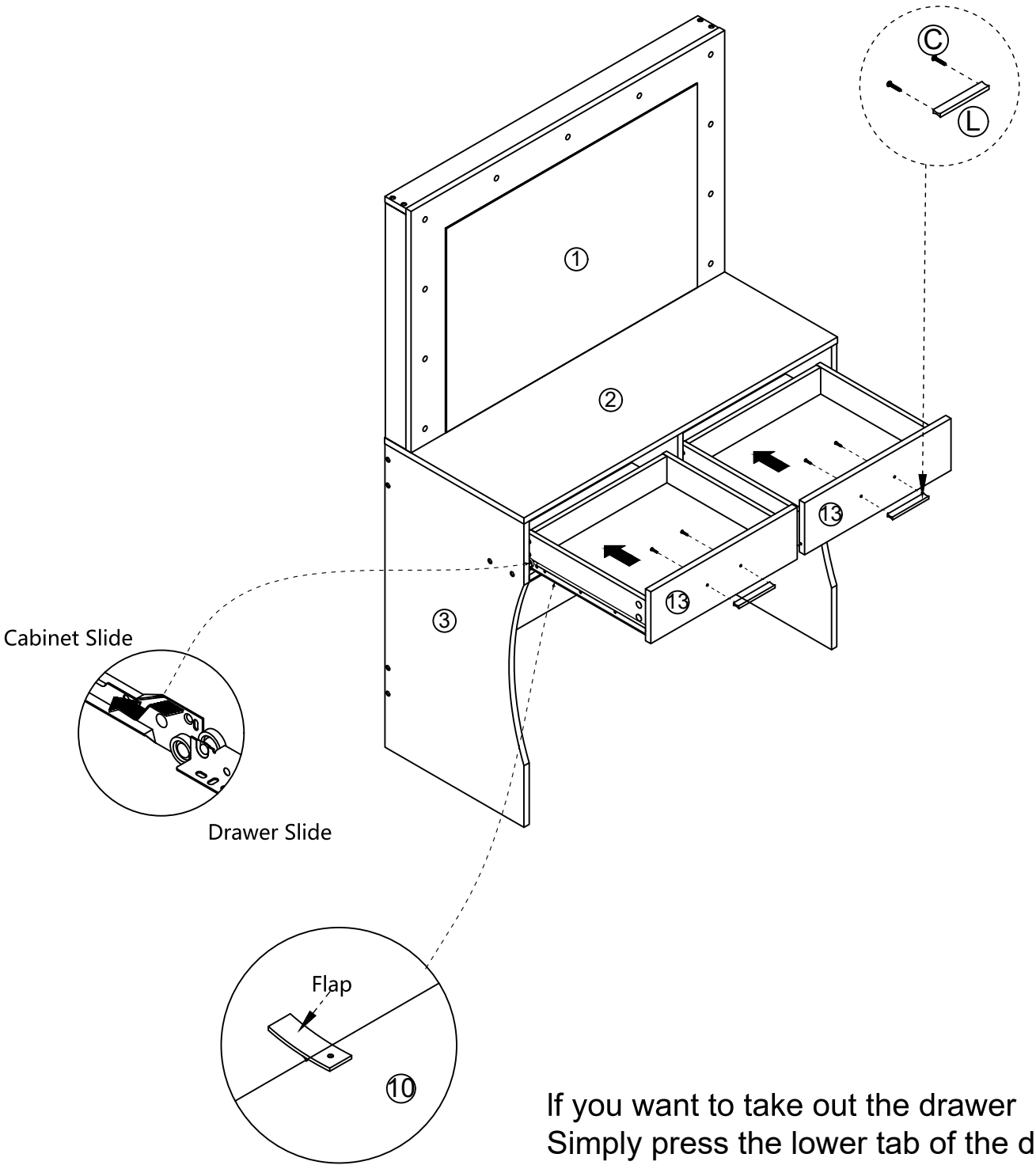

If you want to take out the drawer
Simply press the lower tab of the drawer with your hand and pull the drawer out with your other hand

STEP 13

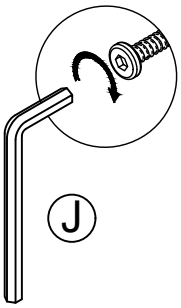

E	X12
ϕ8X30mm	

F	X12
ϕ5X40mm	

P	X1
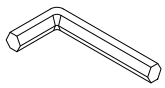	
4mm	

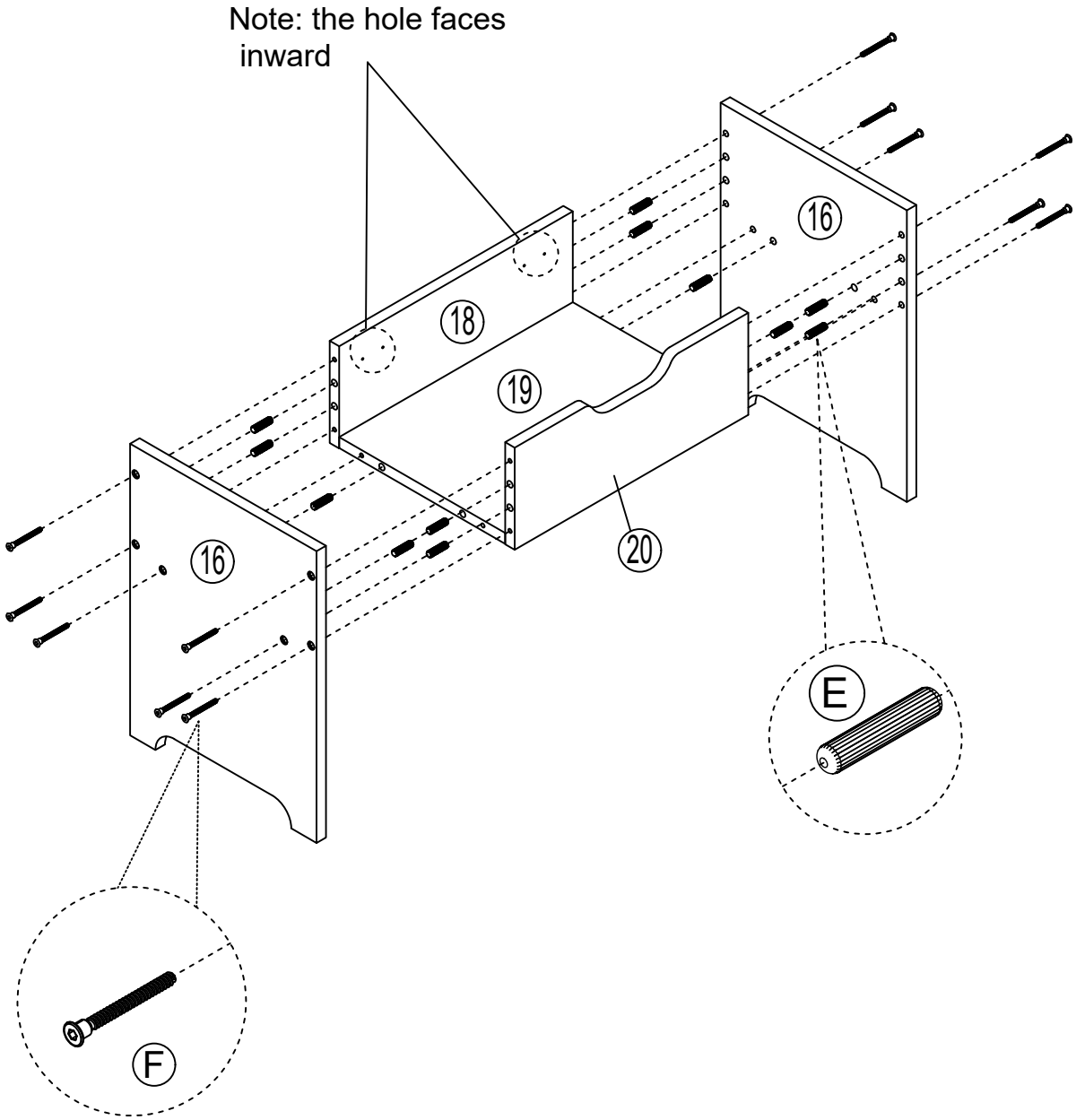

STEP 14

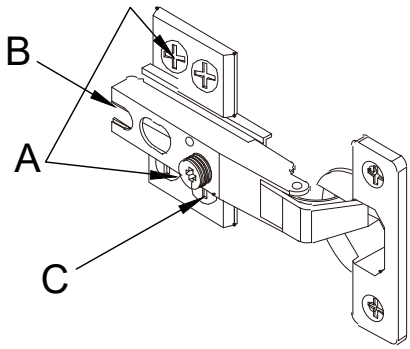

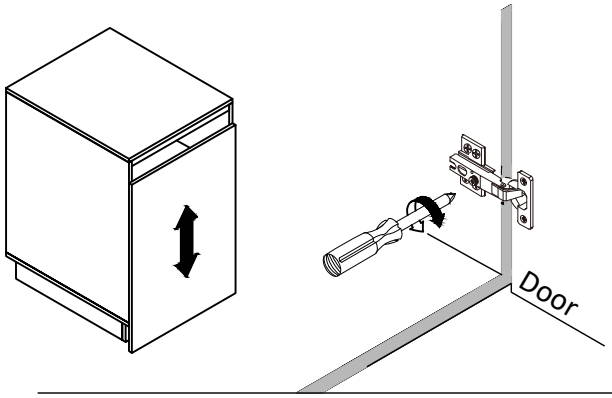

To adjust the vertical height.
Loosen the four screws "A" on both hinges.
Two of them are usually in slotted holes which allows you to adjust up or down by a few mm.
Then tighten back up.

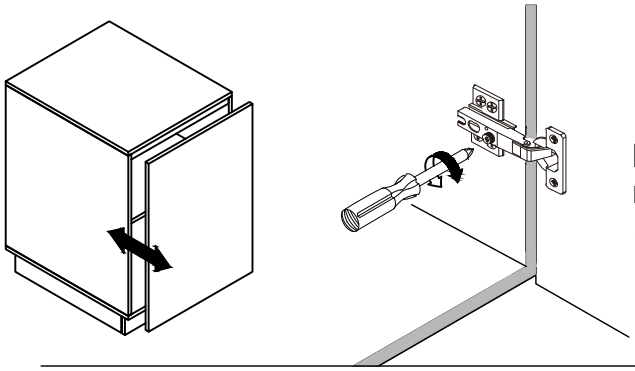

To adjust depth.
Loosen screw "B" and adjust door, if the door can not be adjusted, please loosen screw "C", then try again. Tighten screw "B" and "C".

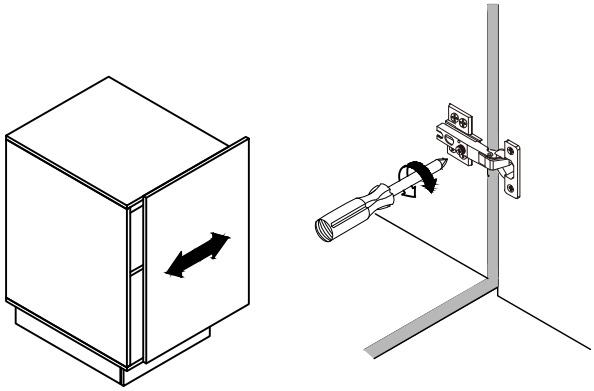

To adjust side ways.
Turning the screw "C" on BOTH hinges on each door.

STEP 15

Ⓗ	X12
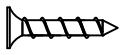	
ϕ3.5X15mm	

Ⓜ	X2
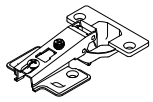	
ϕ35mm	

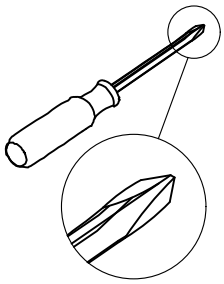

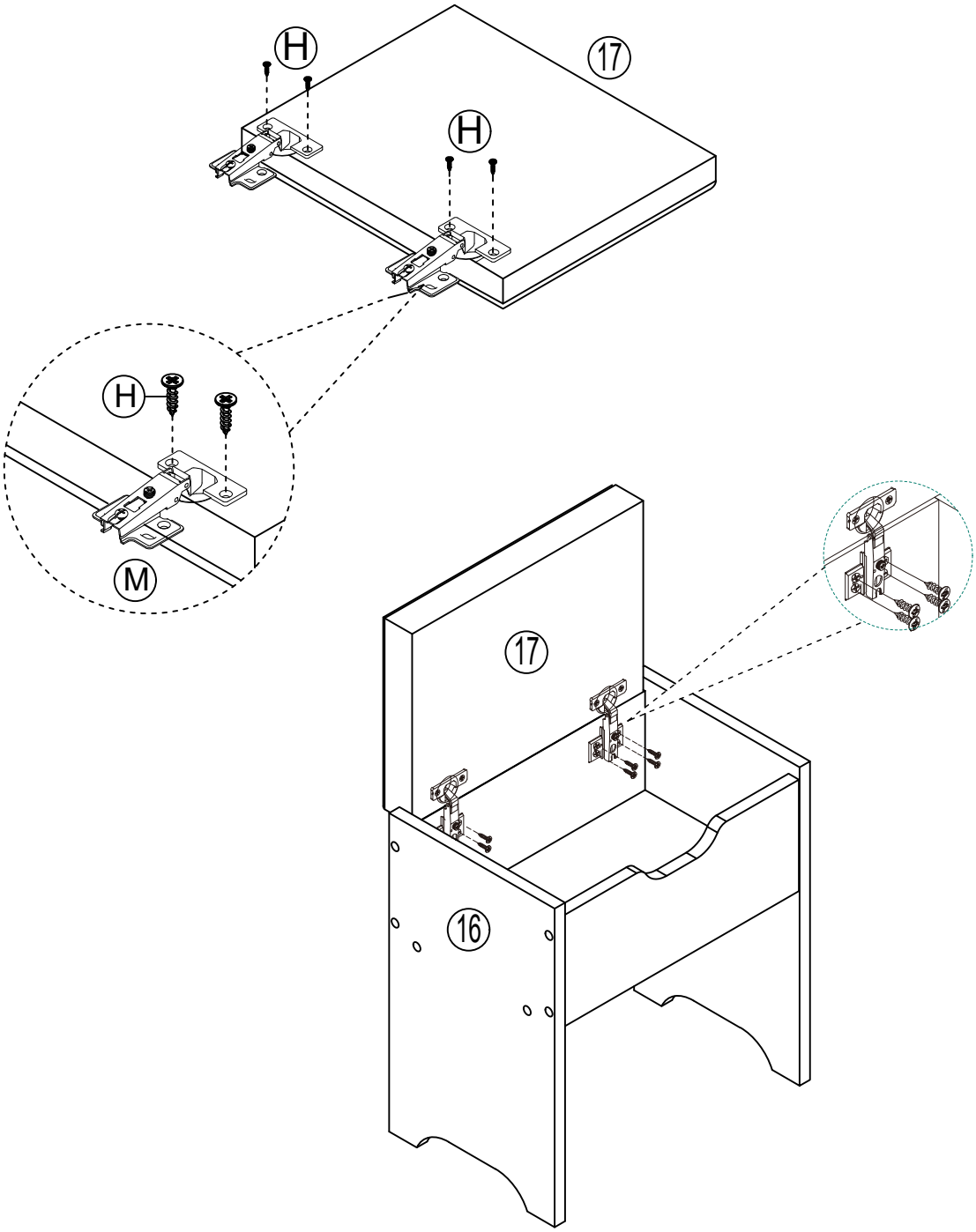

STEP 16

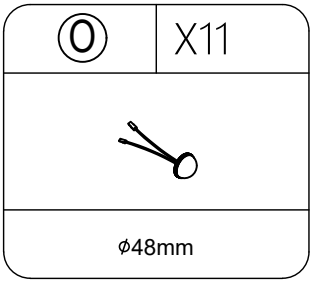

Pass the bulb wire through the pre punched plate, then gently press the
bulb and make it adhere to the plate.

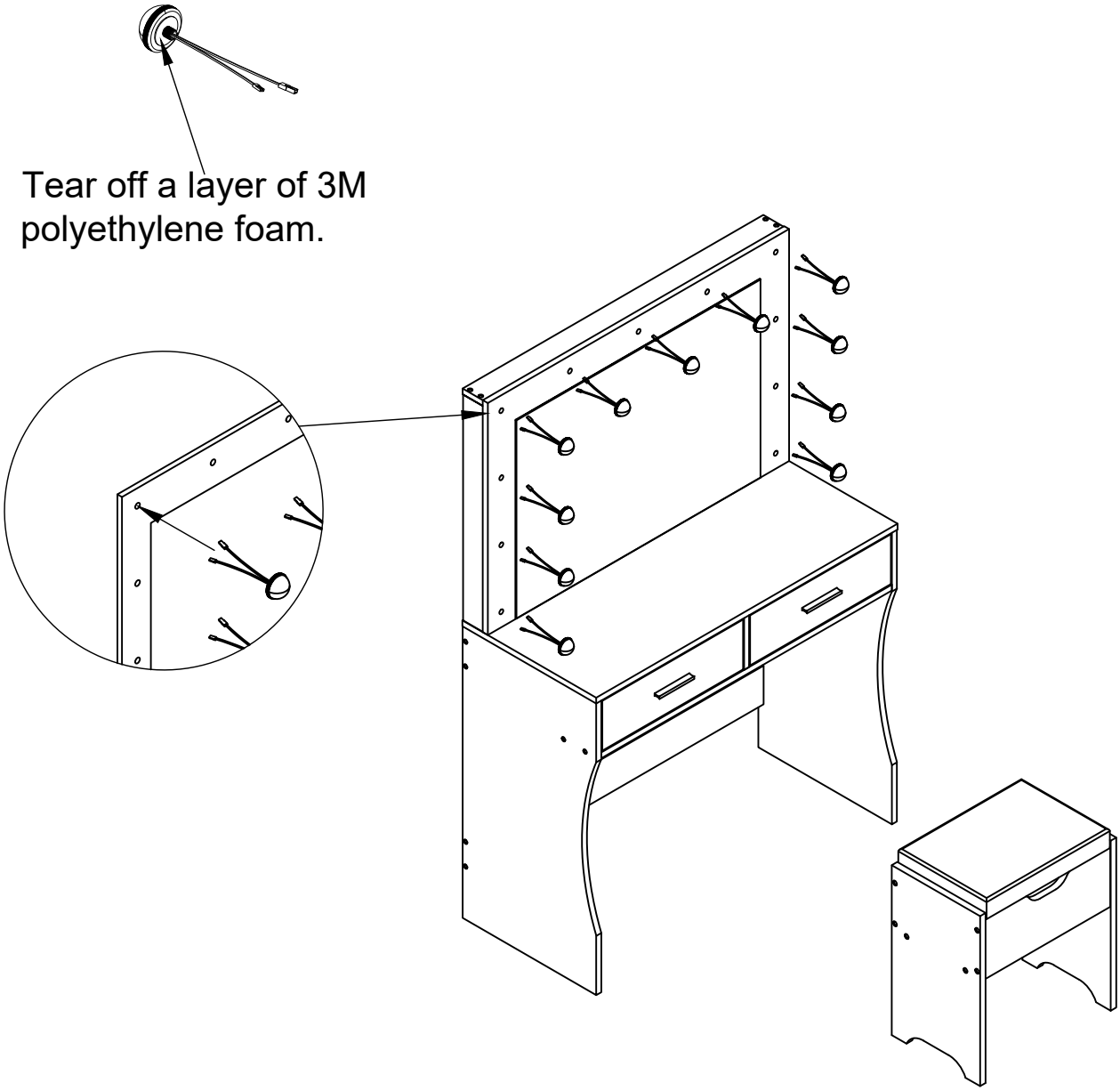

STEP 17

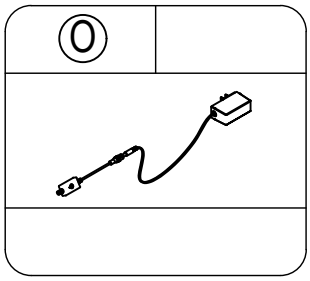

Pass the bulb wire through the pre punched plate, then gently press the bulb and make it adhere to the plate, and then connect the adjacent bulbs successively through the wire head slot on the opposite side (corresponding to the line of the same color).

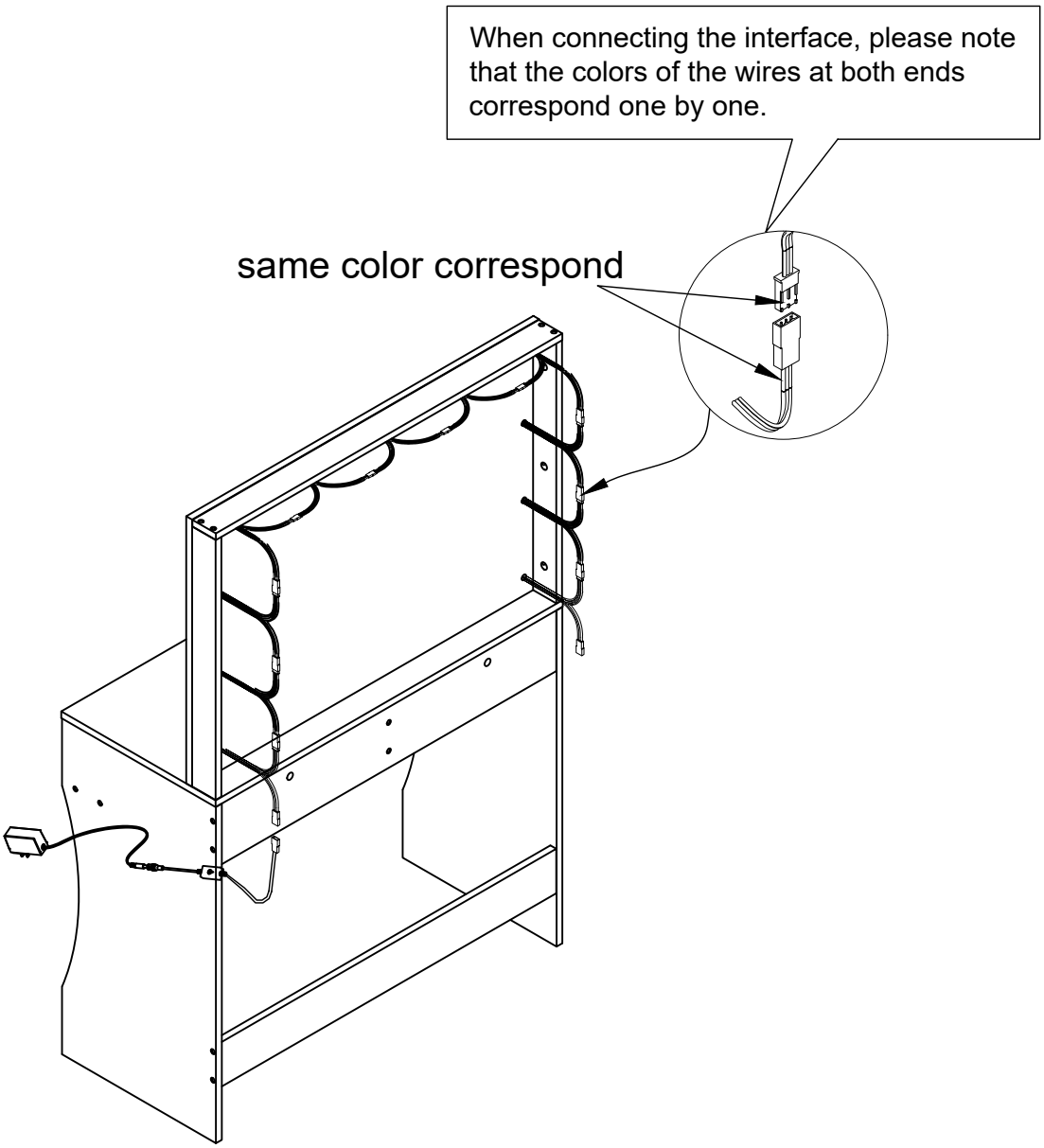

STEP 18

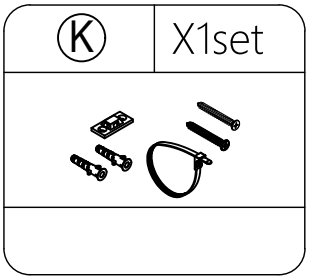

Install the tipping restraint hard ware

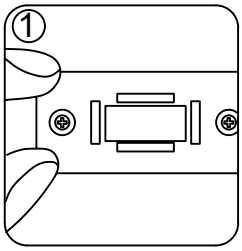

1.make mark on the wall

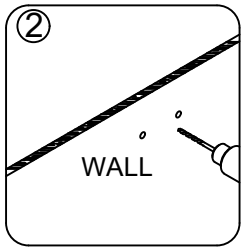

2.drill two Ø6 holes on the wall

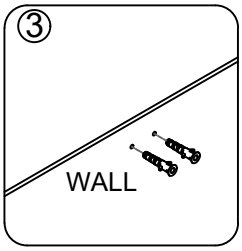

3.put two anchors in the holes

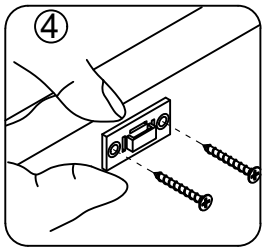

4.fix the device on the wall by the long srews

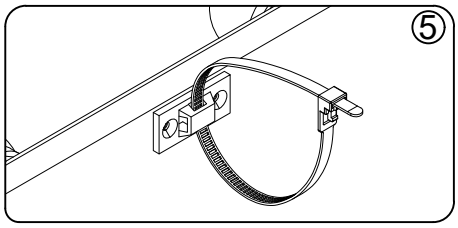
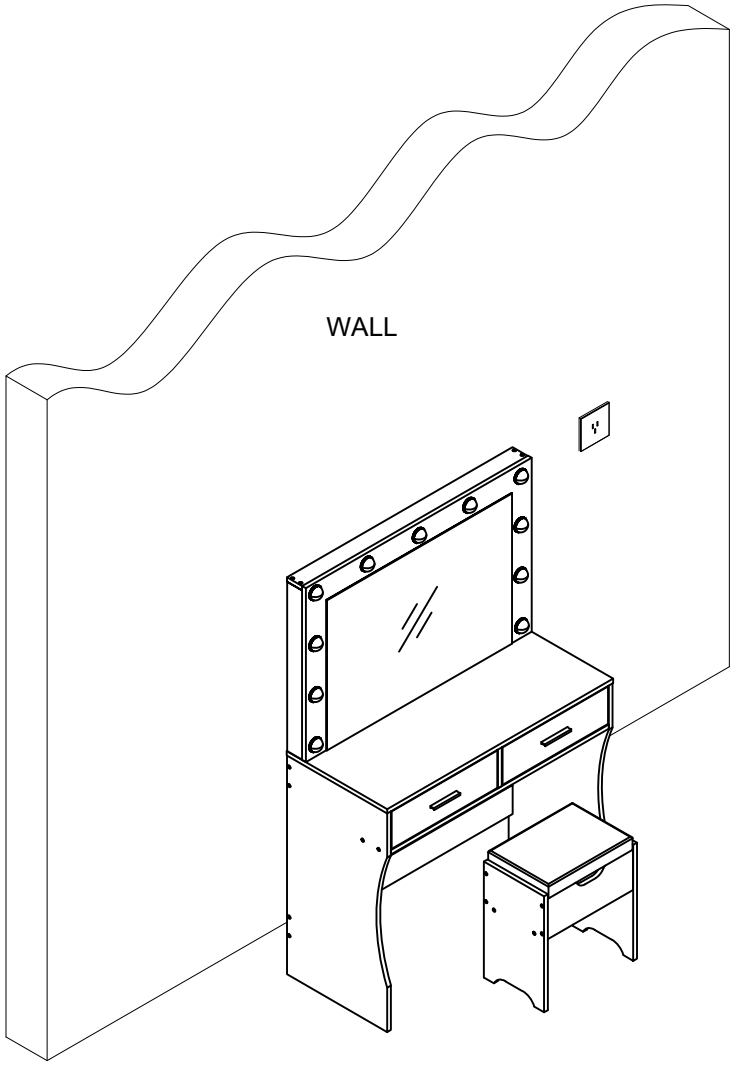
5.Push the cabinet close to the wall so that the two bases are close to each other, and then put on nylon tie to tighten it.