# Assembly Instruction

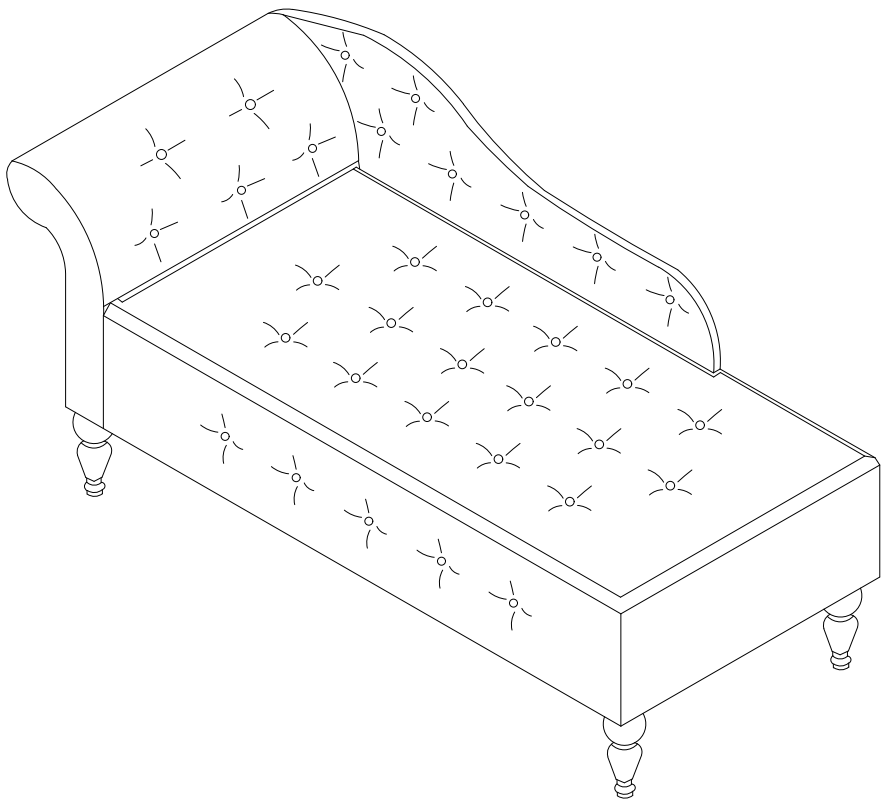

Team Assembly Recommended

## Trouble shooting:

Missing / Wrong / Broken parts and installation issues

↓

Send email with your question, pic and order NO. to
***support@idealhouse.vip***

↓

Respond within 24 hours

↓

Issue resolved

# ASSEMBLY INSTRUCTION
# CHAISE LOUNGES

## COMPONENTS ID Nr.

| Part Nr. | Qty | Part Nr. | Qty | |
|---|---|---|---|---|
| ① | 1pcs | ② | 1pcs | |
| ③ | 1pcs | ④ | 4pcs | |

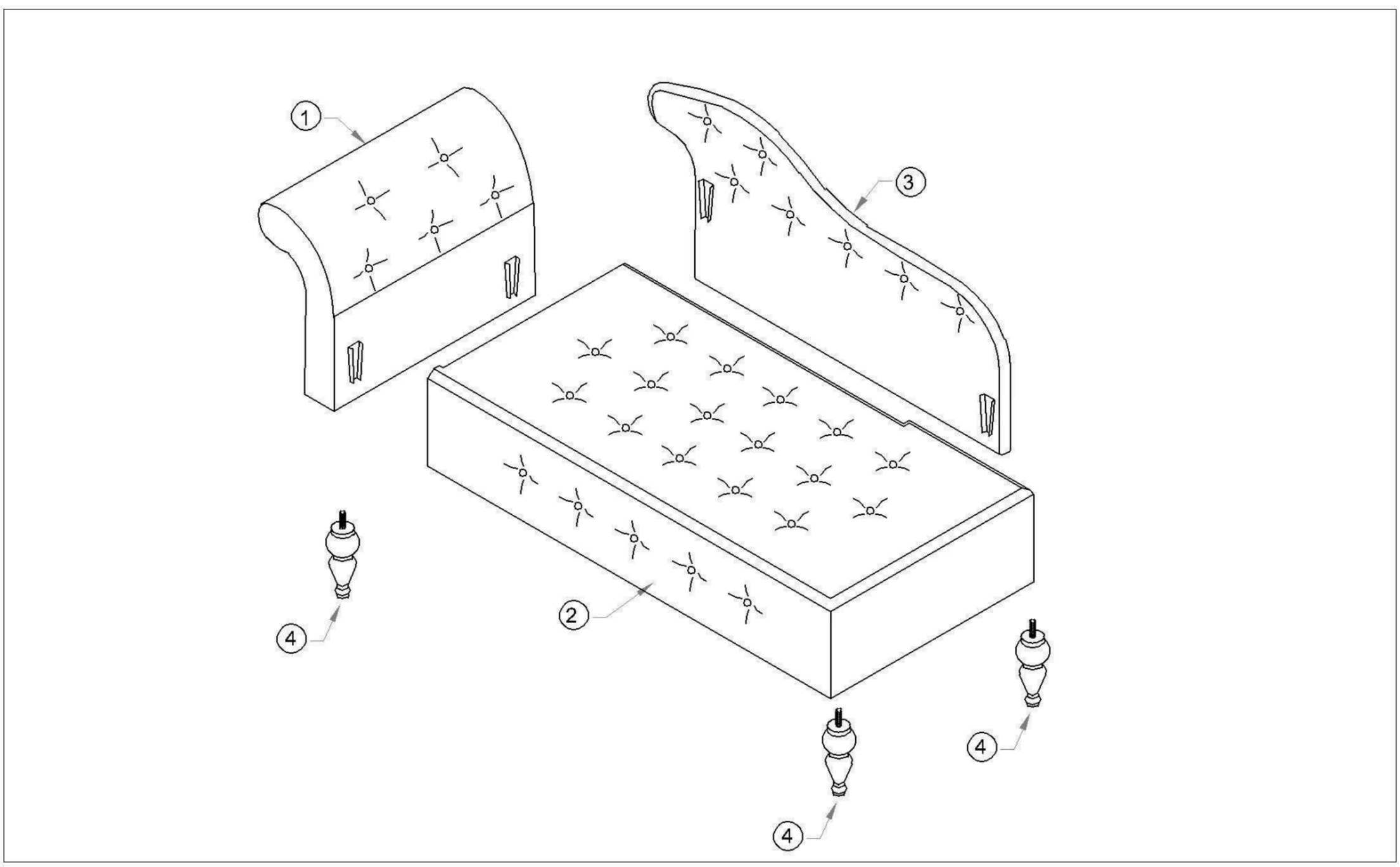


## PRODUCT ASSEMBLY

1

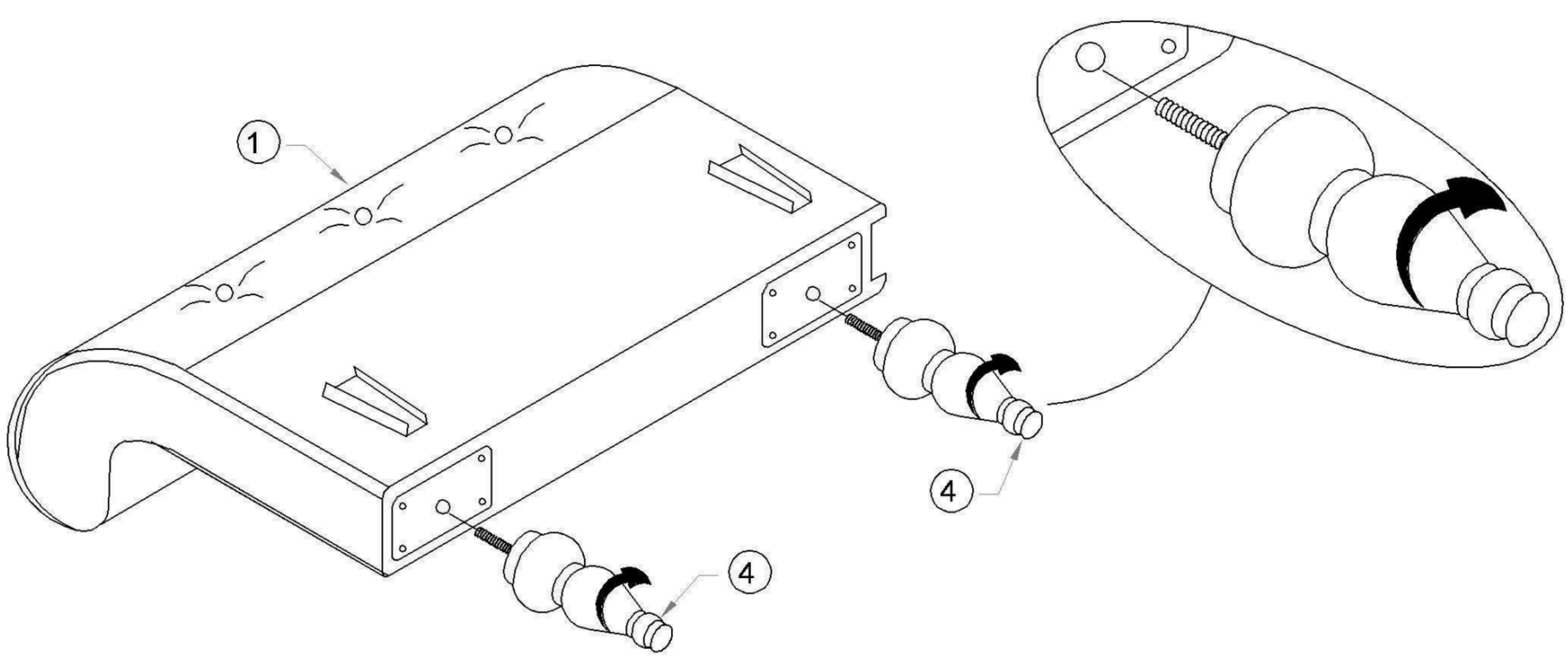

# PRODUCT ASSEMBLY

## 2

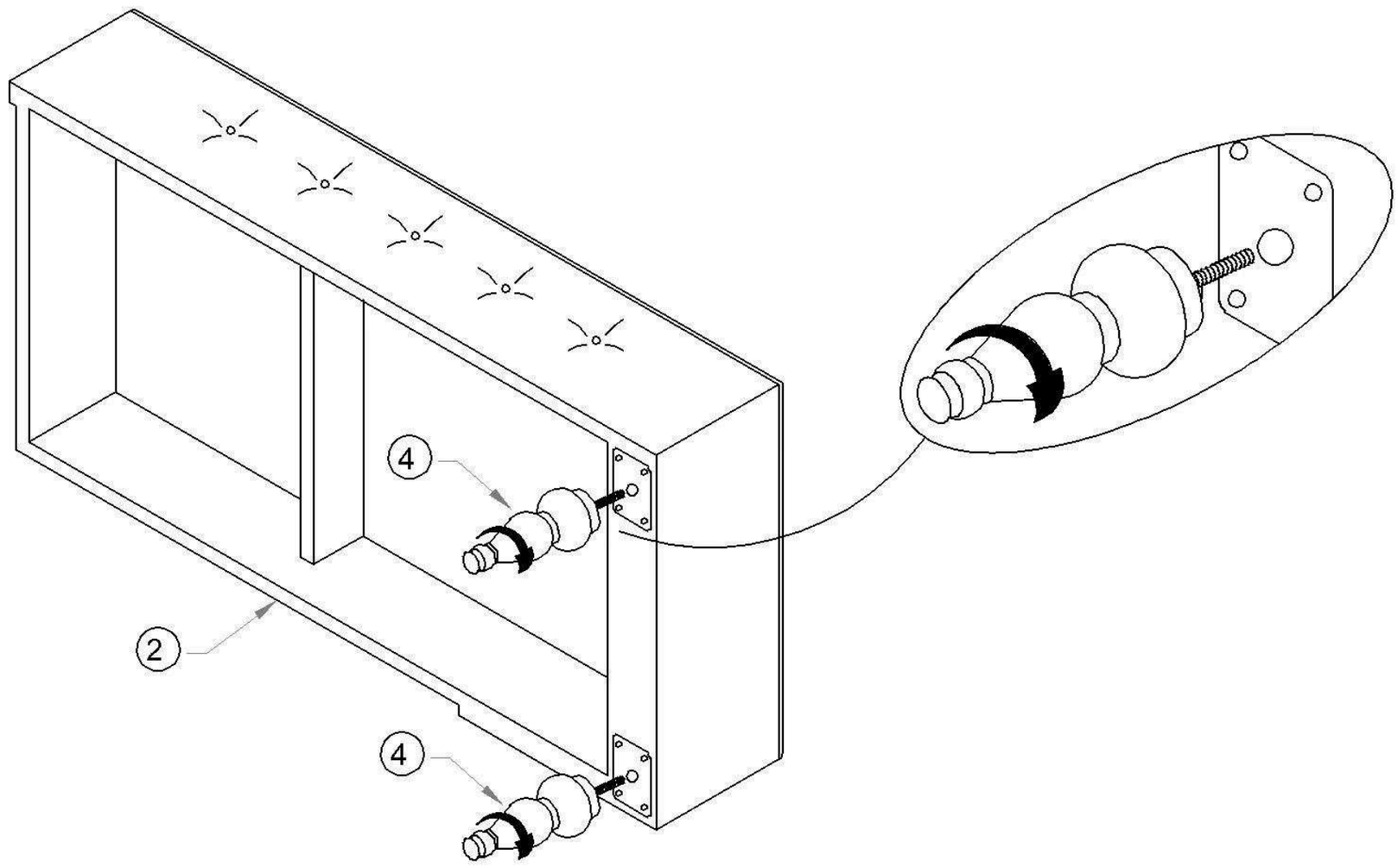


## 3

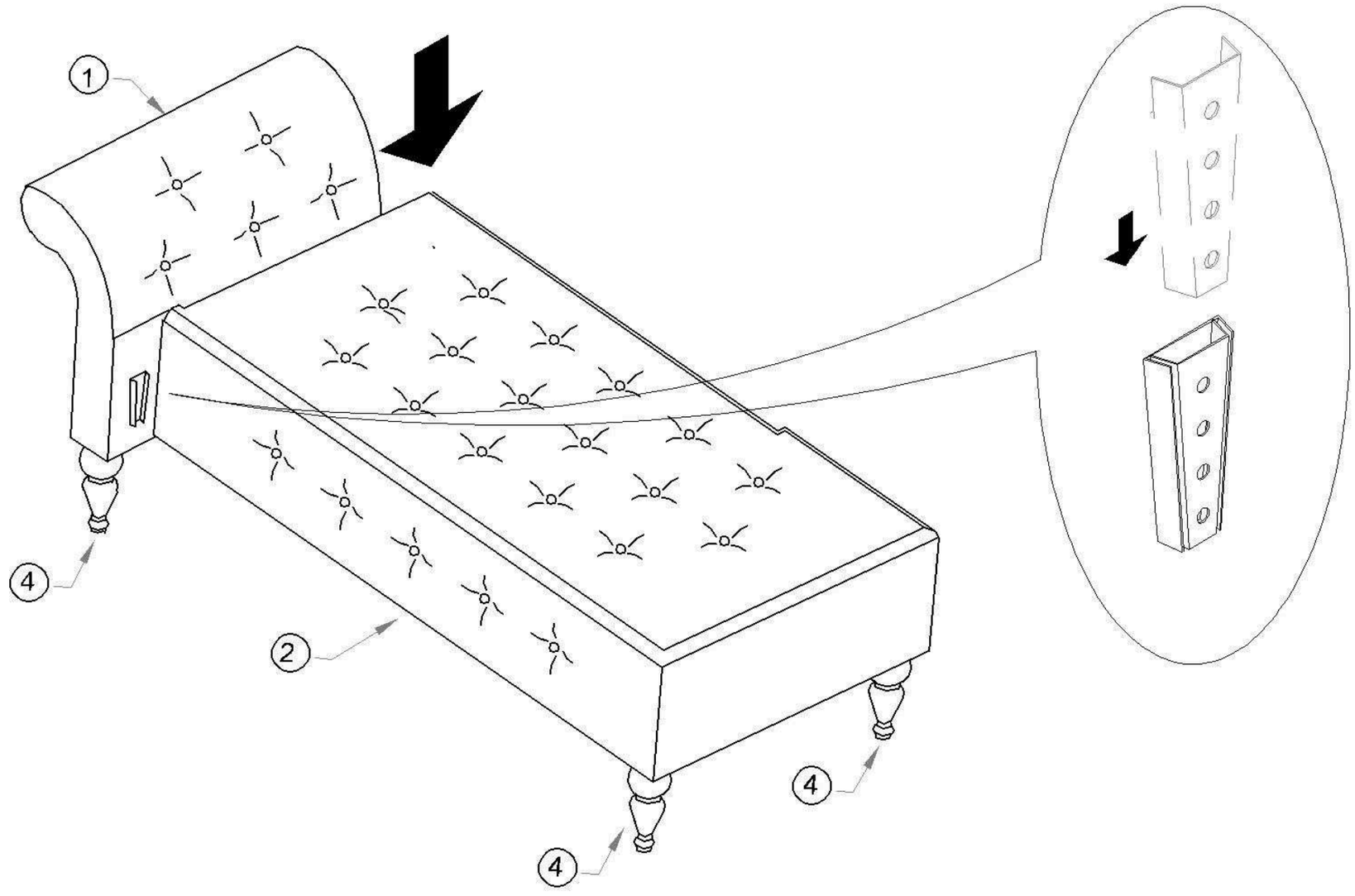


## 4

