Sofa

Assembly Instruction – Please keep properly for future reference.

If you find any missing boxes, damaged parts, or accessory shortages, please contact the customer service team of your purchasing channel immediately. We will resolve the issue as quickly as possible.

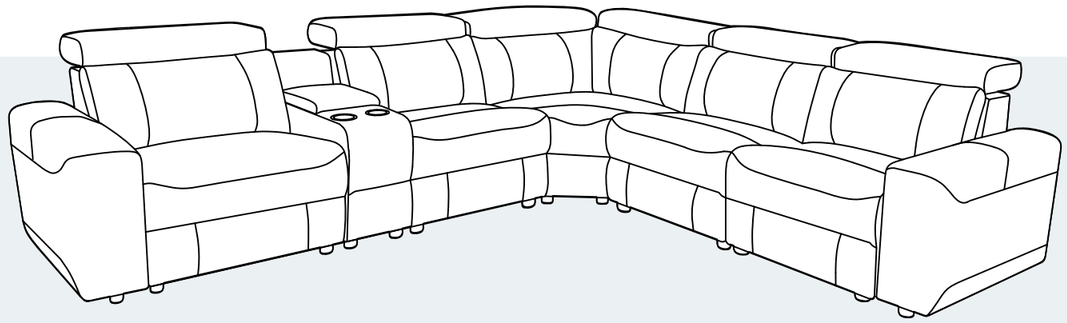

THE FOLLOWING INFORMATION:

- Order number
- Purchase platform
- Purchase date
- Detailed description of the issue along with photos (if applicable)

Important – Please read these instructions carefully before starting the installation.

Sofa

V1.0

EN

Before Assembly

Thank you for choosing our product!
To ensure a smooth installation process, please read this guide carefully to familiarize yourself with the required tools, materials, and installation steps.
Follow the relevant sections to avoid any damage caused by improper installation, and make sure to review all operation and safety guidelines for correct installation procedures.

Packaging Notice:

1. Multi-Box Shipping Notice

This product is packaged in 5 separate boxes for shipping and may arrive in batches at different times. To ensure a smooth assembly process, please make sure all boxes are received before unpacking and starting the installation.

2. Box and Packaging Verification

Each box is labeled with a corresponding number. Please refer to the packing list on the next page of this manual to verify that all boxes have been received.

If you find any missing boxes, damaged parts, or accessory shortages, please contact the customer service team of your purchasing channel immediately. We will resolve the issue as quickly as possible.

Installation Information

- All information in this guide is based on the product's condition at the time of printing. We reserve the right to modify product features, packaging, or availability without prior notice.
- Before installing the furniture, ensure that all necessary electrical or environmental preparations are completed.
- This manual contains important instructions on installation, cleaning, and maintenance. Please read it thoroughly and keep it for future reference.

Pre-Installation Checklist

1. Carefully inspect the new product for any damage or defects.
2. Ensure installation is carried out on a clean, flat surface to maintain balance and stability.

3. Avoid prolonged exposure of the product to damp environments or direct sunlight.
4. Handle with care during installation. Use protective materials (e.g., soft pads) to prevent scratches.
5. For any questions or technical support, refer to the customer service guide and contact the seller's customer service.

Usage and Maintenance Recommendations

1. Clean furniture regularly to maintain hygiene and prevent bacteria growth. Use a damp cloth that has been wrung out to avoid scratching the finish.
2. Avoid contact with acidic or alkaline corrosive liquids.
3. Do not use unauthorized replacement parts. For replacement parts, contact the manufacturer or distributor.
4. Do not machine wash or rinse any part of this product with water.

Safety Warnings

1. Warning Labels:

Do not remove warning labels on the product or packaging, and always follow the related instructions.

2. Regular Inspections:

Regularly check all parts of the product to ensure they are correctly installed, undamaged, and all connectors are securely tightened.

3. Safe Use:

Do not play on or under the sofa, and strictly avoid jumping or any actions that may harm the sofa or users.

4. Rope Hazard:

Do not attach ropes, hooks, straps, or other unintended items to any part of the product.

5. Guide Preservation:

Retain this manual for future reference.

6. Supervisory Responsibility:
Safety is a shared responsibility between the manufacturer and the user.
Always adhere to safety guidelines when using the product.

Disclaimer

We are committed to providing safe and reliable products. If you have any questions about this product or require additional support, please contact our customer service team. We are here to assist you.

Safety Instructions / Warnings

Please read and follow all instructions carefully before installation and use.

WARNING:
Risk of electric shock – Do not open or disassemble electrical parts.

- **Use only the power cord specifically provided for this product.**
  Adaptor Input: 100-240V~, 50/60Hz, 1.5A. Output: DC 29V 2.0A, 58W.
  USB Output: DC 5V 2A.
- Do not use with damaged power cords or plugs.
- Keep power cables away from moving or sharp parts of the furniture.
- Do not use extension cords or power strips unless specifically approved for the load.
- This product is **not a toy**. Do not allow children to play with electrical components or moving parts.
- Children under 8 years old must be kept away from the furniture unless continuously supervised.
- Keep remote controls, control switches, and ports out of children's reach.
- Always **disconnect the product from power** before cleaning, maintenance, or relocation.
- Do not attempt to open, modify, or repair electrical components.
- **Repairs must be performed by qualified professionals only.**
- Do not insert any foreign objects into openings or mechanisms.
- Clean with a dry cloth or a slightly damp soft cloth. Do not use solvents.
- This product is intended **for indoor** use only in dry environments.
- Do not expose the furniture to moisture, liquids, or direct sunlight.
- * Ensure stability and clearance around any moving parts (e.g., lift mechanisms, recliners).
- Do not overload power outlets or USB ports beyond the specified ratings.
- **Always unplug the product when it is not in use.**

FCC Information:

EN

CAUTION: Changes or modifications not expressly approved by the party responsible for compliance could void the user's authority to operate the equipment!

This device complies with Part 15 of the FCC Rules. Operation is subject to the following two conditions:

1) This product may cause harmful interference.

2)This product must accept any interference received, including interference that may cause undesired operation.

WARNING: Changes or modifications to this product not expressly approved by the party. responsible for compliance could void the user's authority to operate the product.

Note: This product has been tested and found to comply with the limits for a Class B digital device pursuant to Part 15 of the FCC Rules, These limits are designed to provide reasonable protection against harmful interference in a residential installation.

This product generates, uses and can radiate radio frequency energy, and if not installed and used in accordance with the instructions, may cause harmful interference to radio communications. However, there is no guarantee that interference will not occur in a particular installation. If this product does cause harmful interference to radio or television reception, which can be determined by turning the product off and on, the user is encouraged to try to correct the interference by one or more of the following measures.

- Reorient or relocate the receiving antenna.
- Increase the distance between the product and receiver.
- Connect the product to an outlet on a circuit different from that to which the receiver is connected.
- Consult the dealer or an experienced radio/TV technician for assistance.

Customer Service Guide

Thank you for choosing our product! We are committed to providing you with excellent service. If you find any missing parts, damaged packaging, or product damage after receiving all packages, please follow the steps below to quickly contact our customer service team. We will do our best to resolve your issue.

1. Missing Parts

Verify Parts:

1. Refer to the “Parts List” in the manual to verify the name, specifications, and quantity of the missing parts.
2. Take a clear photo of the parts list and mark the missing parts with detailed information, e.g., “Missing 5 pieces of M6×30mm screws.”

Contact Us:

By Email:

Send an email with the subject line “Missing Parts Issue.” Include the following in the email:

- A description of the missing parts and a photo of the parts list.
- Order details (order number, purchase platform, purchase date).

2. Product or Packaging Damage

If it affects normal use:

Steps:

1. Take clear photos or videos showing the damaged parts and the extent of the damage (multi-angle shots are recommended).
2. Email the photos/videos along with the subject line “Product Damage Issue.”

Resolution:

After verification, we will arrange for a replacement part, product exchange, or refund as quickly as possible.

If it does not affect normal use:

Steps:

1. Contact our customer service team.
2. Provide a description of the damage and include relevant photos or videos.

Resolution:

We will provide repair guidance or an appropriate compensation plan based on the specific situation.

Helpful Tips

To process your issue efficiently, please prepare the following information:

- Order details (order number, purchase platform, purchase date).
- Clear photos or videos.
- We are committed to providing quick and professional solutions, no matter the size of the issue, to ensure your satisfaction.

Thank you for your trust and support!
We hope you enjoy using our product!

Parts List

Box 1

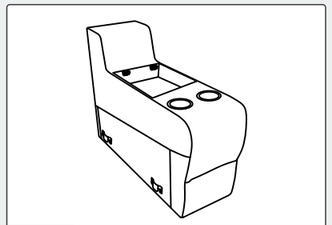
B1 x1

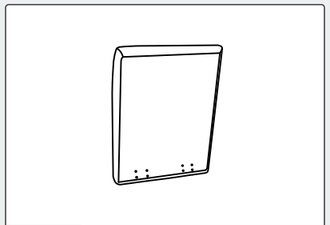
B2 x1

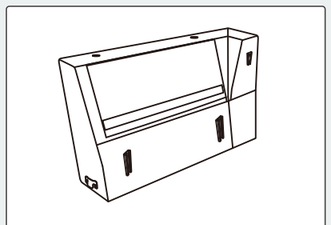
D2 x1

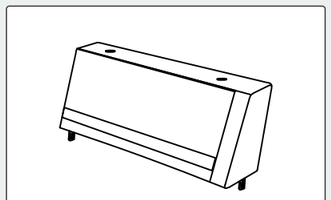
D3 x1

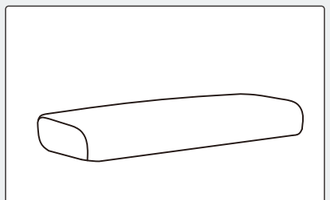
D6 x1

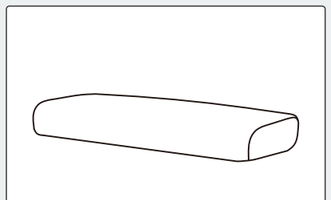
D7 x1

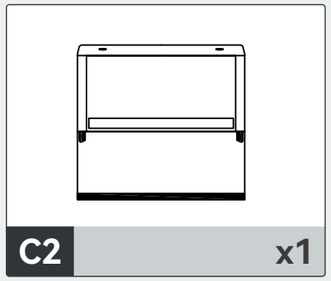
C2 x1

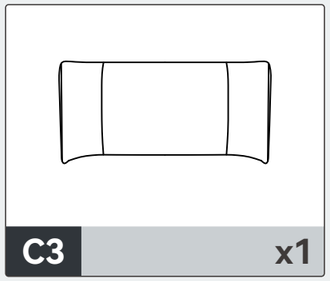
C3 x1

Hardware List (in Box 1)

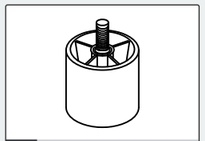
1 x31

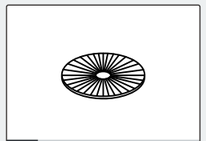
2 x31


3 x6

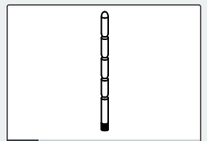
4 x4

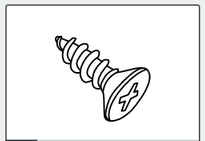
5 x8

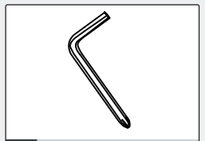
6 x4

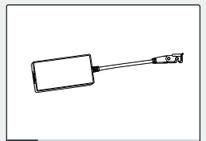
7 x2

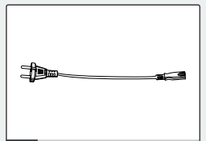
8 x2

Box 2

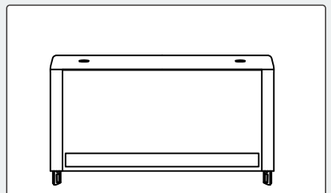
A3 x1

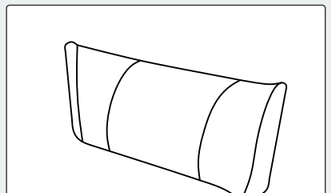
D5 x1

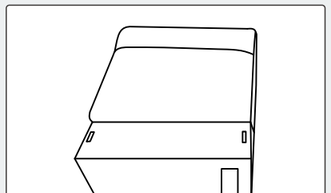
C1 x1

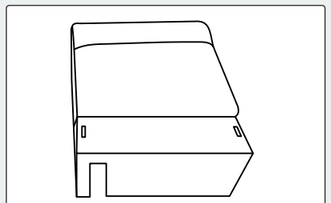
E1 x1

Box 3

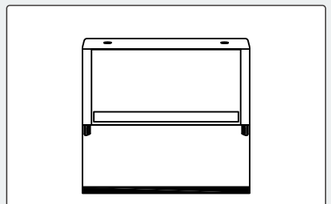
E2 x1

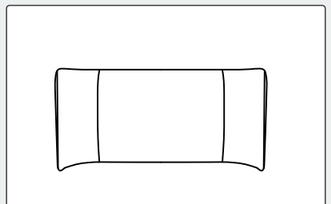
E3 x1

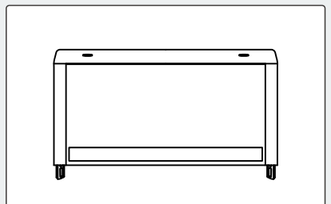
F3 x1

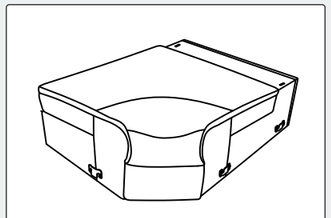
D1 x1

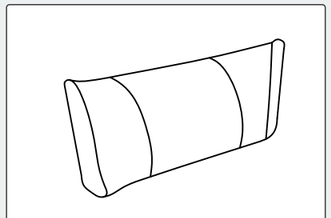
D4 x1

Box 4

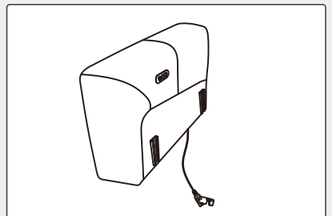

A1 x1

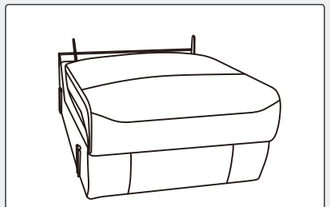

A2 x1

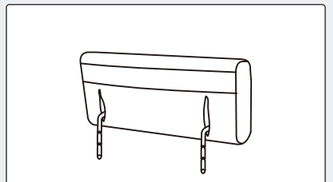

A5 x1

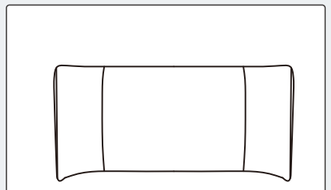

A4 x1

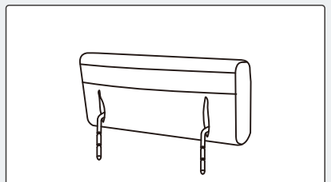

C4 x1

Box 5

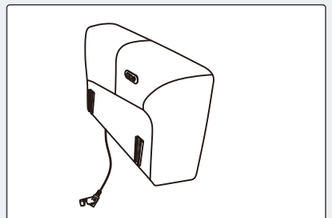

F1 x1

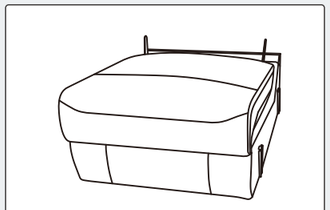

F2 x1

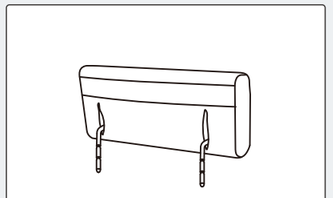

F5 x1

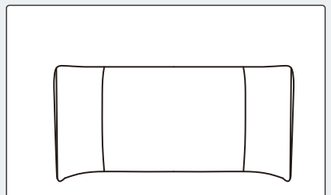

F4 x1

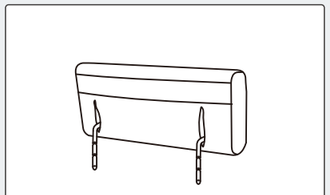

E4 x1

Assembly Instructions

Important : Please read these instructions fully before starting assembly.

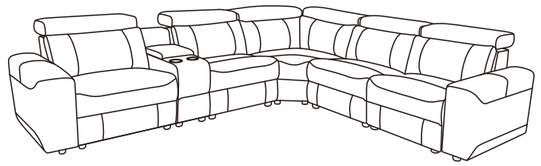

Note :

Delivered with 5 PACKAGES with 5 TRACKINGS, may NOT be deliverded at the same time.

Before starting assembly, determine where the sofa will be placed and the orientation you want it to be.



2 people needed



Work gloves



Tape measure

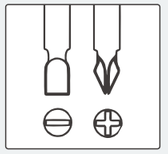

Other Tools Required
Phillips Screwdriver
(Not Included)

Simple Assembly Steps

1. Read the manual carefully.
2. Check all parts and hardware.
3. Prepare necessary tools.
4. Have at least two adults for assembly.

Please follow the instructions and use a sanitary napkin to protect the product during your assembly process.

Note:
1. The assembly should be done on a flat surface to maintain balance.
2. Do not tighten the screws before the assembly is complete.
To make the assembly process easier and better, two or more adults are needed.

Exploded View

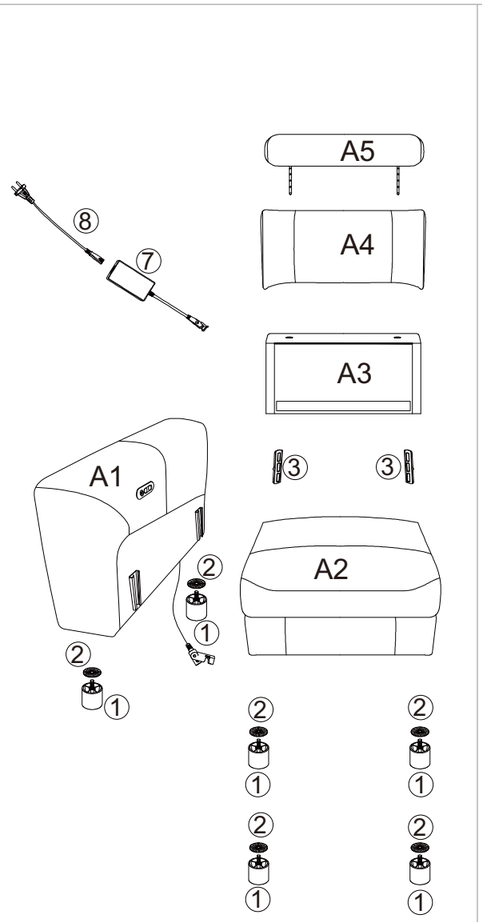

Left armrest seat

A1 X1, A2 X1, A3 X1,
A4 X1, A5 X1,
① X6, ② X6, ③ X2, ⑦ X1, ⑧ X1

Console unit

B1 X1, B2 X1,
①X4, ②X4,
⑤X4, ⑥X1

Left middle seat

C1 X1, C2 X1,
C3 X1, C4 X1,
①X4, ②X4, ③X2

Corner seat

D1 X1, D2 X1, D3 X1,
D4 X1, D5 X1, D6 X1, D7 X1,
① X7, ② X7, ③ X2, ④ X4

Right middle seat

E1 X1, E2 X1,
E3 X1, E4 X1,
①X4, ②X4, ③X2

Right armrest seat

F1 X1, F2 X1,
F3 X1, F4 X1, F5 X1
①X6, ②X6, ③X2, ⑦X1, ⑧X1

EN

Step 1

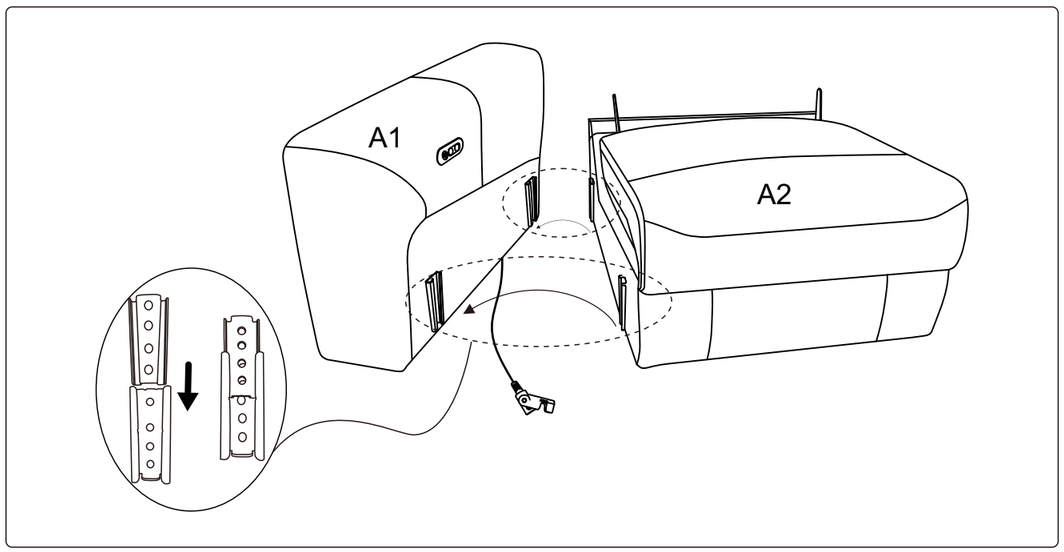

Align the metal connectors, slide Part A2 horizontally into Part A1 until fully seated.

Note:
Make sure to keep the power cord out of the way during installation.

Step 2

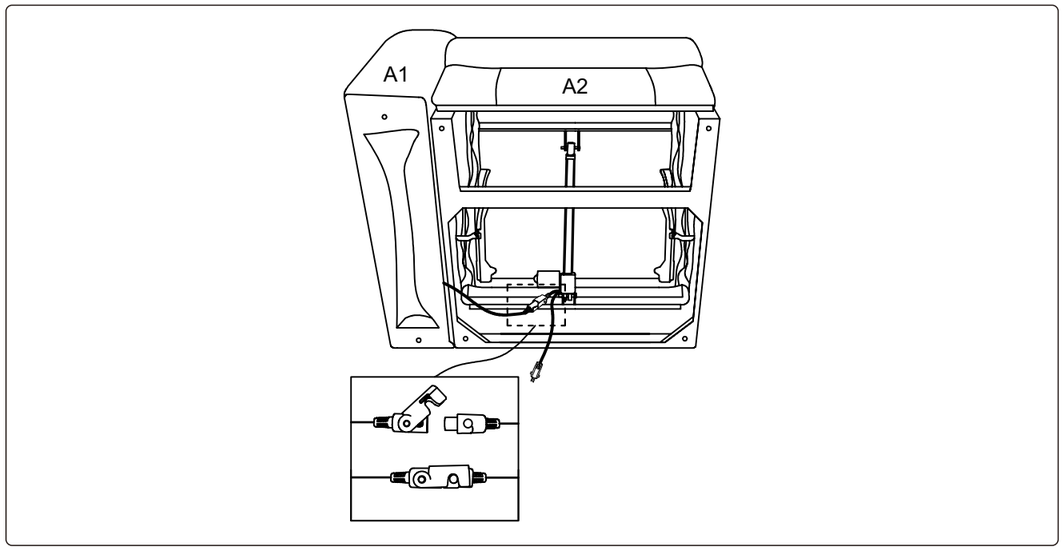

Turn the unit over and connect the power cables of Part A2 and Part A1.

Note:
Ensure the plug and socket are properly aligned before connecting to avoid damage.

Step 3

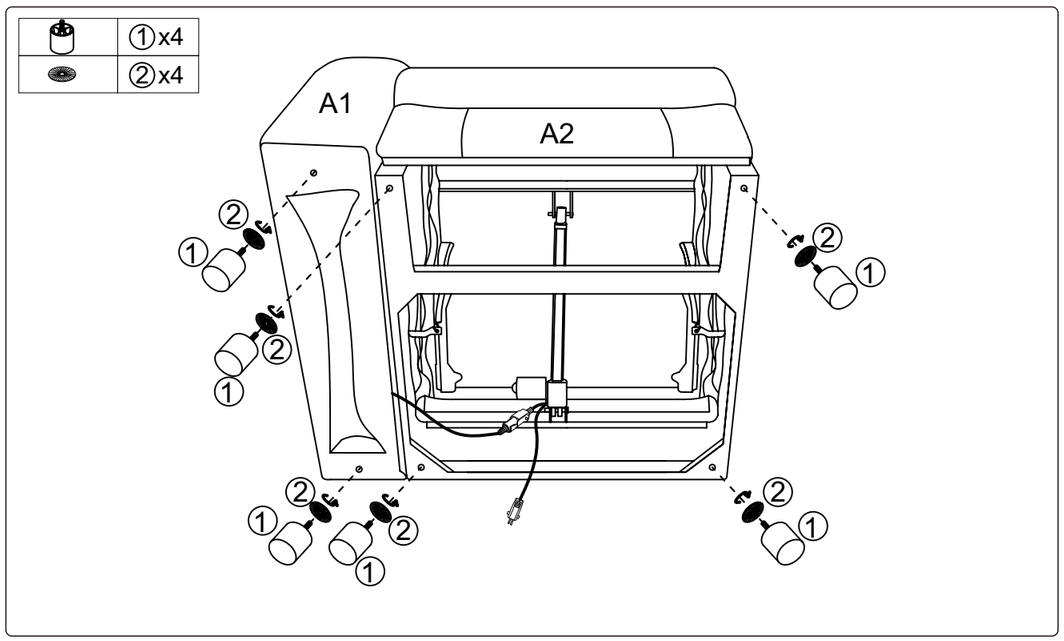

Install Parts ① and ② onto the bottom of Part A1 and Part A2. Tighten securely.

Step 4

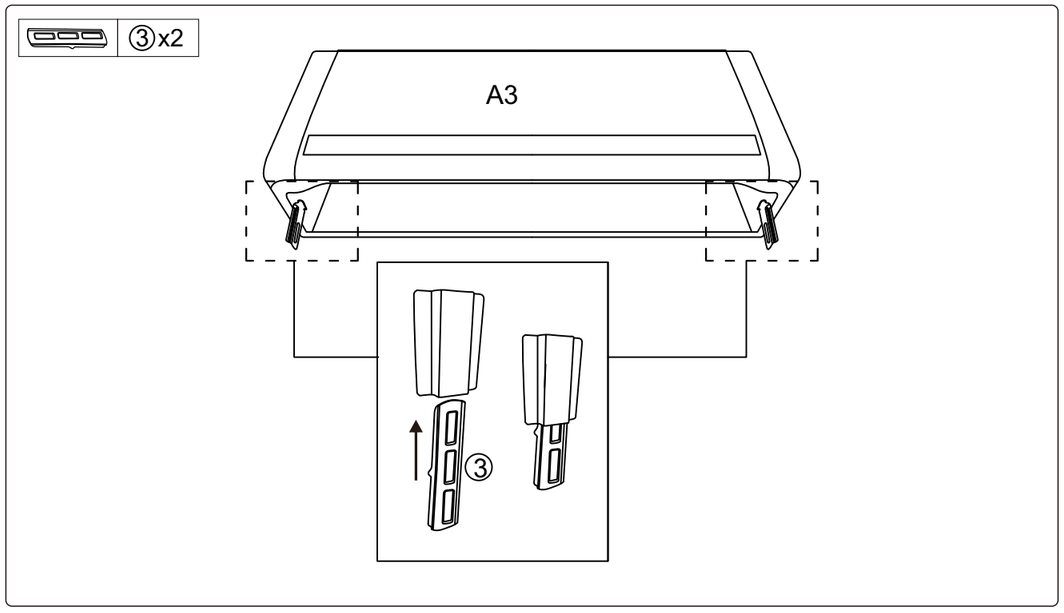

Insert Part ③ into the bottom of Part A3. Make sure the clips reach the top end inside the slot.

Step 5

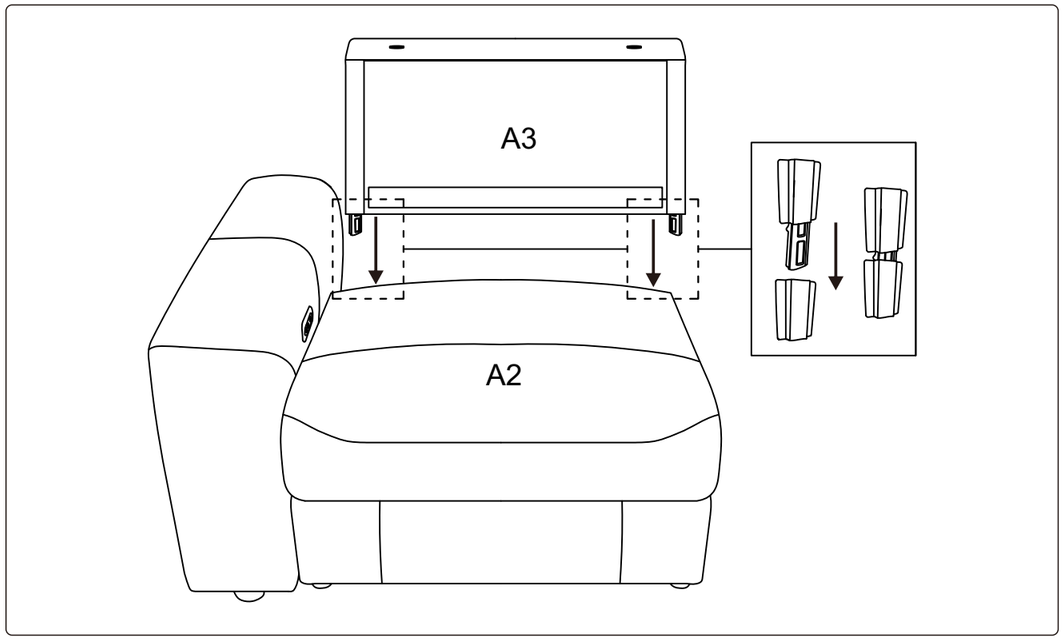

Align Part A3 with the clips on Part A2. Insert it horizontally until fully engaged.

Step 6

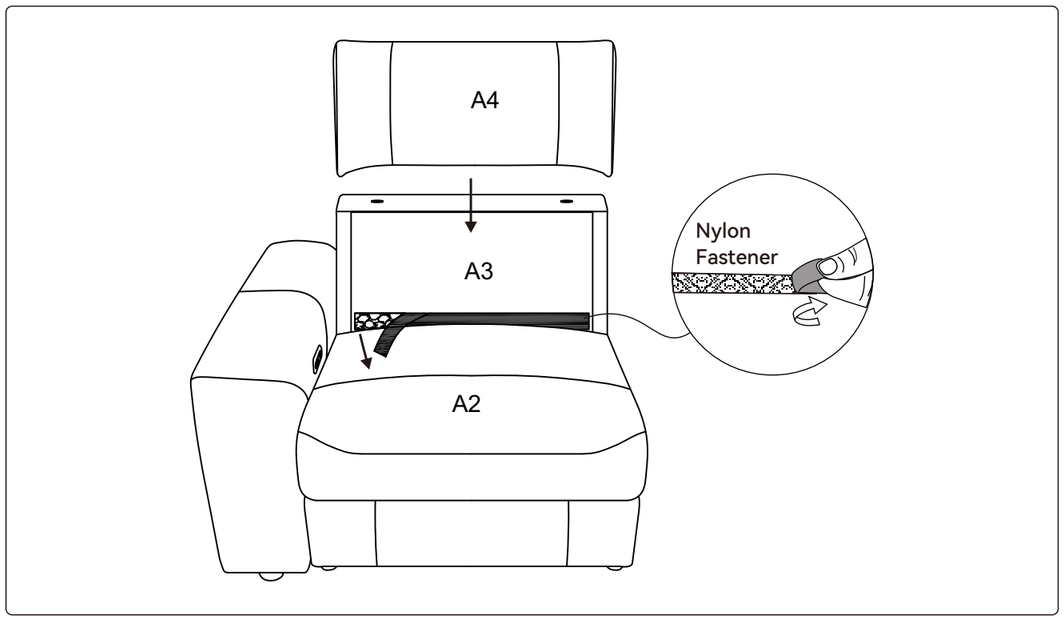

Remove the protective film from the nylon fastener on Part A3.
Place Part A4 and stick it in place.

Step 7

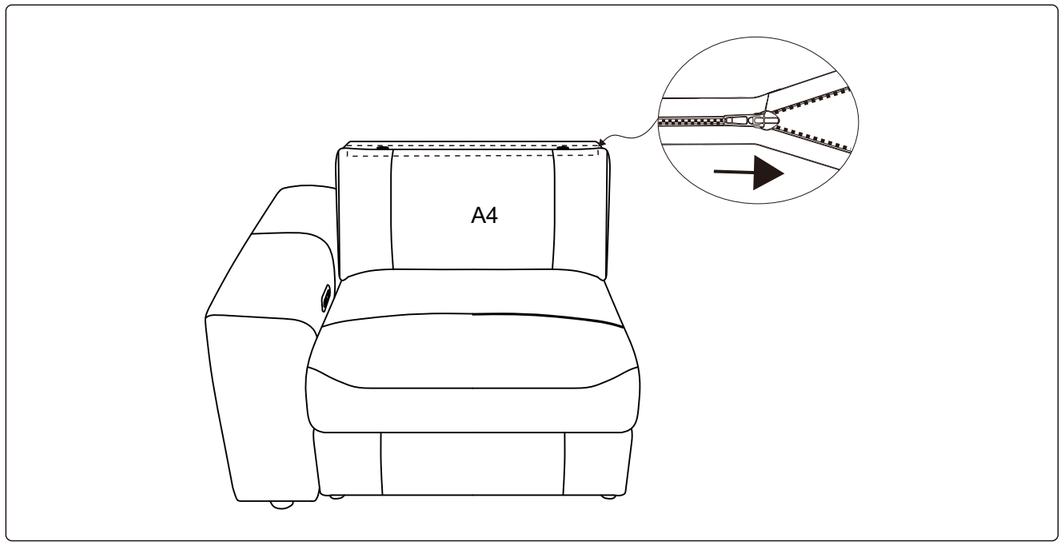

Zip up the top of Part A4. Smooth out any wrinkles.

Step 8

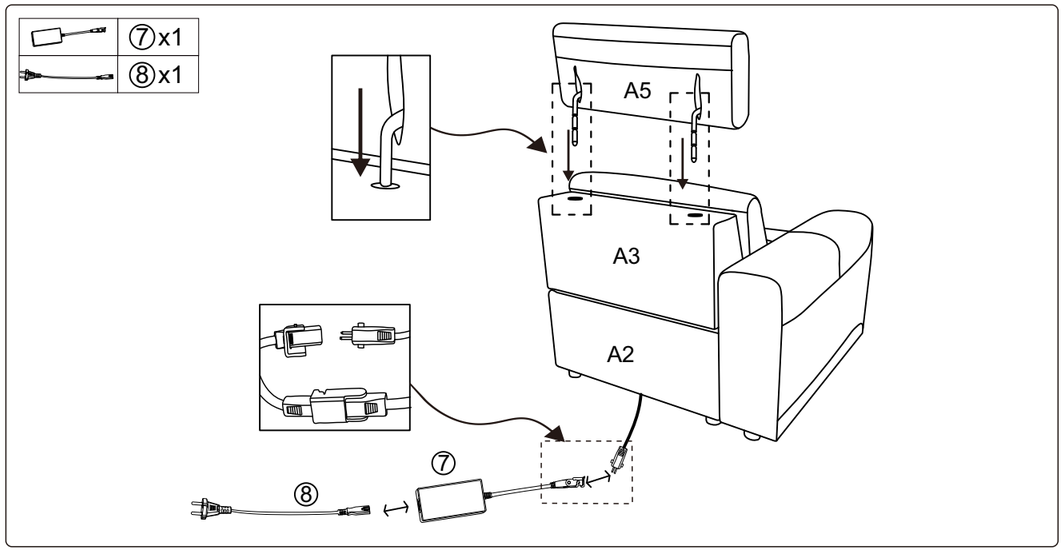

- Align Part A5 with the holes on Part A3, and insert it horizontally with firm pressure until fully seated.
- Plug Part ⑧ into Part ⑦, then connect Part ⑦ to the power cable of Part A2 until it locks into place.

Note:
Ensure the plug and socket are properly aligned before connecting to avoid damage.

Step 9

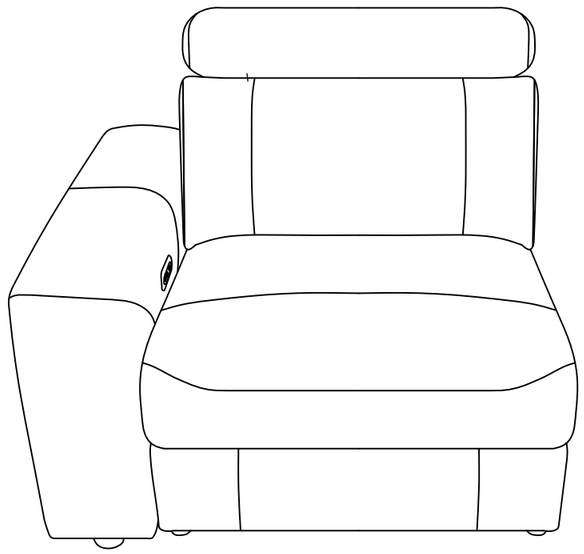

Left armrest seat assembly completed, as shown.

Step 10

	①x4
	②x4

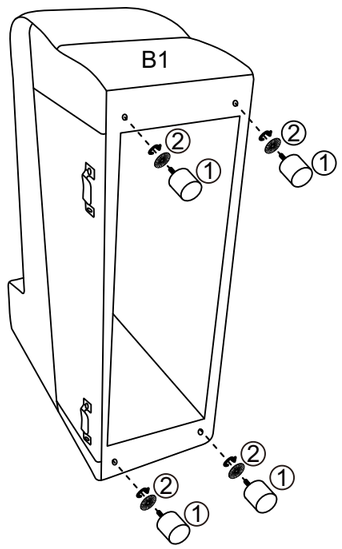

Install Parts ① and ② onto the bottom of Part B1. Tighten securely.

Step 11

	⑤x8
	⑥x1

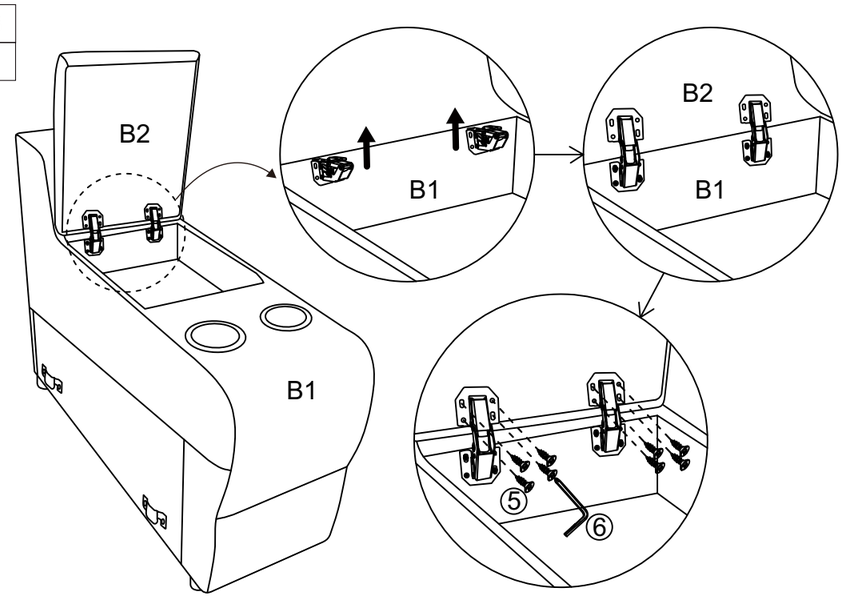

Open the hinges on Part B1. Place Part B2 onto the hinges, aligning it with the positioning holes. Secure Part B2 to Part B1 using Part ⑤ and Part ⑥.

Step 12

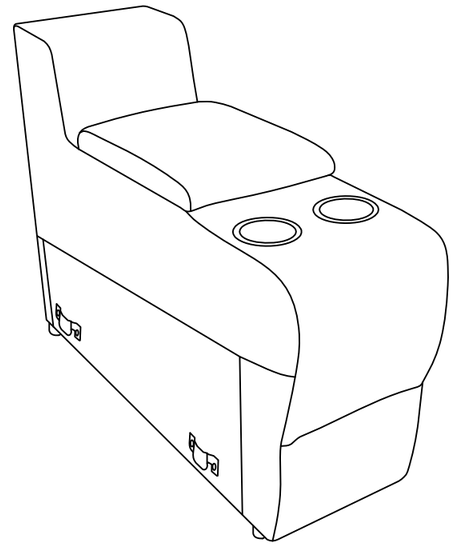

Console unit assembly completed , as shown.

Step 13

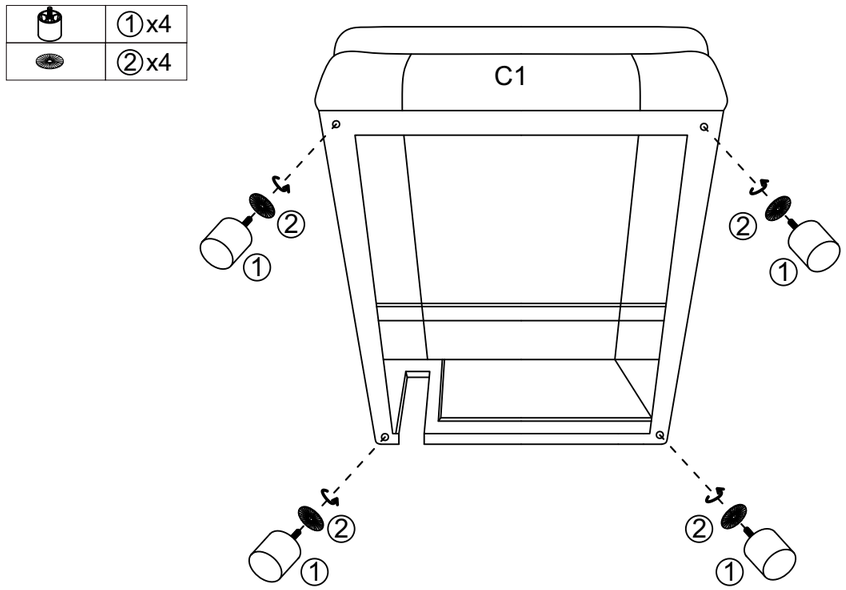

Install Parts ① and ② onto the bottom of Part C1. Tighten securely.

Step 14

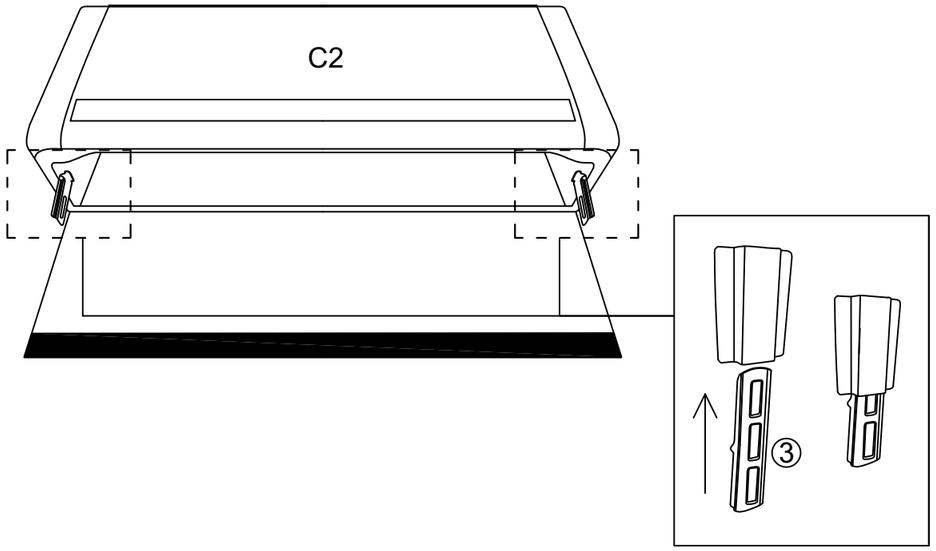

Insert Part ③ into the bottom of Part C2. Make sure the clips reach the top end inside the slot.

Step 15

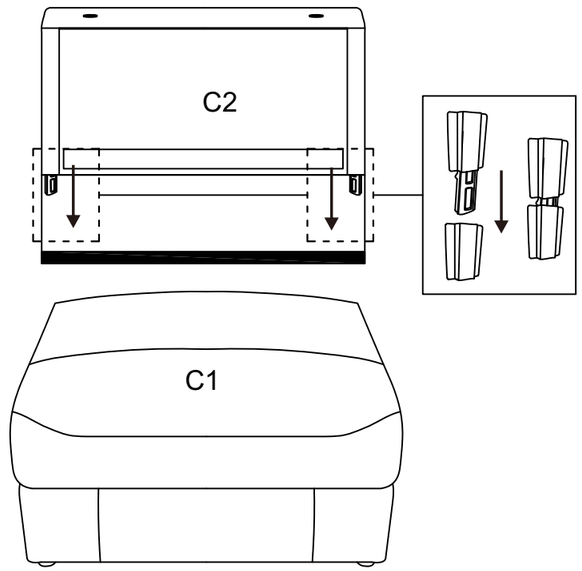

Align Part C2 with the clips on Part C1. Insert it horizontally until fully engaged.

Step 16

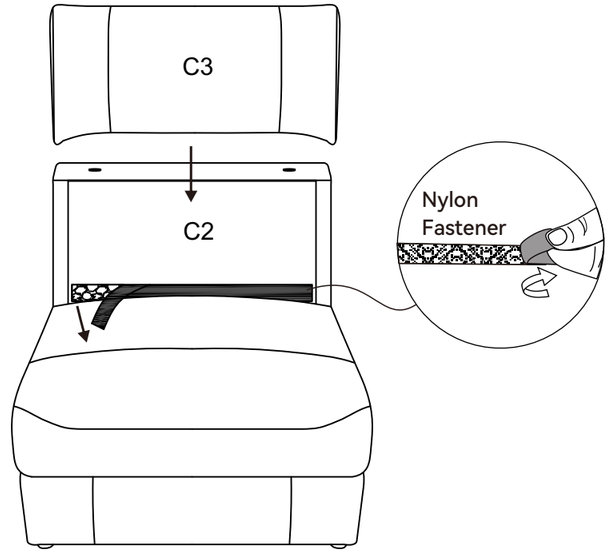

Remove the protective film from the nylon fastener on Part C2.
Place Part C3 and stick it in place.

Step 17

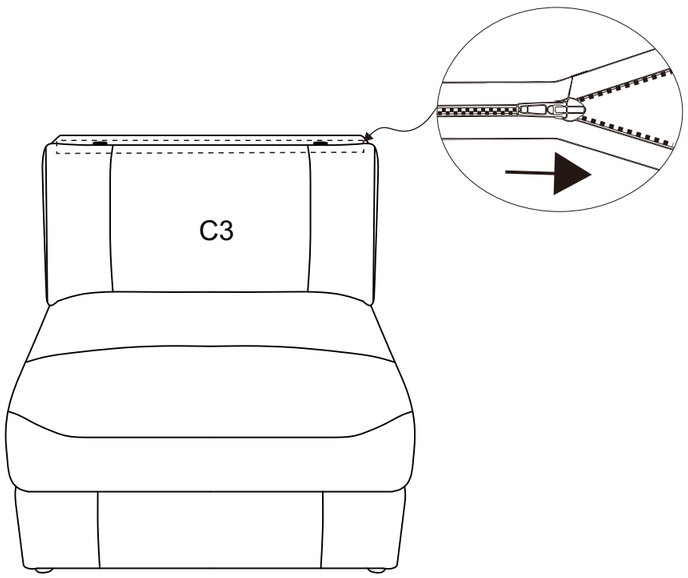

Zip up the top of Part C3. Smooth out any wrinkles.

Step 18

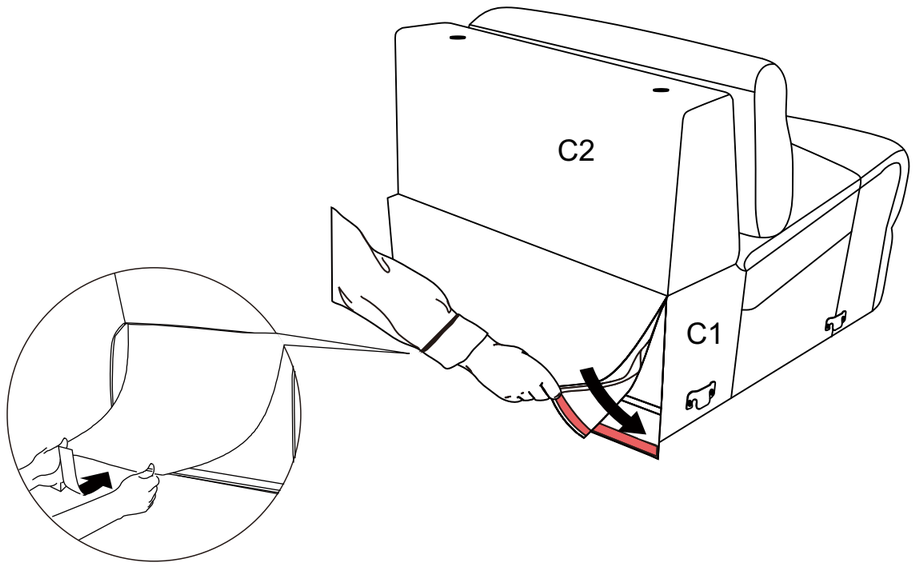

Affix the back cover of Part C2 to Part C1 using the nylon fastener.

Step 19

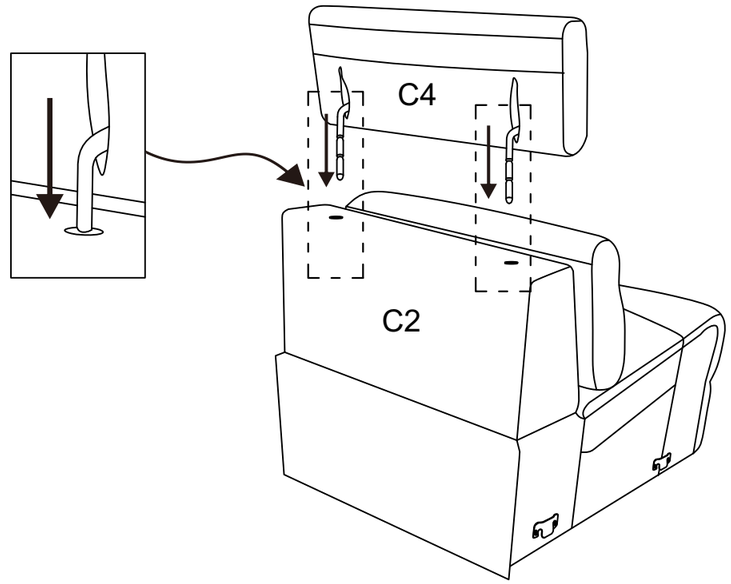

Align Part C4 with the holes on Part C2, and insert it horizontally with firm pressure until fully seated.

Step 20

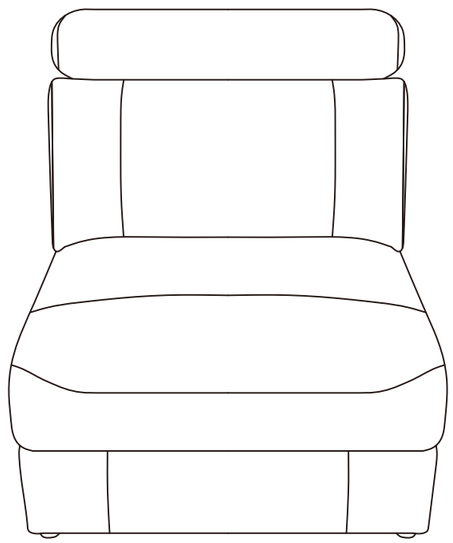

Left middle seat assembly completed, as shown.

Step 21

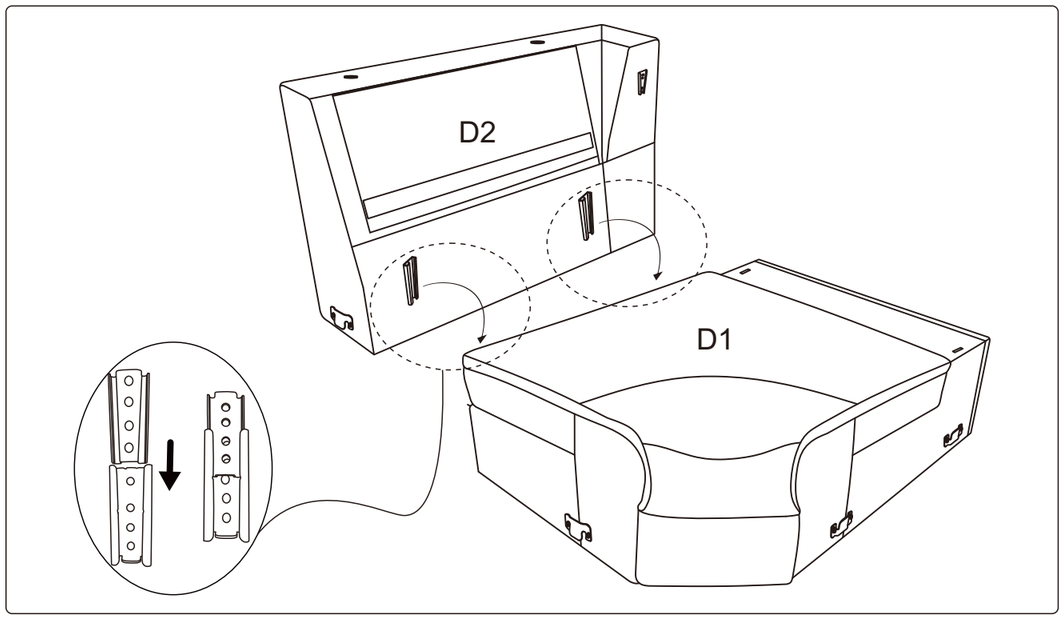

Align the metal connectors, then slide Part D2 horizontally into Part D1 until it is fully seated.

Step 22

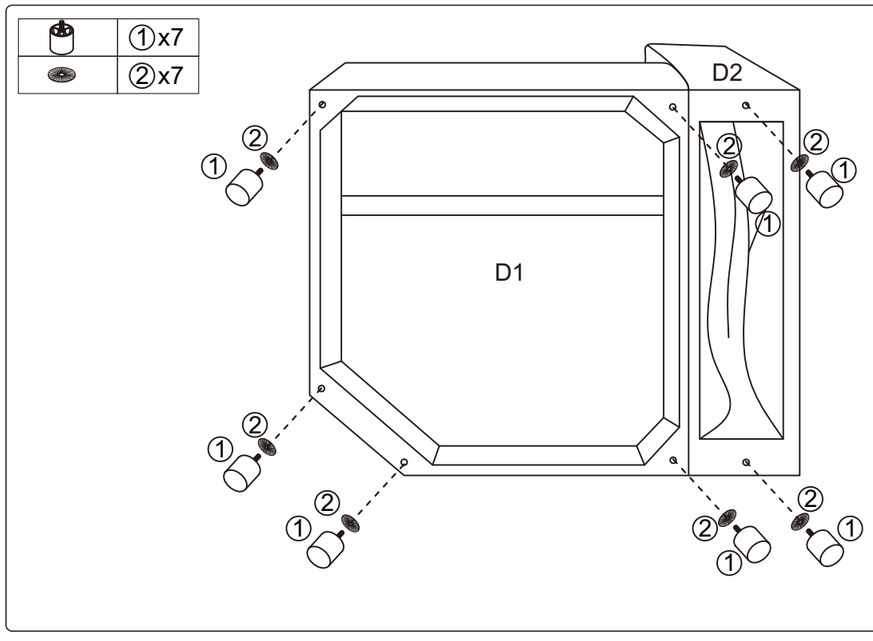

Install Parts ① and ② onto the bottom of Part D1 and Part D2. Tighten securely.

Step 23

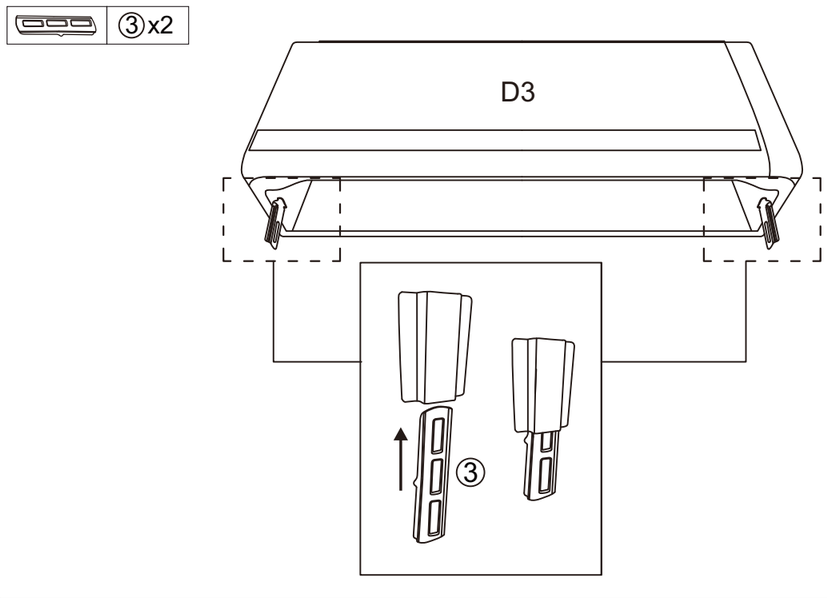

Insert Part ③ into the bottom of Part D3. Make sure the clips reach the top end inside the slot.

Step 24

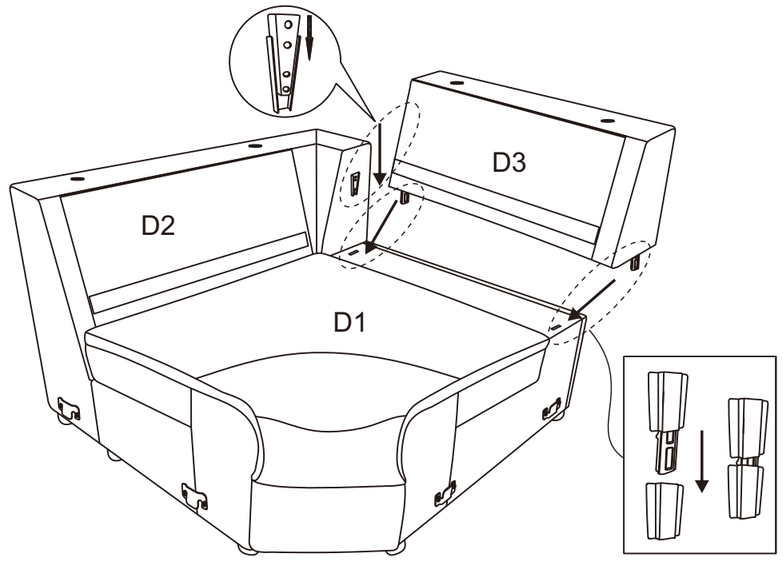

Align Part D3 with the clips on Part D1. Insert it horizontally with firm pressure until fully engaged.

Step 25

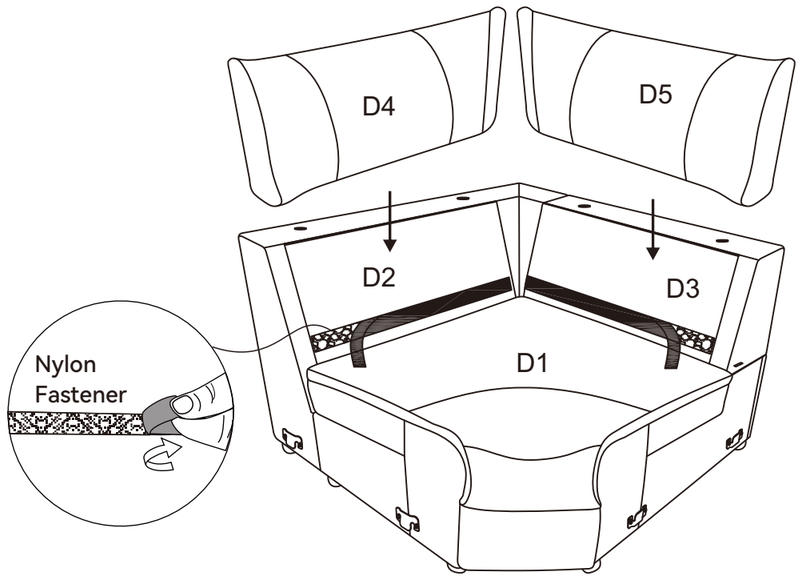

Remove the protective film from the nylon fastener on Parts D2 and D3.
Place Parts D4 and D5 and stick them in place.

Step 26

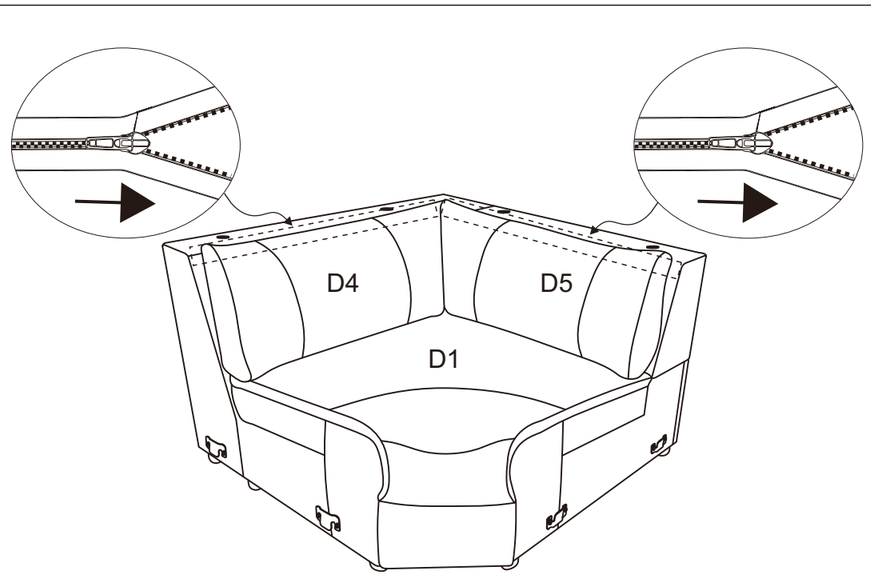

Zip up the top of Part D4 and Part D5. Smooth out any wrinkles.

Step 27

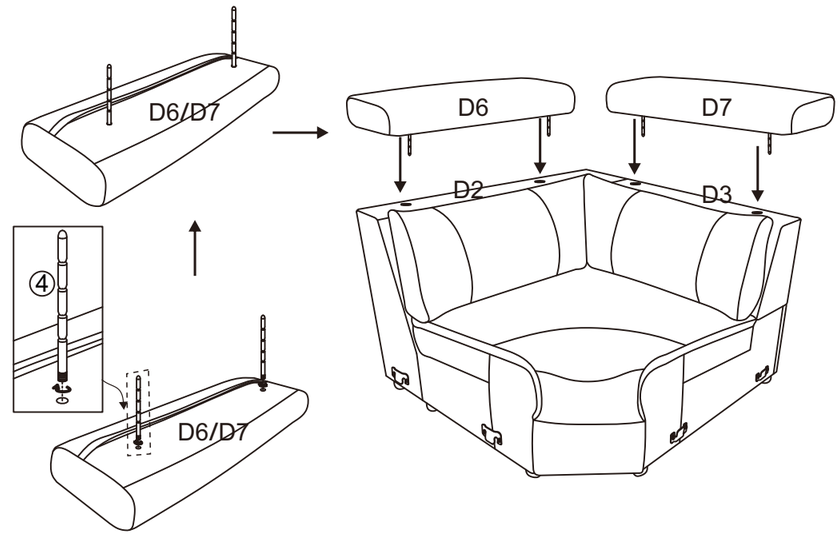

- Screw Part ④ into Parts D6 and D7, tighten securely.
- Align Part D6 with Part D2 and Part D7 with Part D3, insert them horizontally into the holes with firm pressure until fully seated.

Step 28

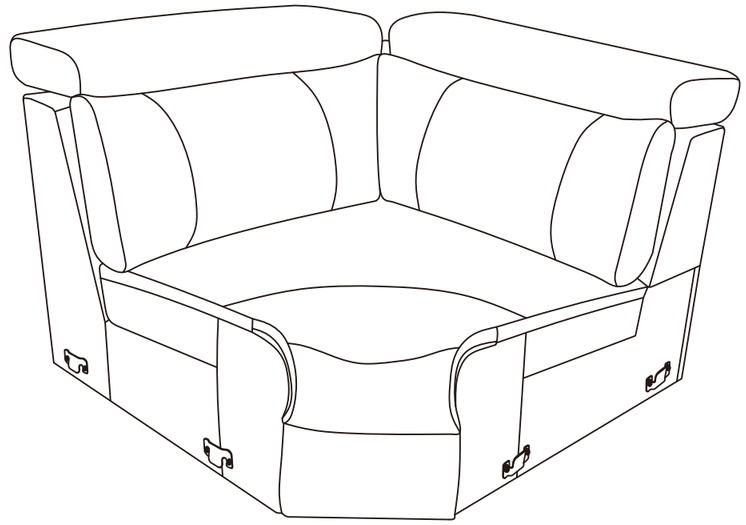

Corner seat assembly completed, as shown.

Step 29

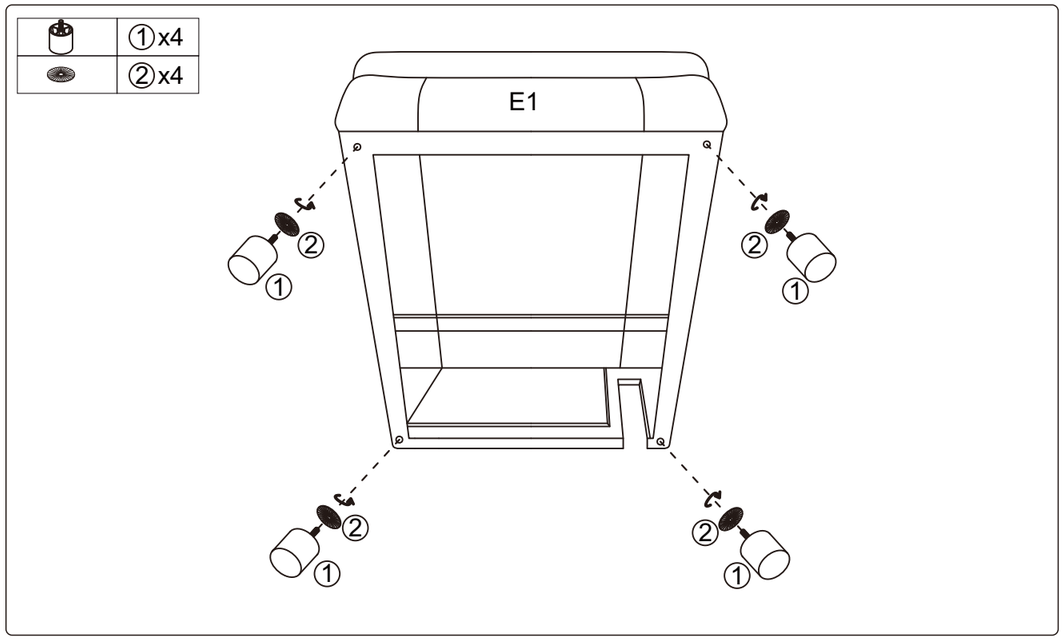

Install Parts ① and ② onto the bottom of Part E1. Tighten securely.

Step 30

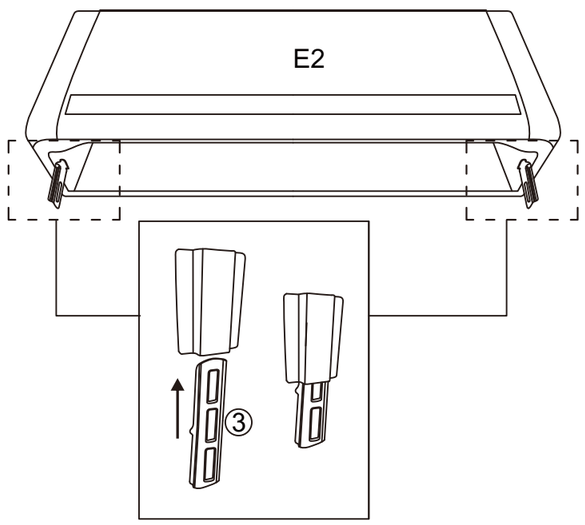

Insert Part ③ into the bottom of Part E2. Make sure the clips reach the top end inside the slot.

Step 31

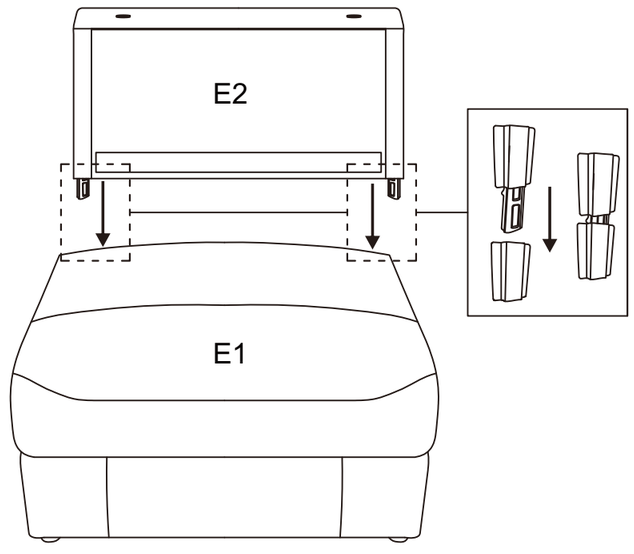

Align Part E2 with the clips on Part E1. Insert it horizontally until fully engaged.

Step 32

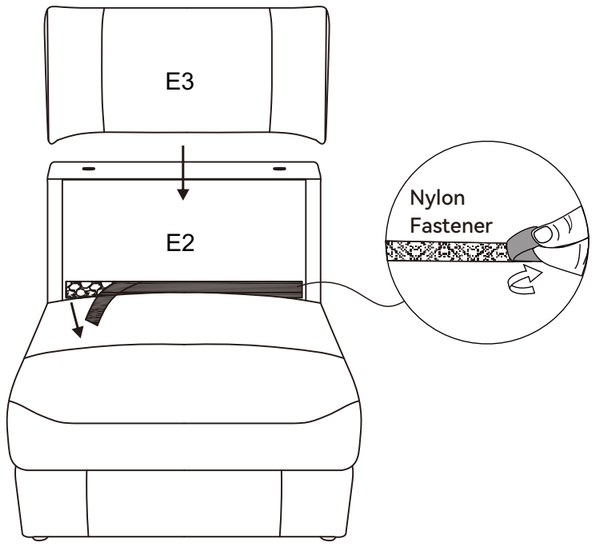

Remove the protective film from the nylon fastener on Part E2.
Place Part E3 onto it and stick it in place.

Step 33

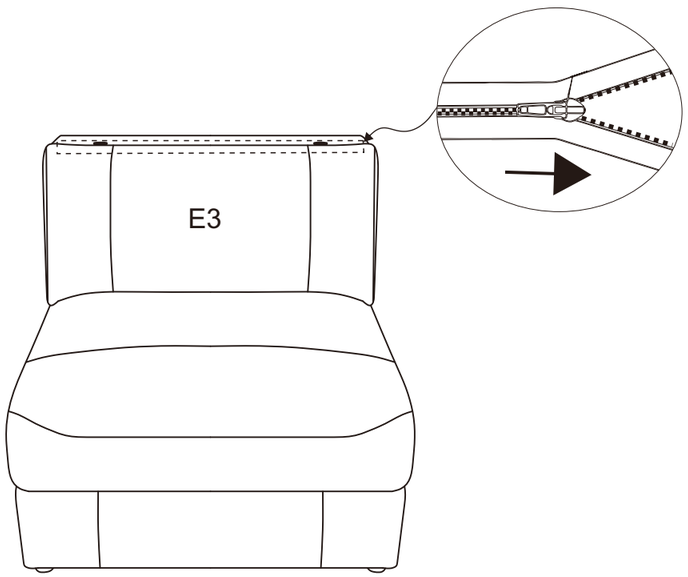

Zip up the top of Part E3. Smooth out any wrinkles.

Step 34

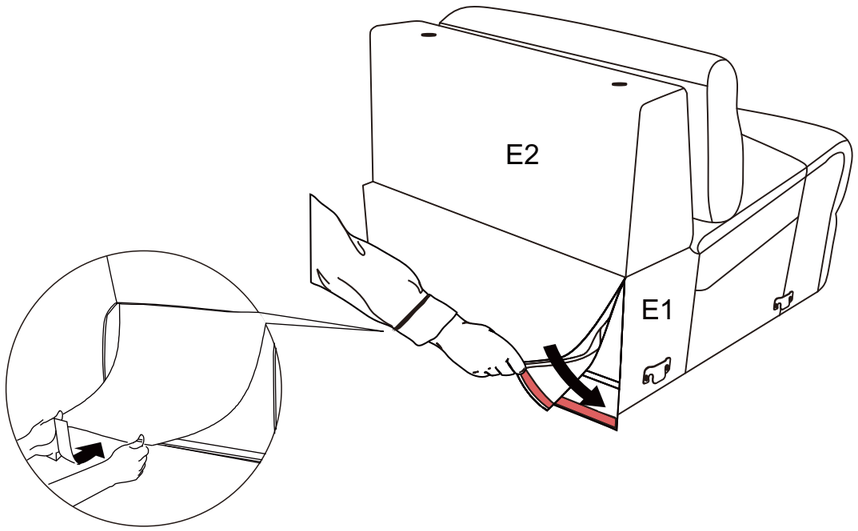

Affix the back cover of Part E2 to Part E1 using the nylon fastener.

Step 35

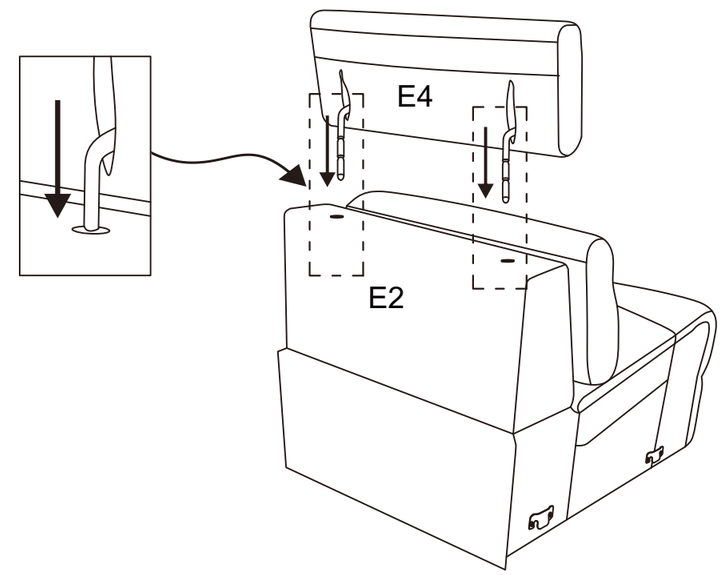

Insert Part E4 into Part E2. Align the corresponding holes and insert it horizontally with firm pressure until fully seated.

Step 36

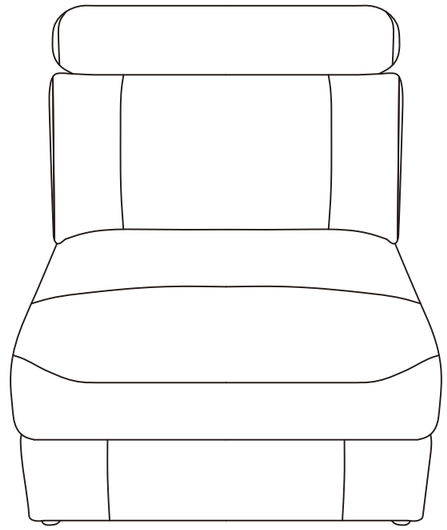

The right middle seat assembly complete, as shown.

Step 37

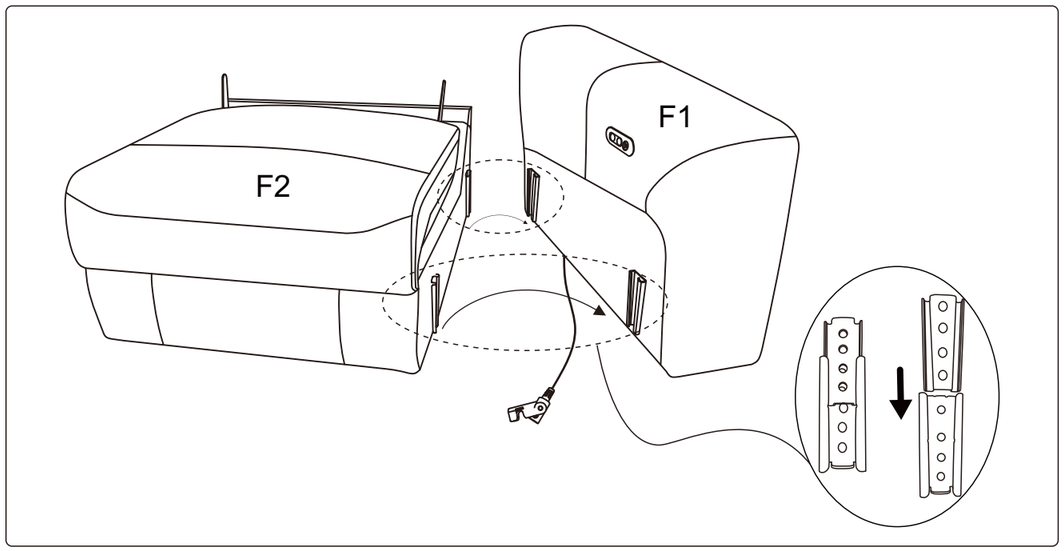

Align the metal connectors, slide Part F2 horizontally into Part F1 until fully seated.

Note:
Make sure to keep the power cord out of the way during installation.

Step 38

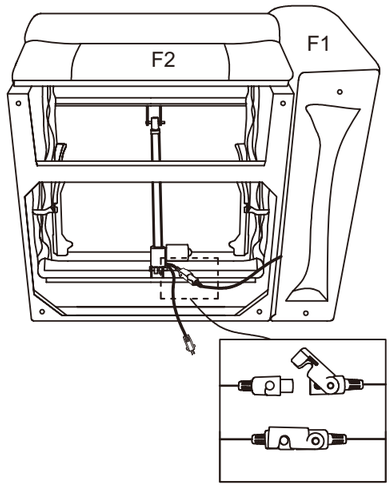

Turn the unit over and connect the power cables of Part F2 and Part F1.

Note:
Ensure the plug and socket are properly aligned before connecting to avoid damage.

Step 39

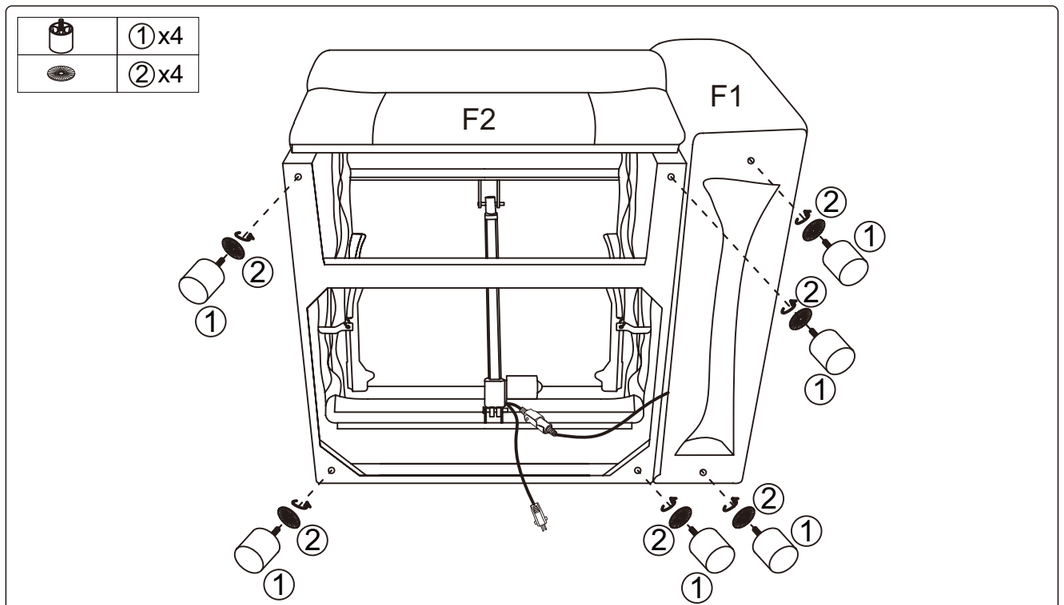

Install Parts ① and ② onto the bottom of Part F1 and Part F2. Tighten securely.

Step 40

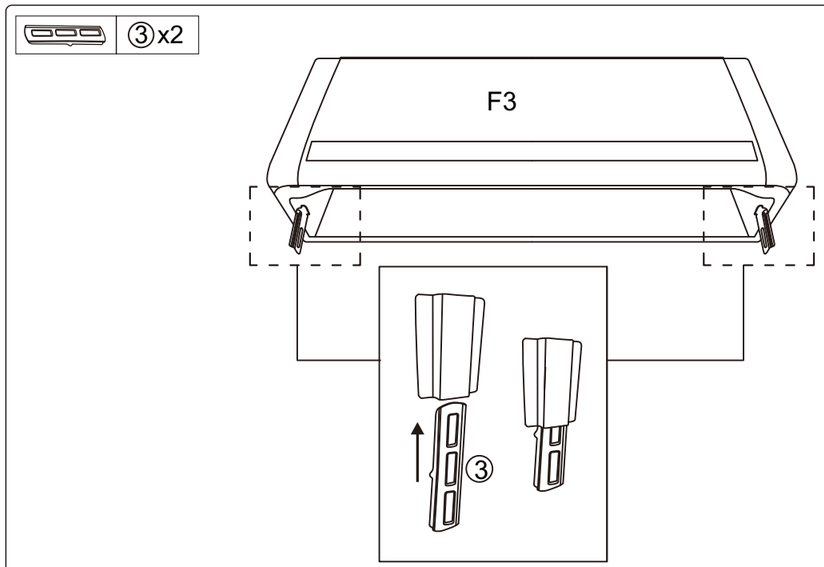

Insert Part ③ into the bottom of Part F3. Make sure the clips reach the top end inside the slot.

Step 41

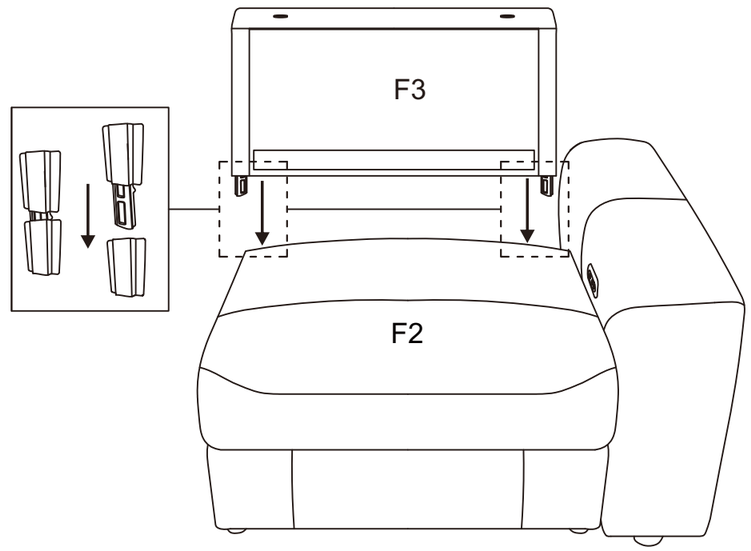

Align Part F3 with the clips on Part F2. Insert it horizontally until fully engaged.

Step 42

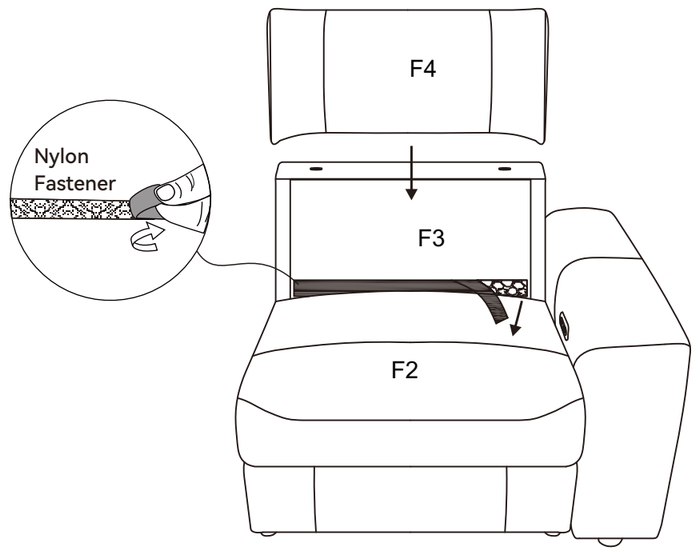

Remove the protective film from the nylon fastener on Part F3.
Place Part F4 onto it and stick it in place.

Step 43

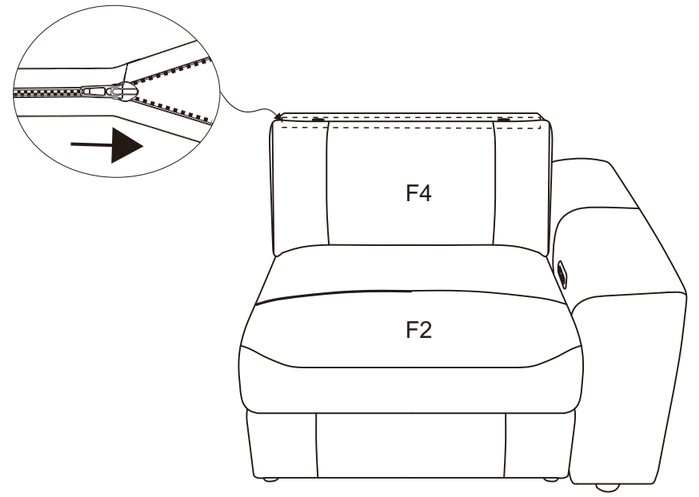

Zip up the top of Part F4. Smooth out any wrinkles.

Step 44

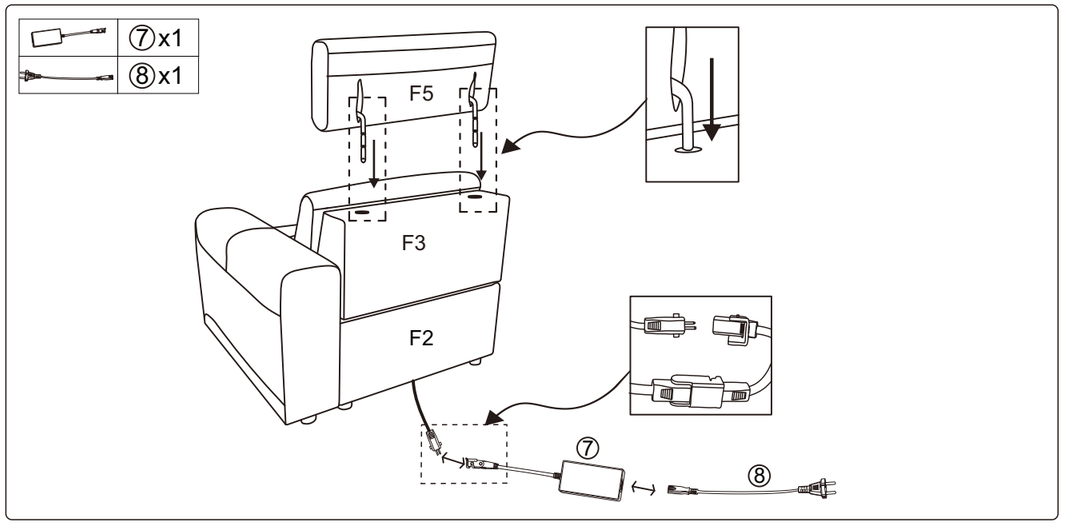

- Align Part F5 with the holes on Part F3, and insert it horizontally with firm pressure until fully seated.
- Plug Part ⑧ into Part ⑦, then connect Part ⑦ to the power cable of Part F2 until it locks into place.

Note:
Pay attention to the orientation of the plug and socket to avoid incorrect insertion or damage.

Step 45

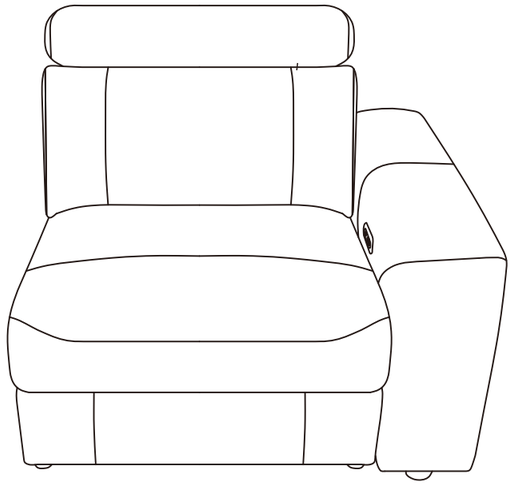

Right armrest seat assembly completed, as shown.

Step 46

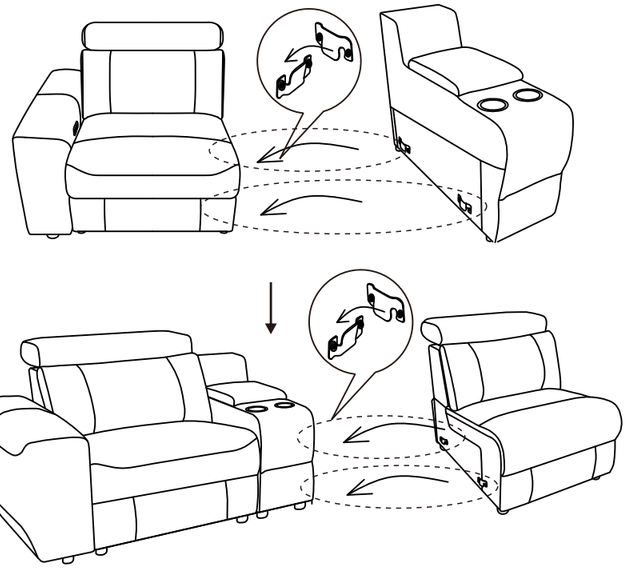

Seat-to-Seat Assembly Instructions:

- Align the metal connectors. Slide the console into the left armrest seat, then slide the middle seat into the console.
- Insert each seat horizontally with firm pressure until fully seated.

Step 47

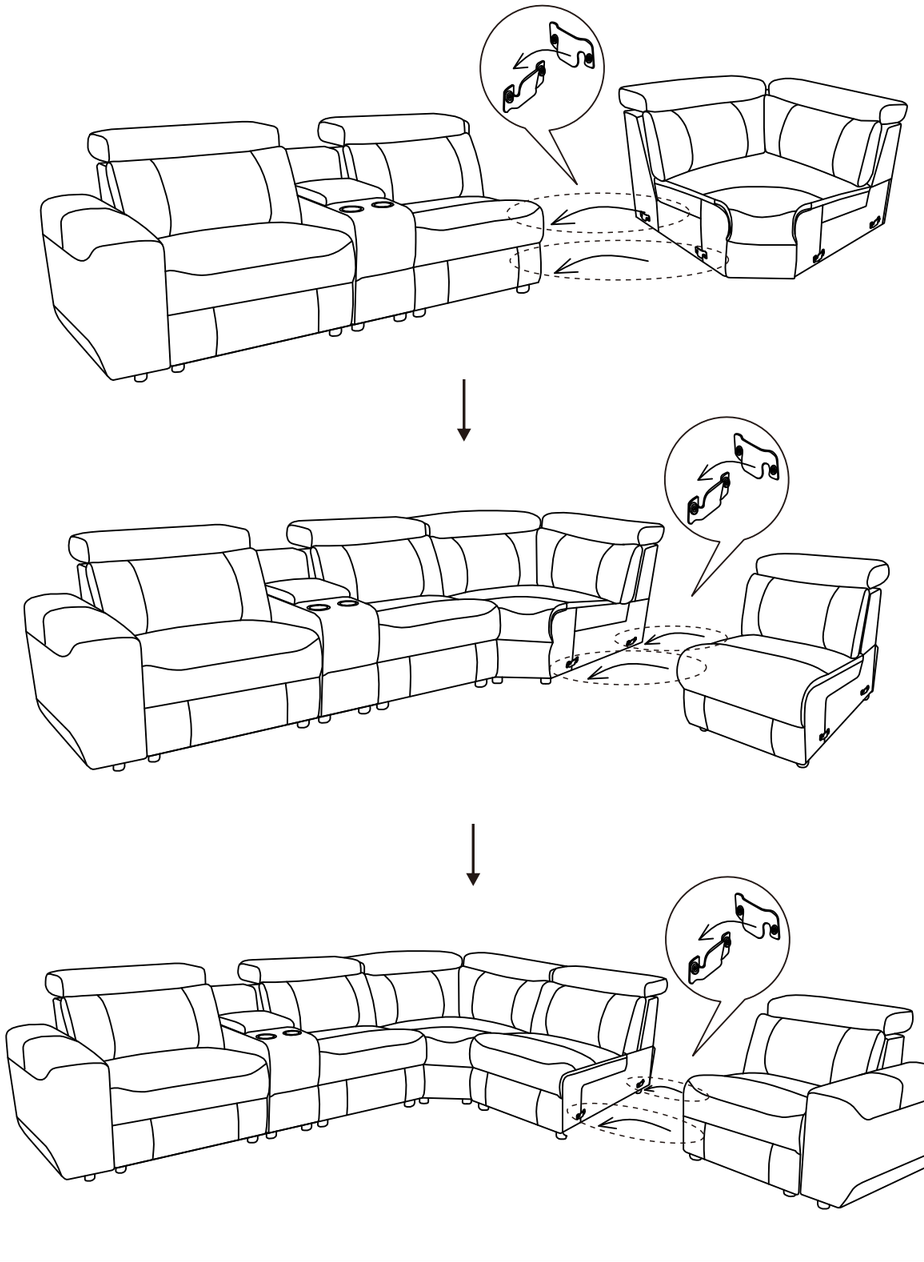

Seat-to-Seat Assembly Instructions:

- Align the metal connectors in sequence as shown.
- Insert each seat horizontally with firm pressure until fully seated.
- Assembly complete.

Step 48

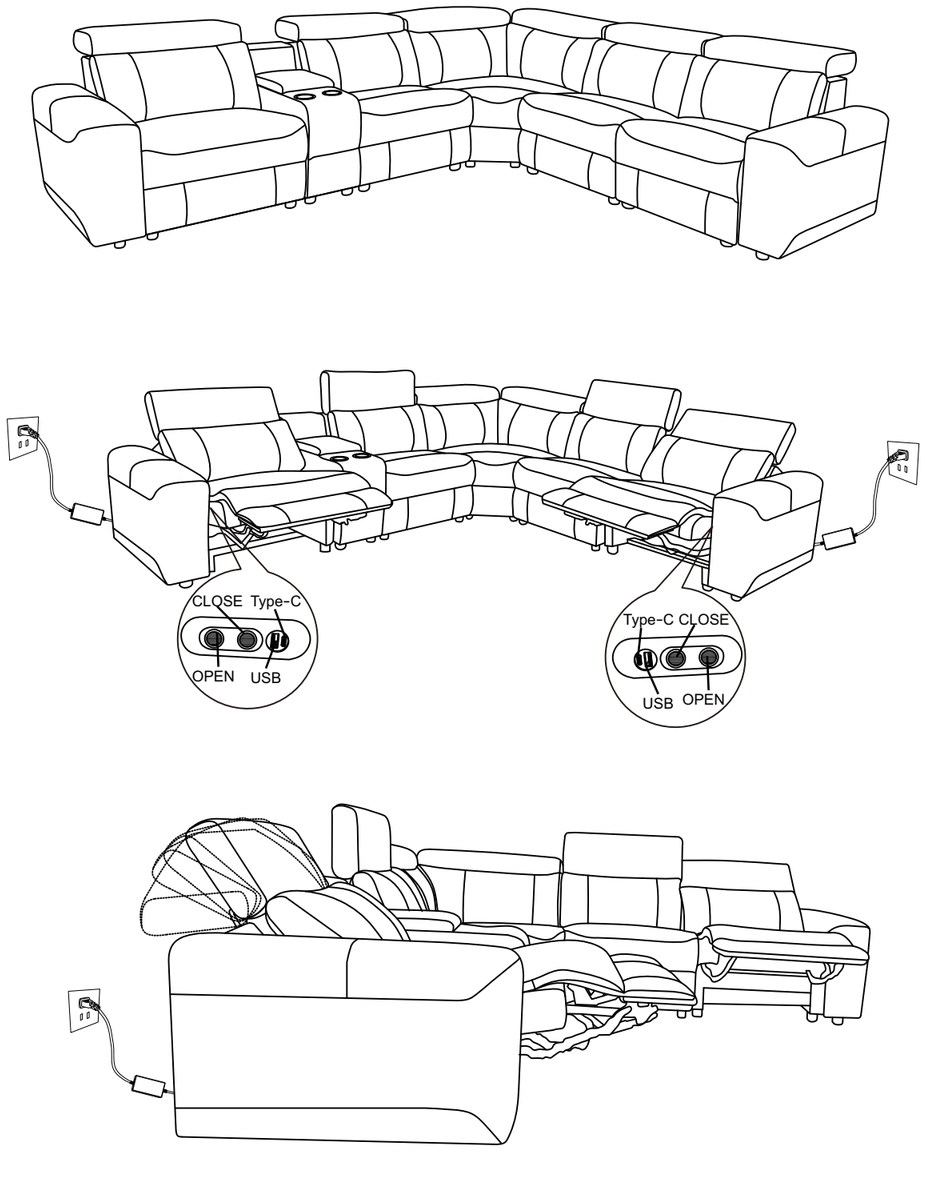

- Plug the power cords on both sides into power outlets.
- Press the buttons located on the inner side of the armrest to adjust the recline.

Note:
Before turning on the power, make sure all plugs are connected correctly and securely, and that the power cables are not pinched under the frame.

Maintenance

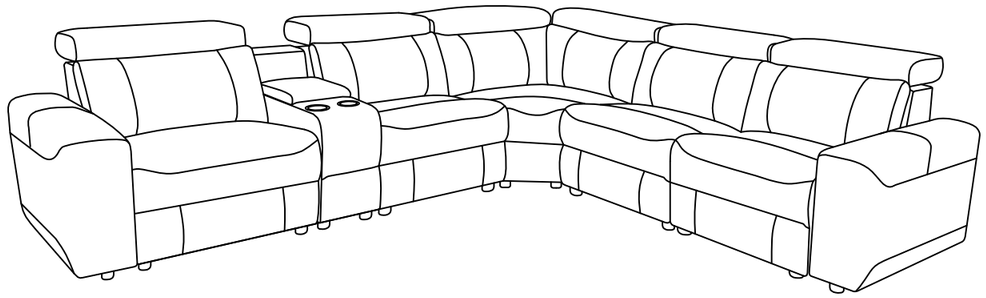

1. Avoid direct sunlight, preferably placed in a place that can avoid sunlight, or use translucent tulle curtains to block the sun.
2. Vacuum at least once a week, paying particular attention to removing dust accumulation between fabric structures.
3. Sofa cushions are turned over once a week to evenly distribute wear.
4. If stained, use a clean cloth dipped in water to wipe. In order to avoid leaving marks, it is best to wipe from the periphery of the stain. Velvet furniture should not be dipped in water and should use a dry cleaning agent.
5. All cloth covers and bushings should be dry-cleaned, not washed, not bleached.
6. If you find loose thread, do not tear it with your hand; it is best to cut the thread neatly with scissors.