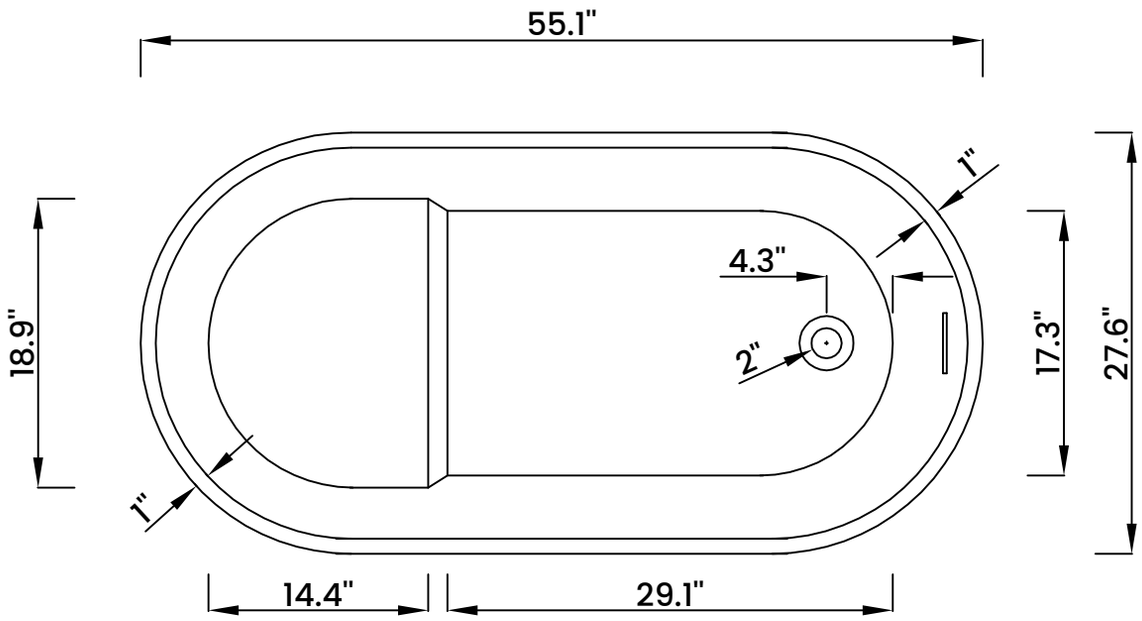
55.1"
18.9"
1"
4.3"
2"
1"
17.3"
27.6"
14.4"
29.1"

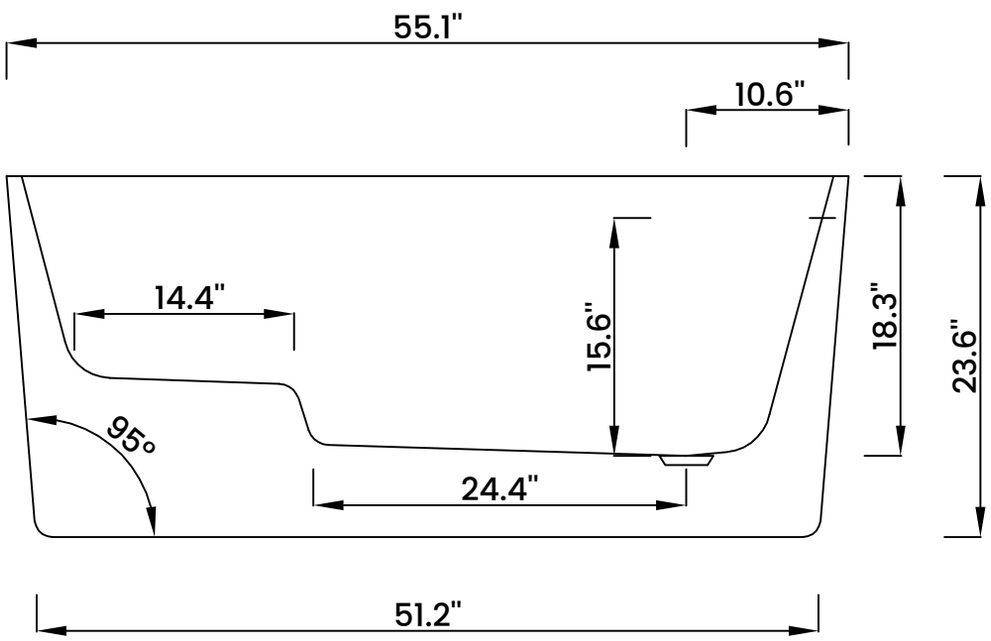
55.1"
10.6"
14.4"
95°
15.6"
24.4"
18.3"
23.6"

51.2"

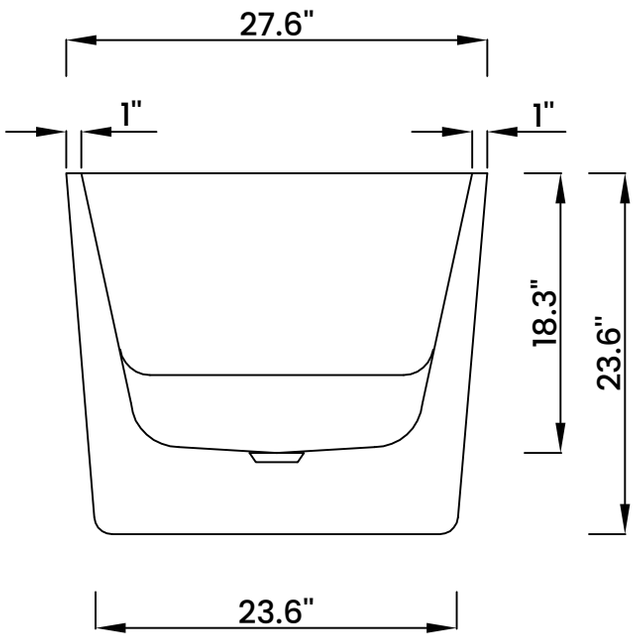
27.6"
1"
1"
18.3"
23.6"
23.6"