ASSEMBLY INSTRUCTIONS

Read this instruction carefully. Refer hardware and furniture parts list for guidance. Be sure all parts are complete before assembling. Place all wooden furniture part on a clean and flat soft surface to prevent scratches. Refer steps provided as assembling guide.

PART LIST		
ITEM	DESCRIPTION	QTY
A	Table Top	1 SET
B	Table Leg	4 PCS
C	Center Panel	1 PCS

HARDWARE LIST		
ITEM	DESCRIPTION	QTY
1	JCBC Screw M6 x 45mm	8 PCS
2	Spring Washer M6 x 13mm	8 PCS
3	Flat Washer M6 x 16mm	8 PCS
4	Allen Key M4 x 55mm	1 PC
5	HEX NUT 5 / 16	8 PCS
6	Spring Washer M8 x 14mm	8 PCS
7	Flat Washer M8 x 22mm	8 PCS
8	OPEN-END WRENCH M12.8	1 PC
9	Adjuster M6 x 16mm	4 PCS

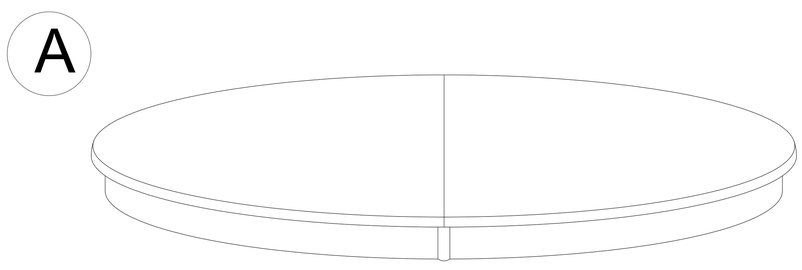

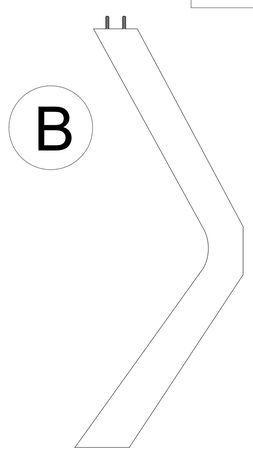

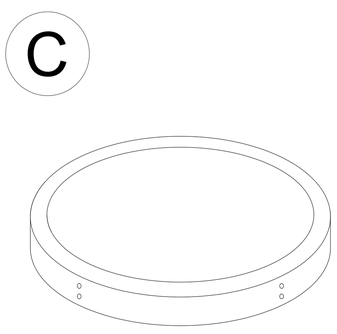

STEP 1

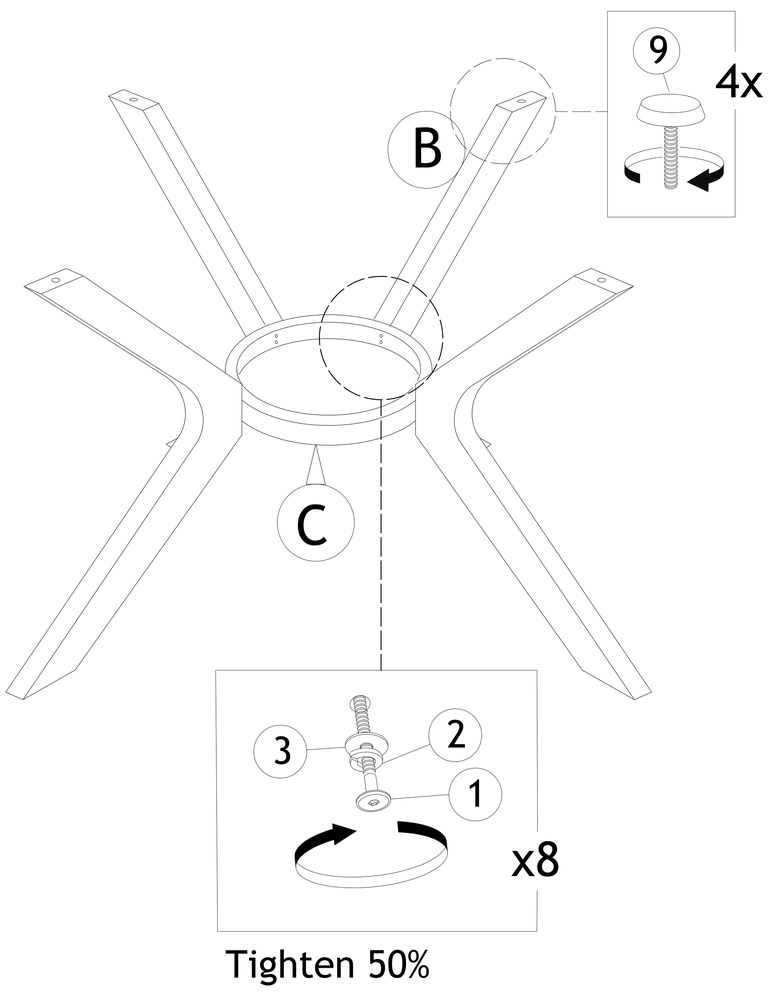

STEP 2

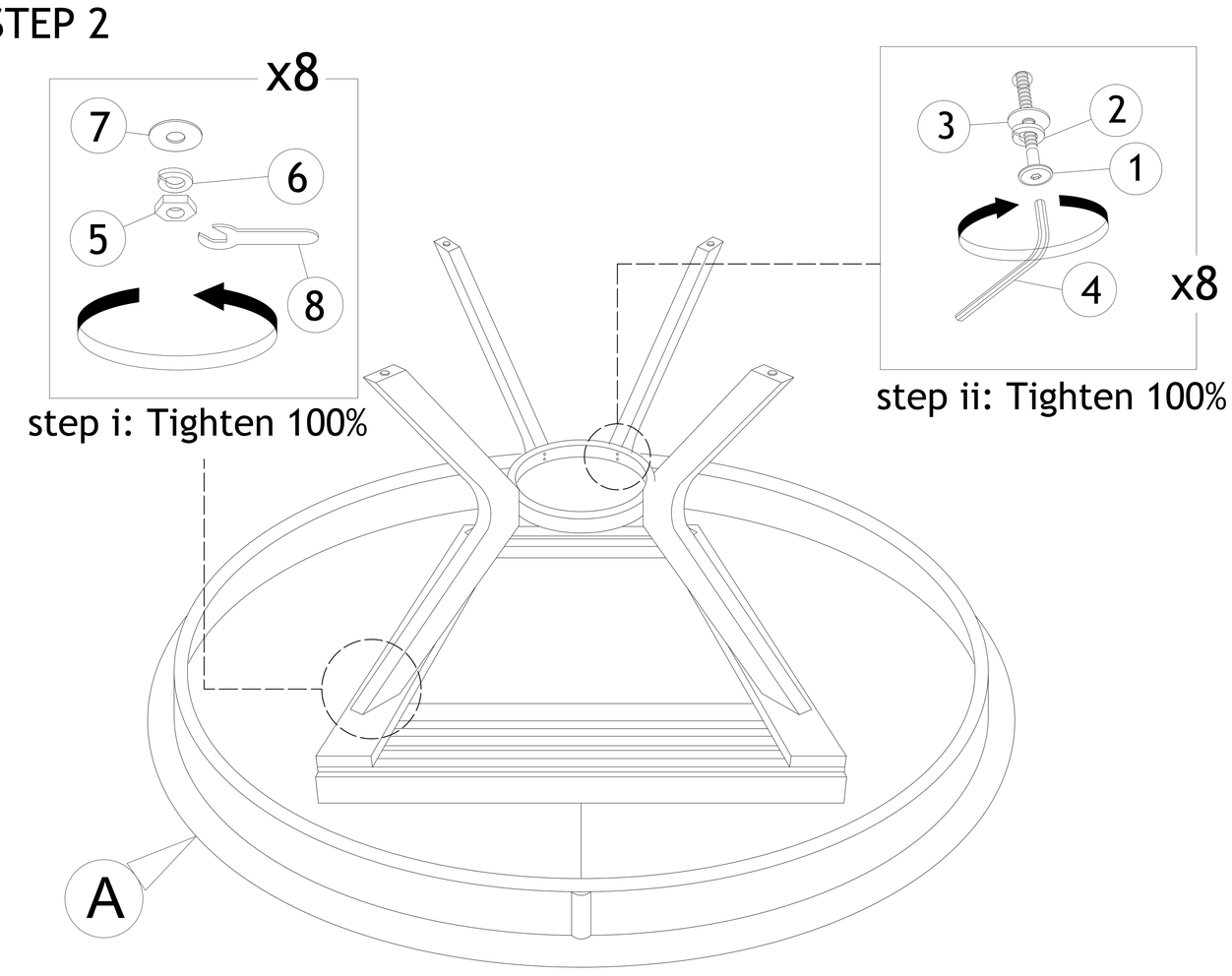

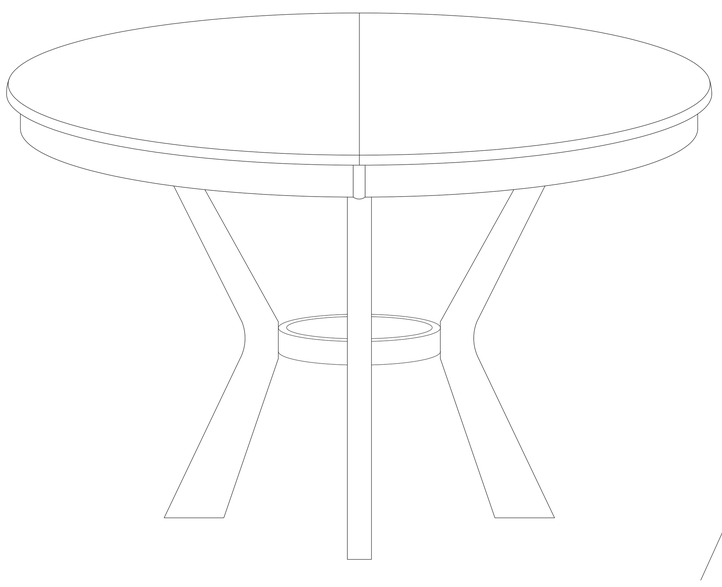

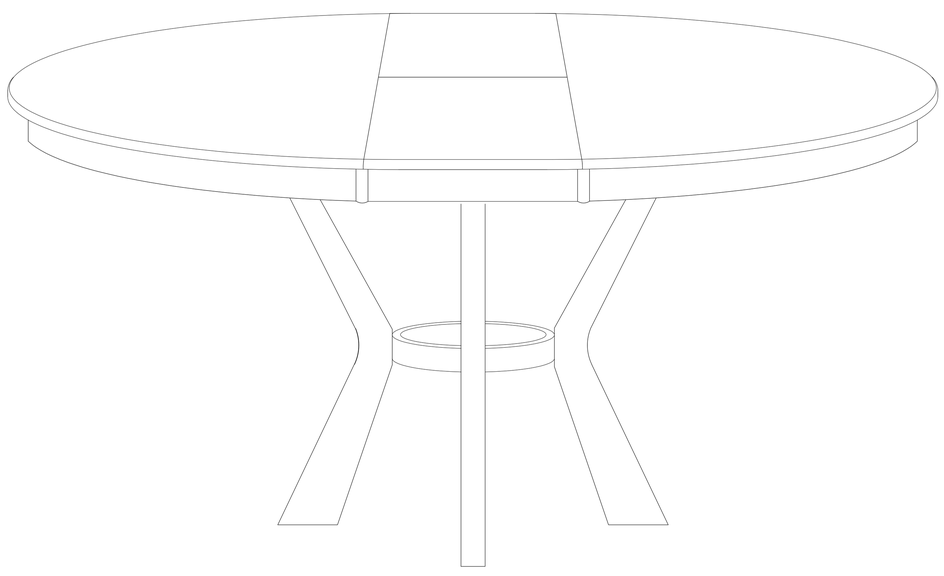

COMPLETED ASSEMBLY