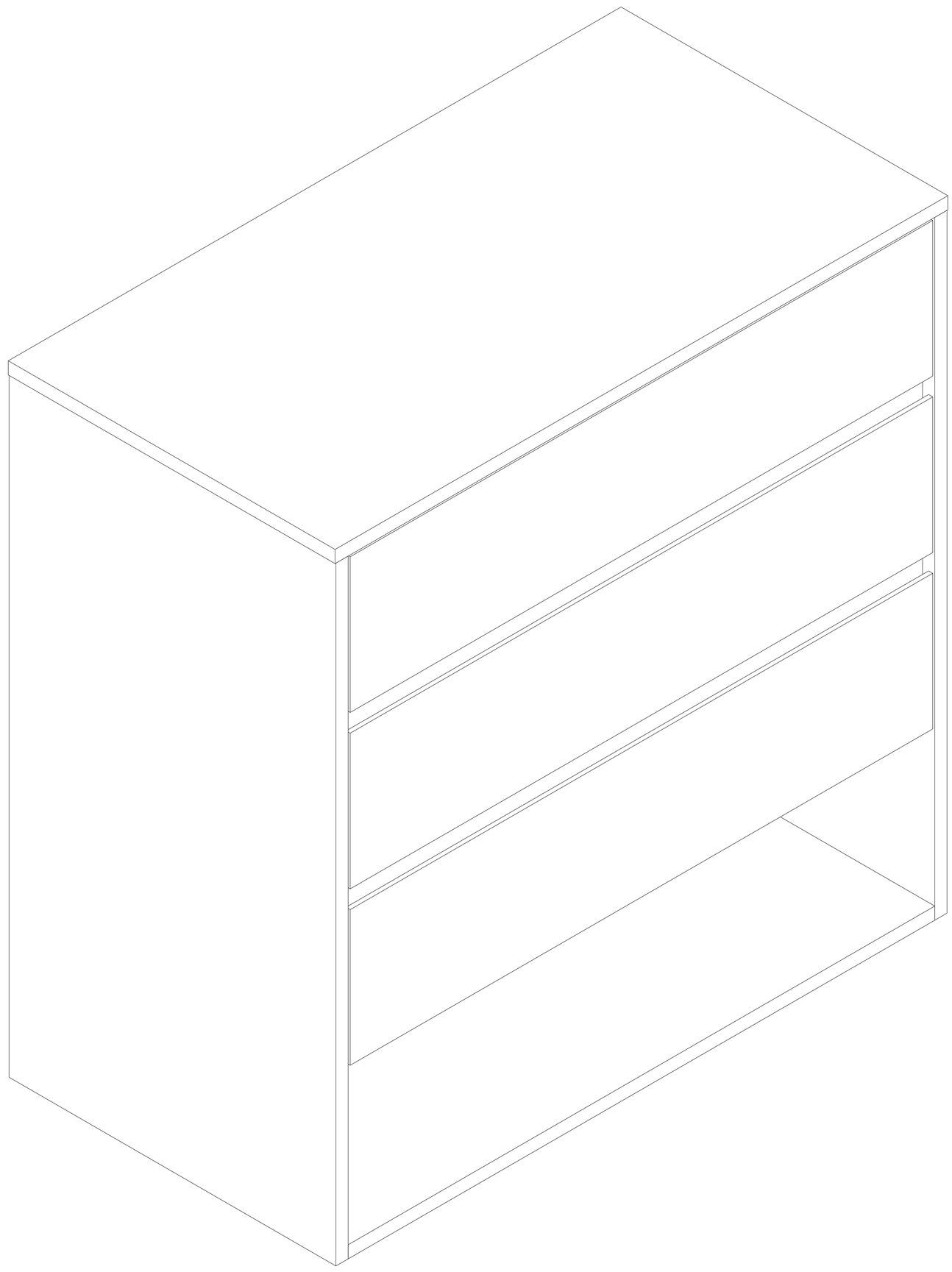

Disassembly and installation of accessories

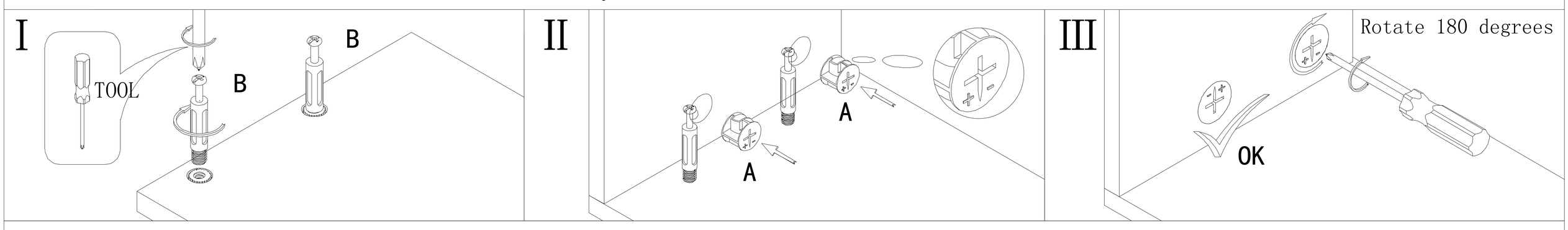

A 24PCS	B 24PCS	C 8PCS	D 38PCS	E 36PCS	F 3PCS	G 14PCS
	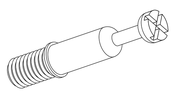		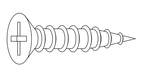	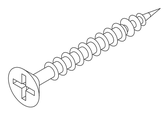	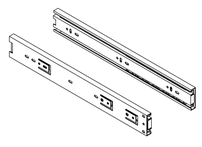	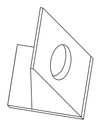
ϕ12*10mm	ϕ6*25mm	ϕ8*30mm	ϕ3.5*14mm	ϕ3.5*35mm	35/12"	12*10mm
H 36PCS	I 9PCS	J 4PCS	K	L	M	N
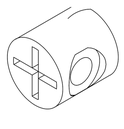	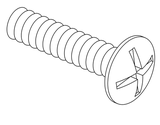	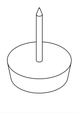				
ϕ9*9mm	ϕ6*25mm	ϕ10*5mm				

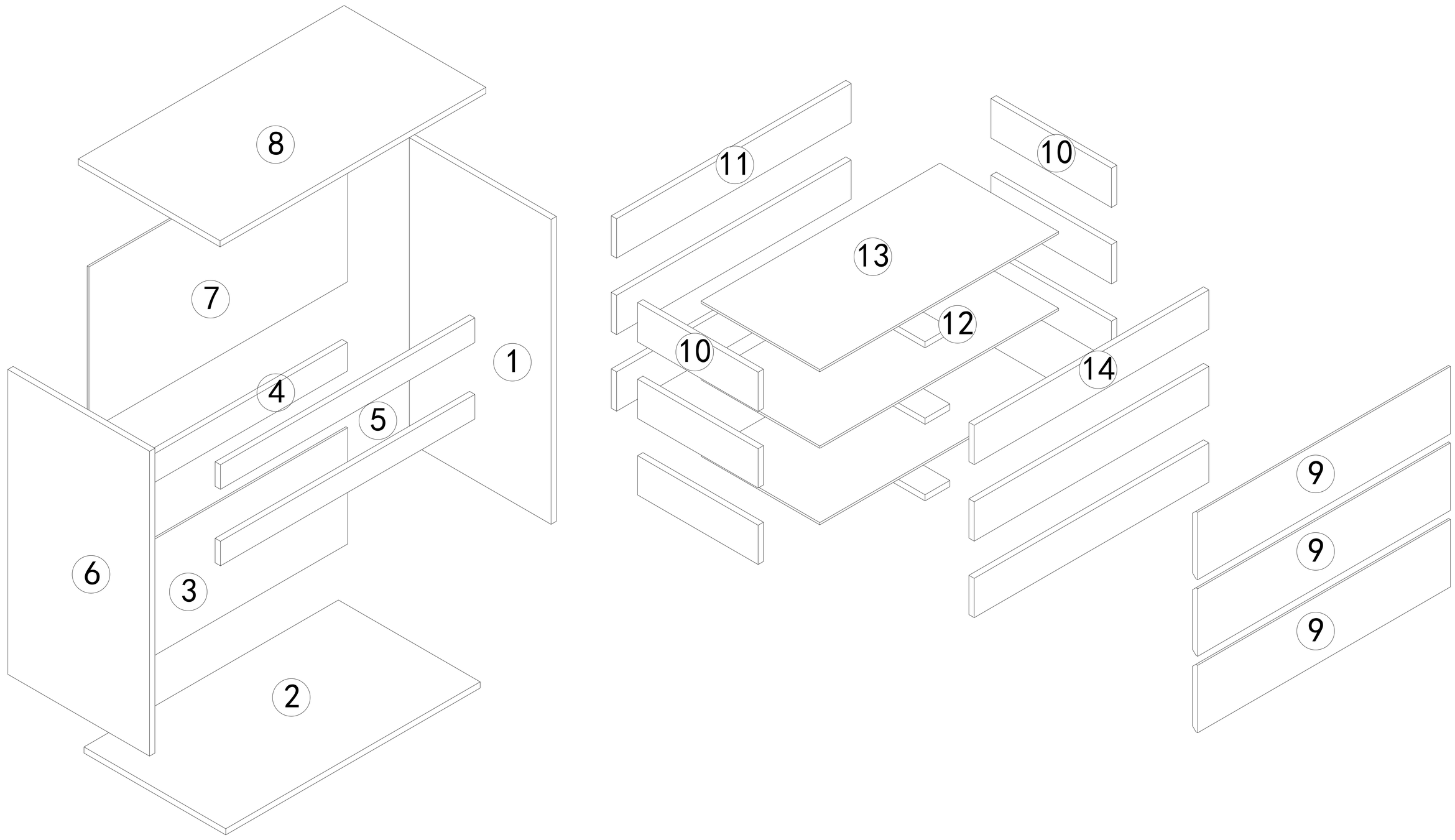

1 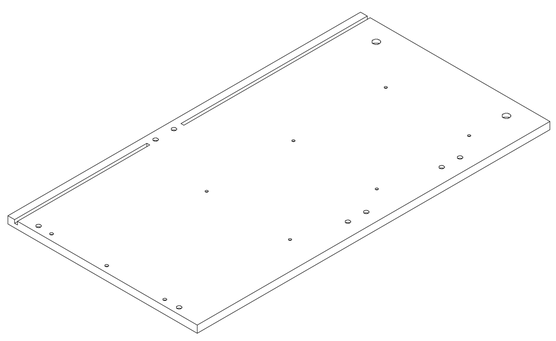 1PC	2 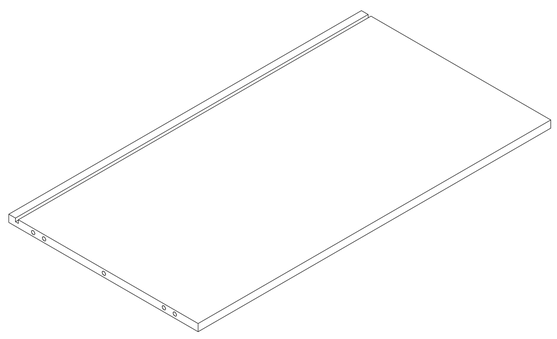 1PC	3 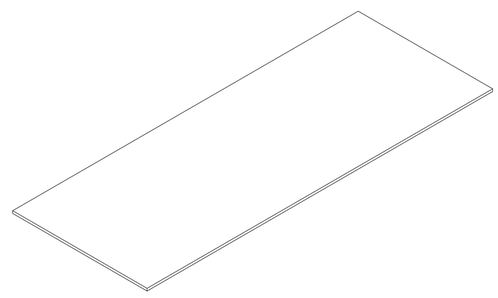 1PC	4 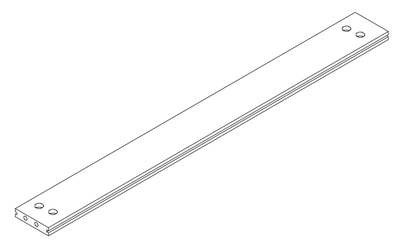 1PC
5 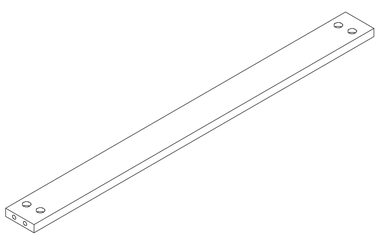 2PCS	6 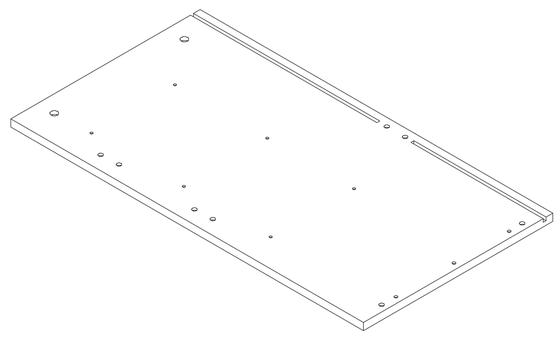 1PC	7 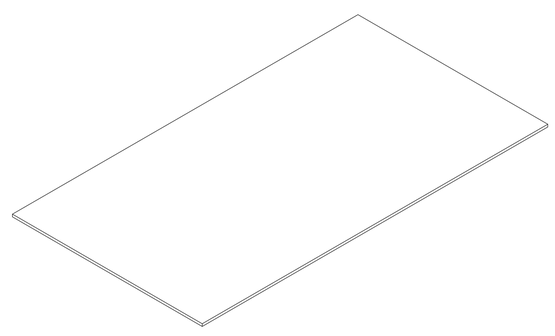 1PC	8 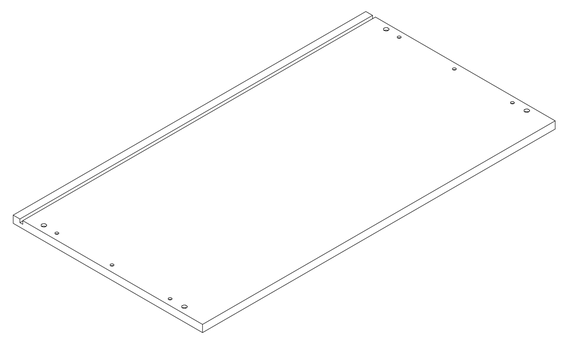 1PC
9 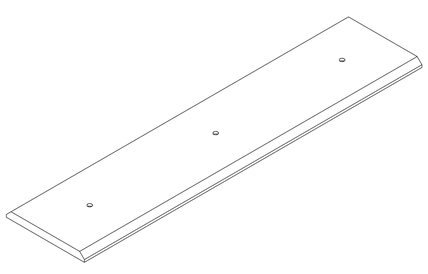 3PCS	10 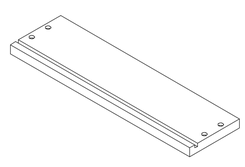 6PCS	11 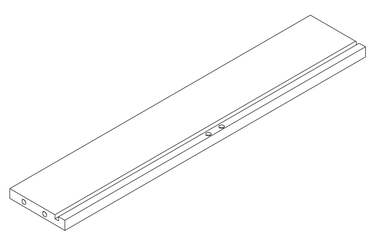 3PCS	12 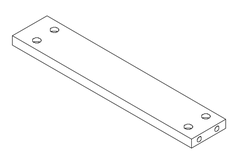 3PCS
13 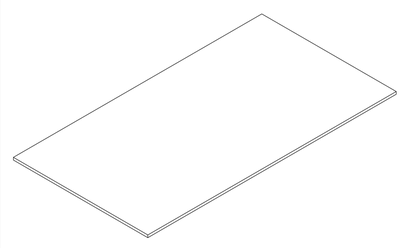 3PCS	14 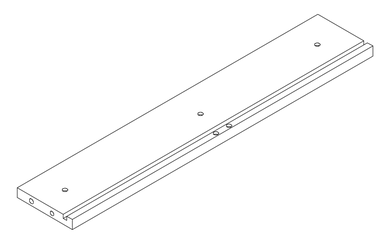 3PCS		

STEP 1

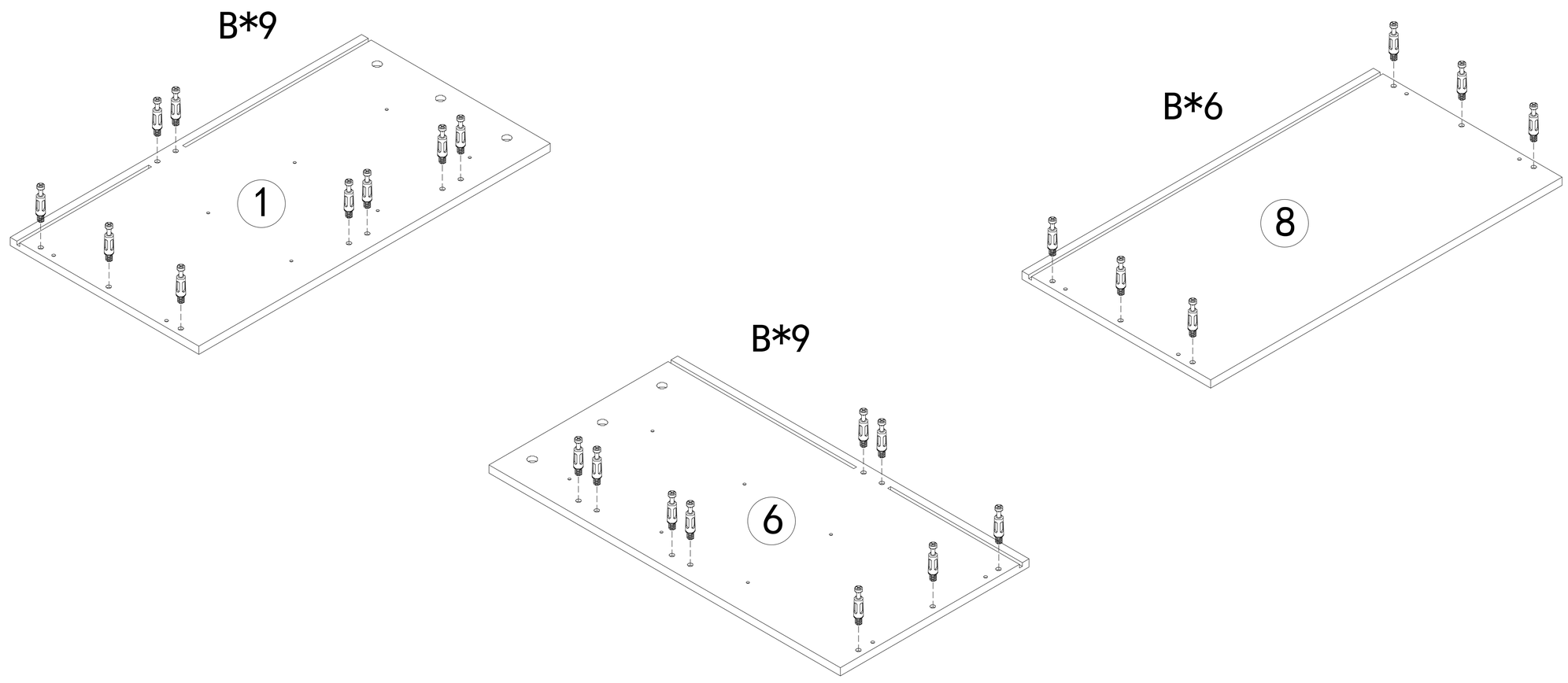

B	24PCS
ϕ 6*28mm	

STEP 2

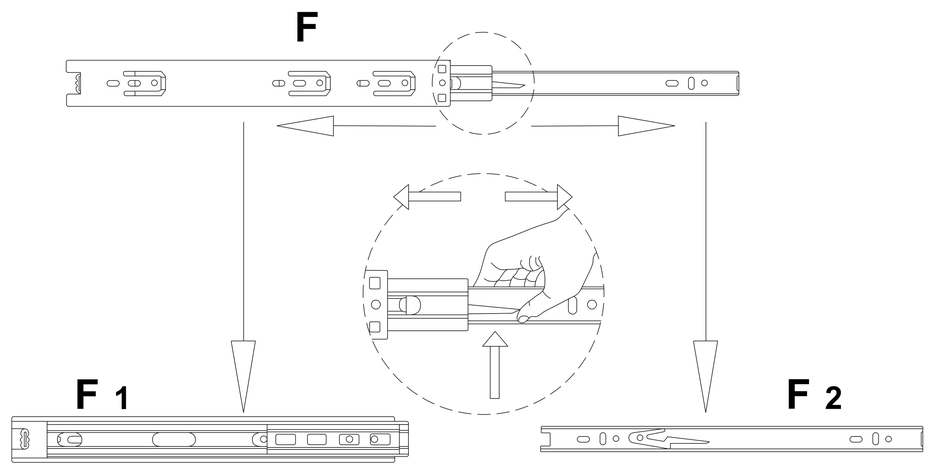

The disassembly method of the guide rail.

For the guide rail F1, align it with the hole positions, use screw D and tighten the screw.

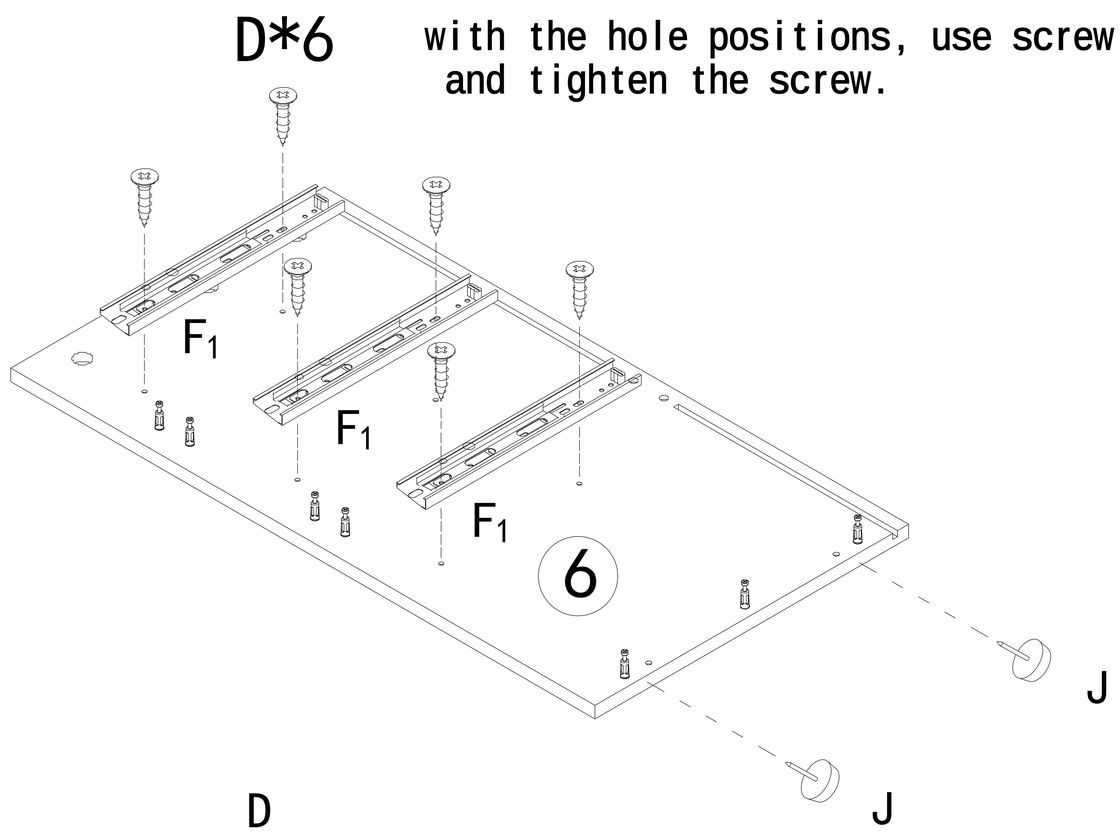

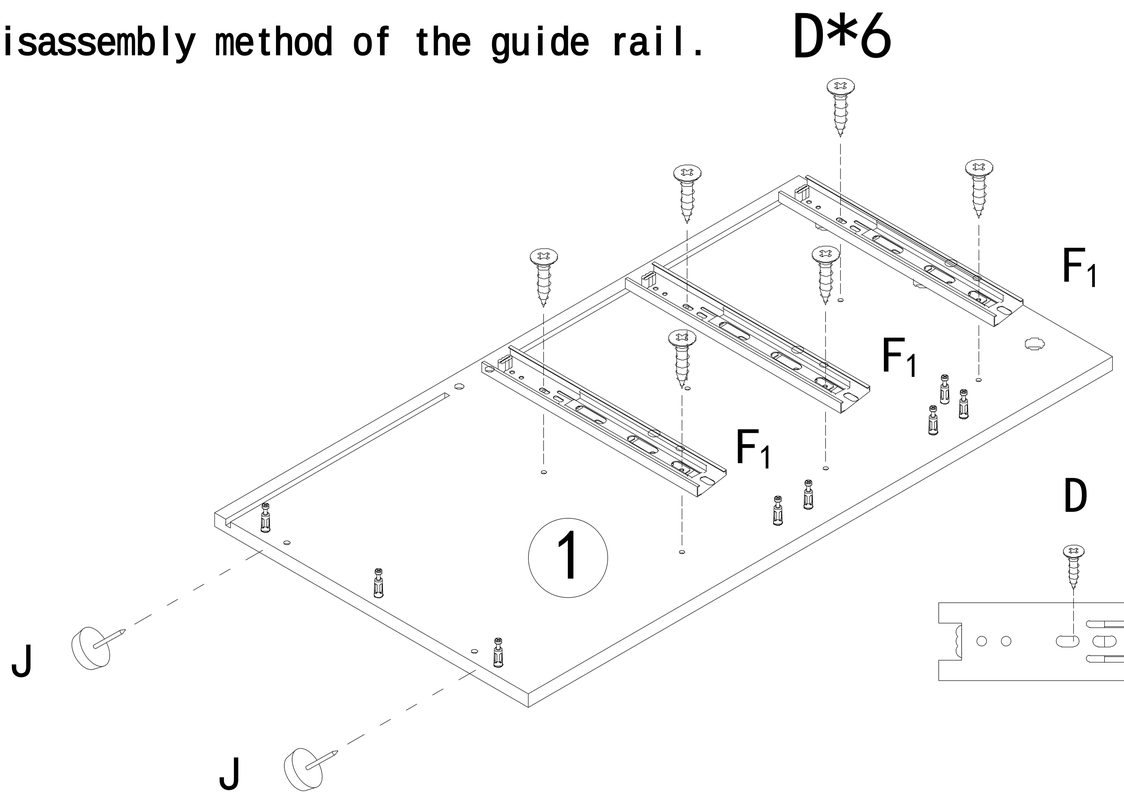

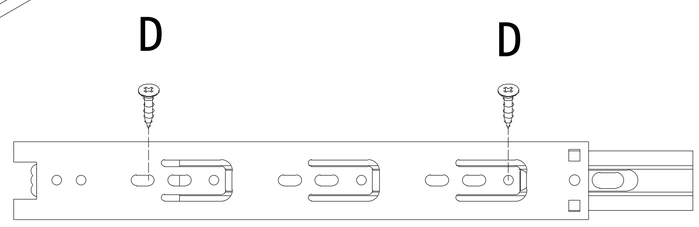

F1 * 6

F1	6PCS

D	12PCS
ϕ3.5*14mm	

J	4PCS

STEP 3

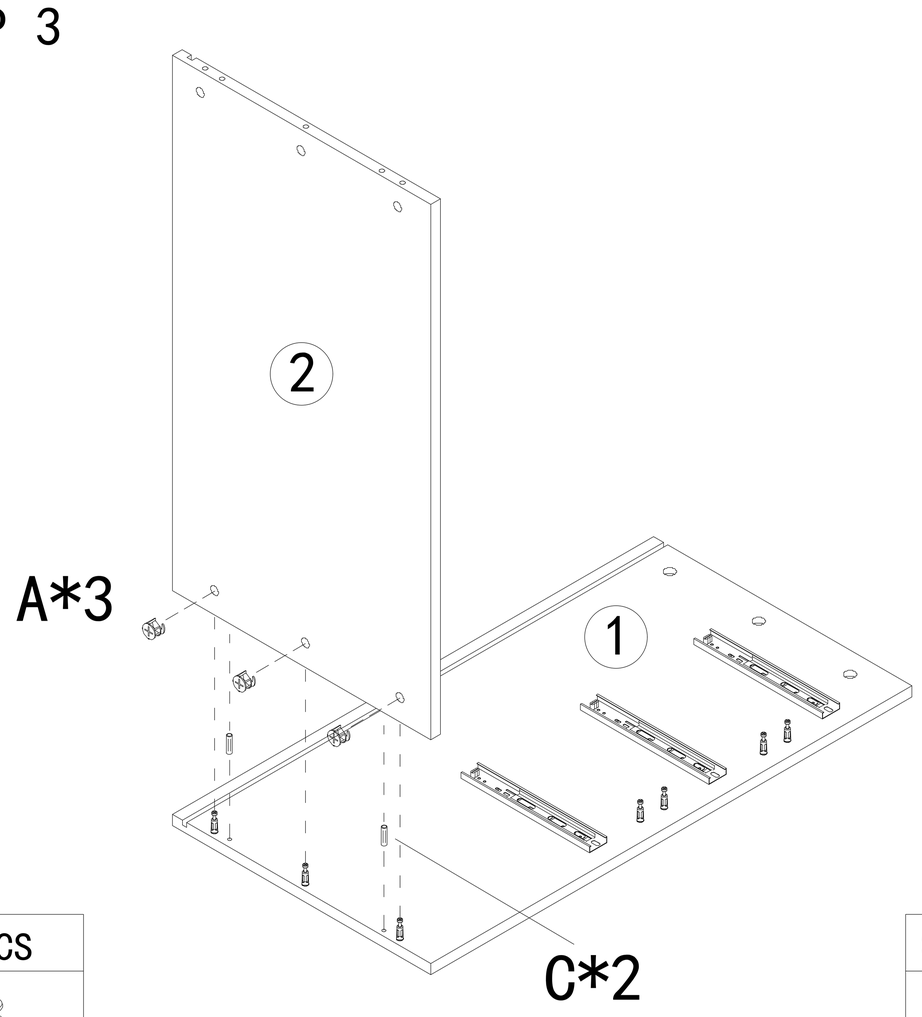

A	3PCS
ϕ12*10mm	

C	2PCS
ϕ8*30mm	

STEP 4

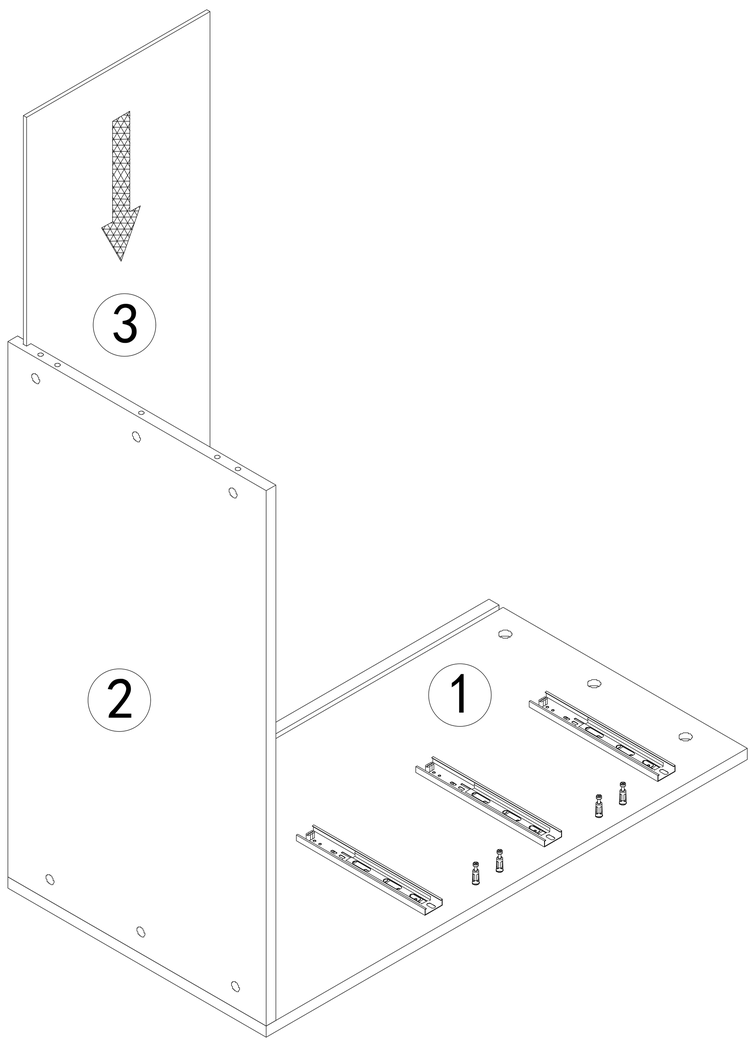

STEP 5

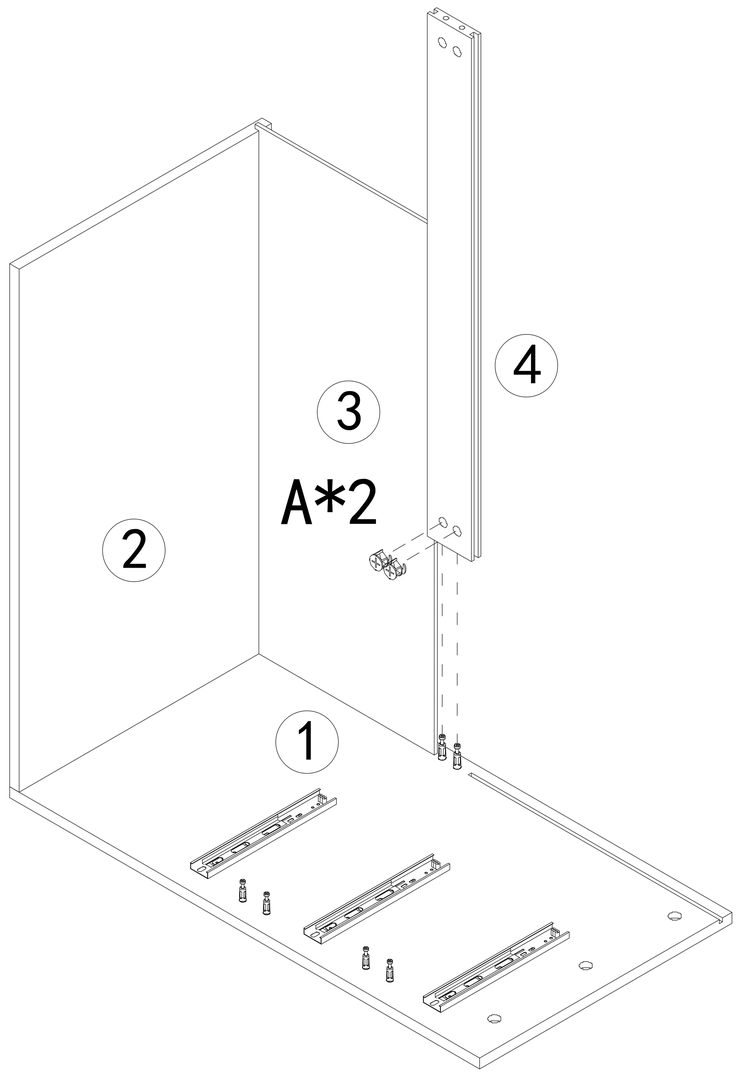

A	2PCS
ϕ12*10mm	

STEP 6

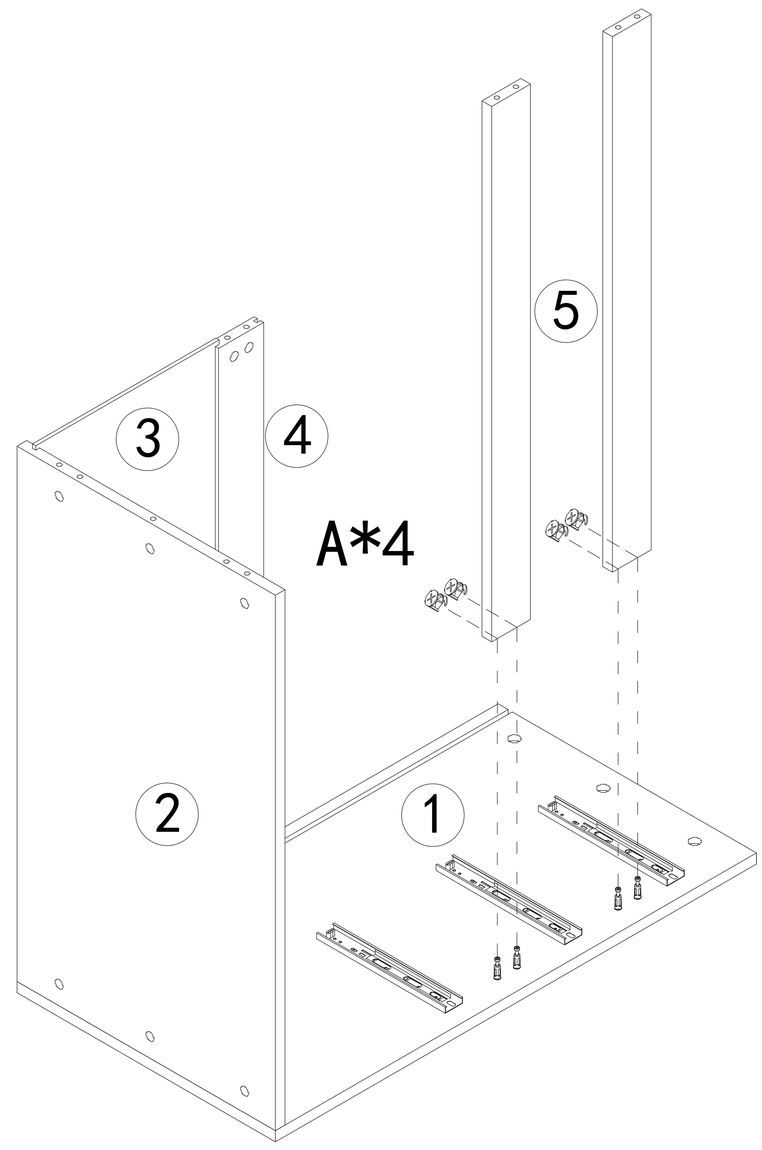

A	4PCS
ϕ12*10mm	

STEP 7

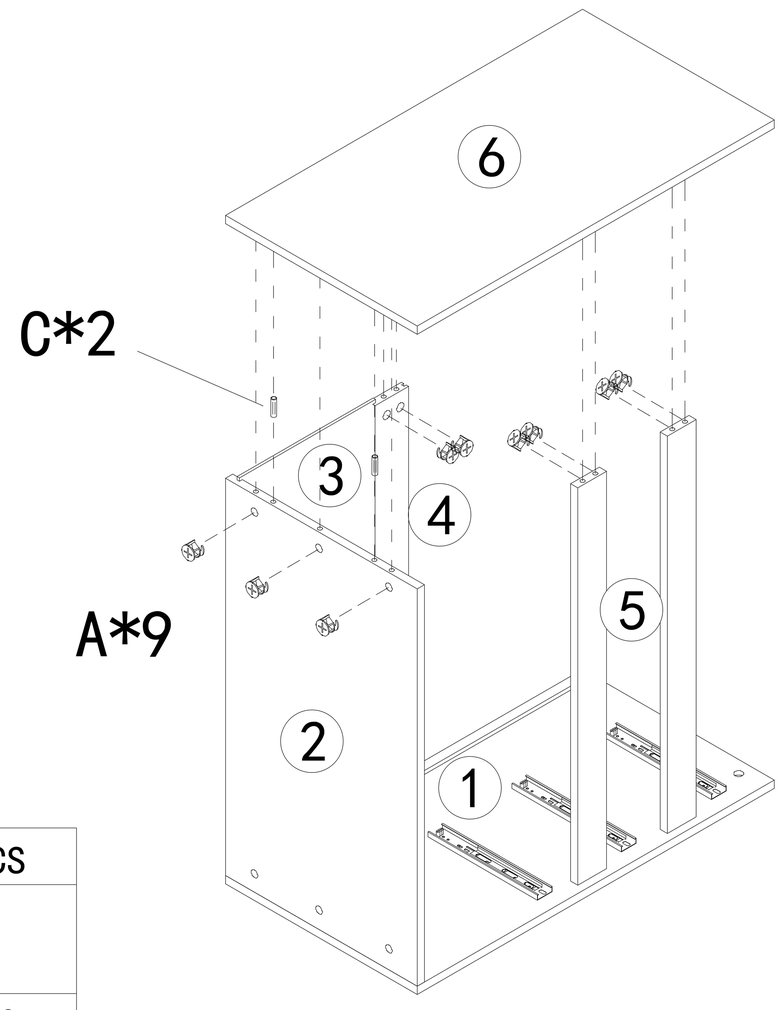

A	9PCS
ϕ12*10mm	

C	2PCS
ϕ8*30mm	

Turn over the cabinet body.

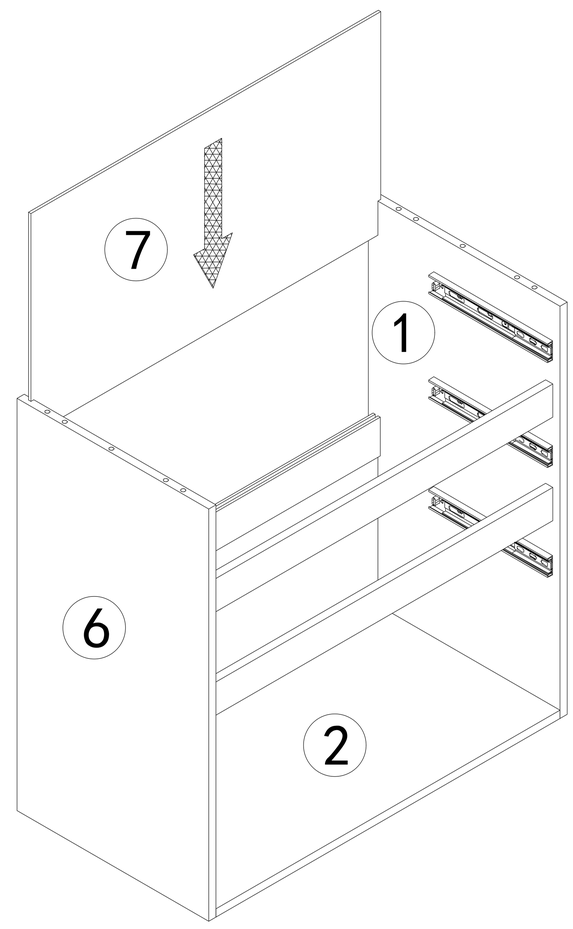

STEP 9

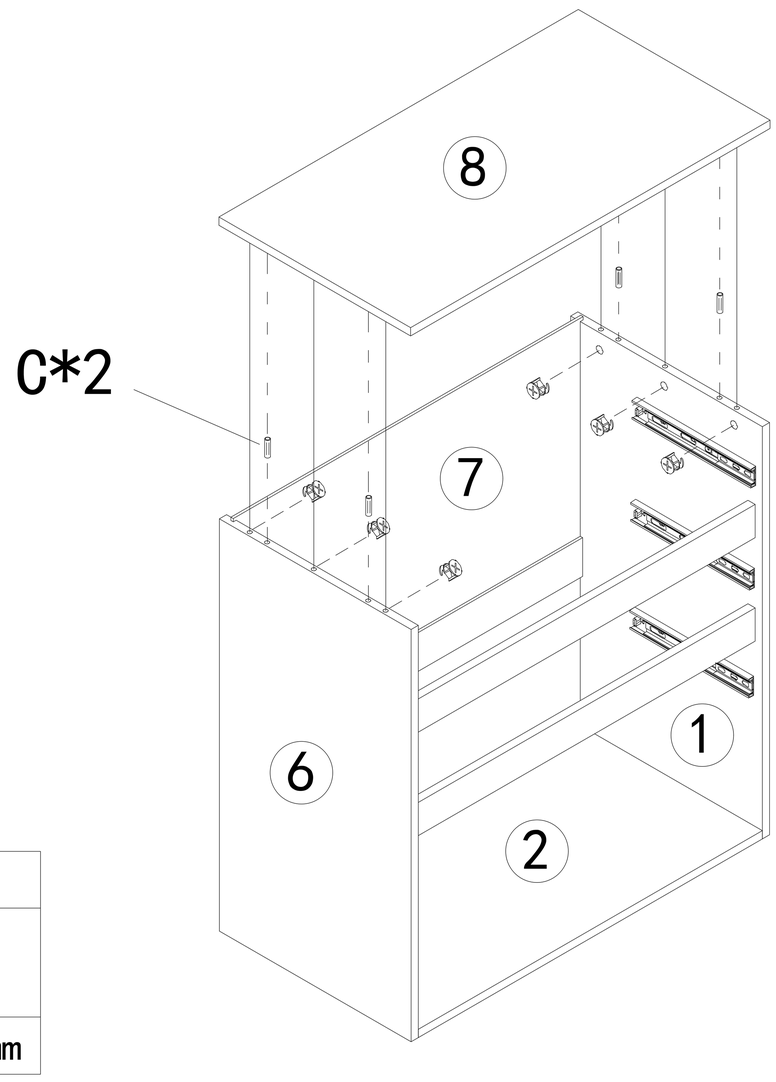

A	6PCS
ϕ12*10mm	

C	4PCS
ϕ8*30mm	

STEP 10

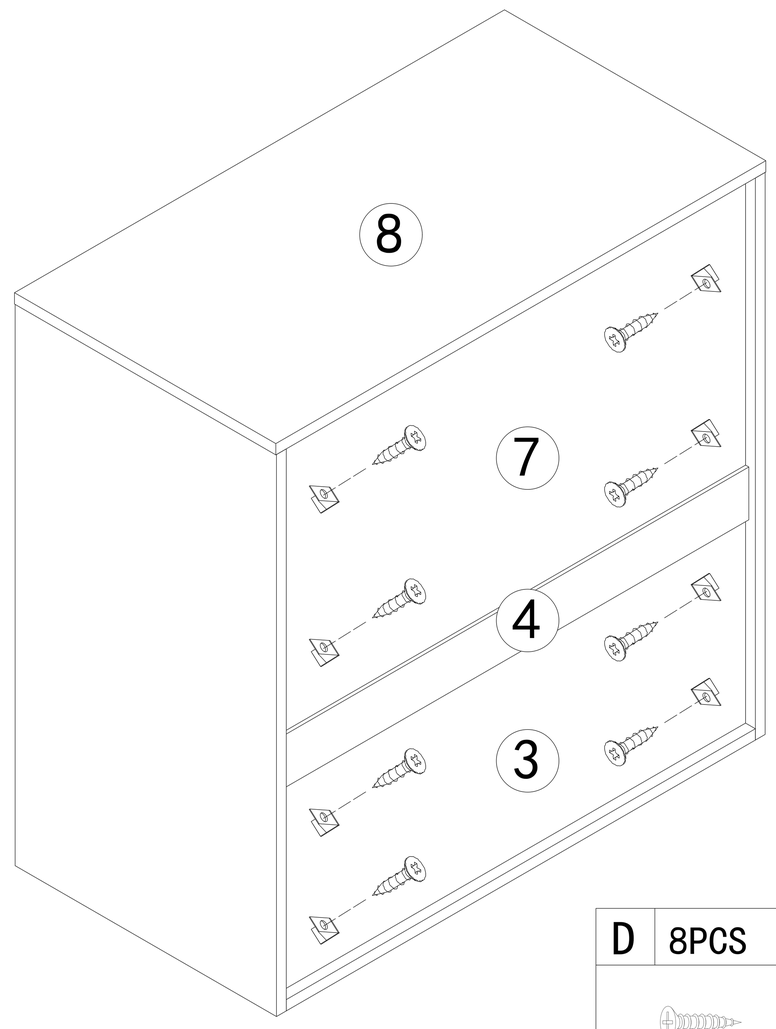

D	8PCS
ϕ3.5*14mm	

G	8PCS

STEP 11

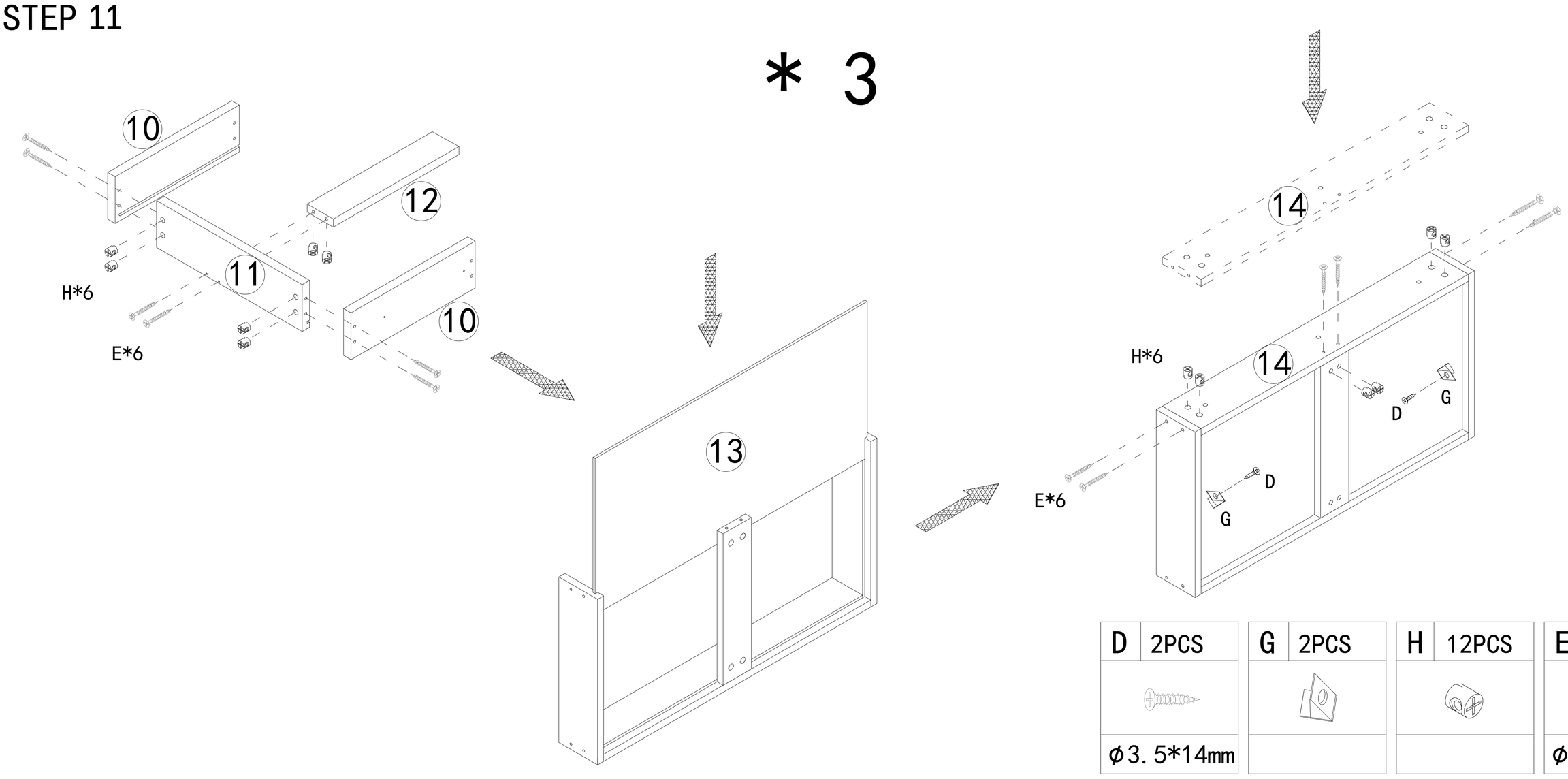

D	2PCS	G	2PCS	H	12PCS	E	12PCS
ϕ3.5*14mm						ϕ3.5*35mm	

STEP 12

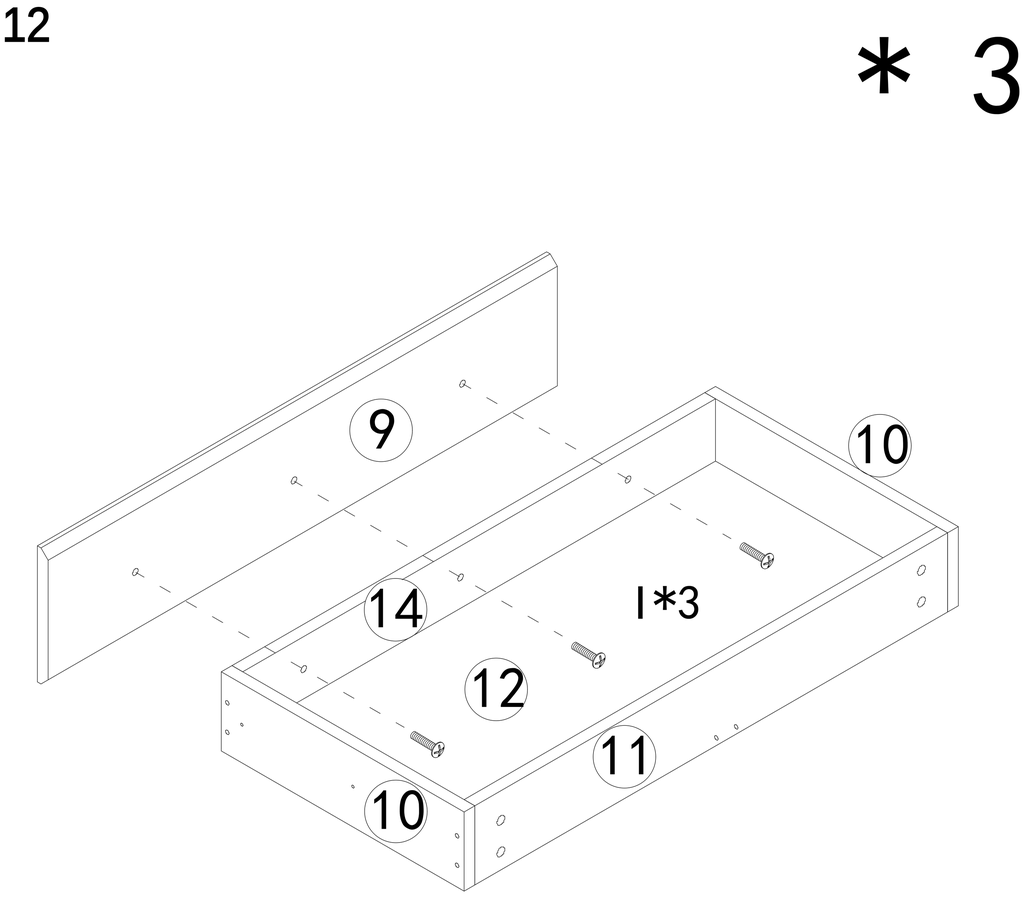

I	3PCS
ϕ6*25mm	

STEP 13

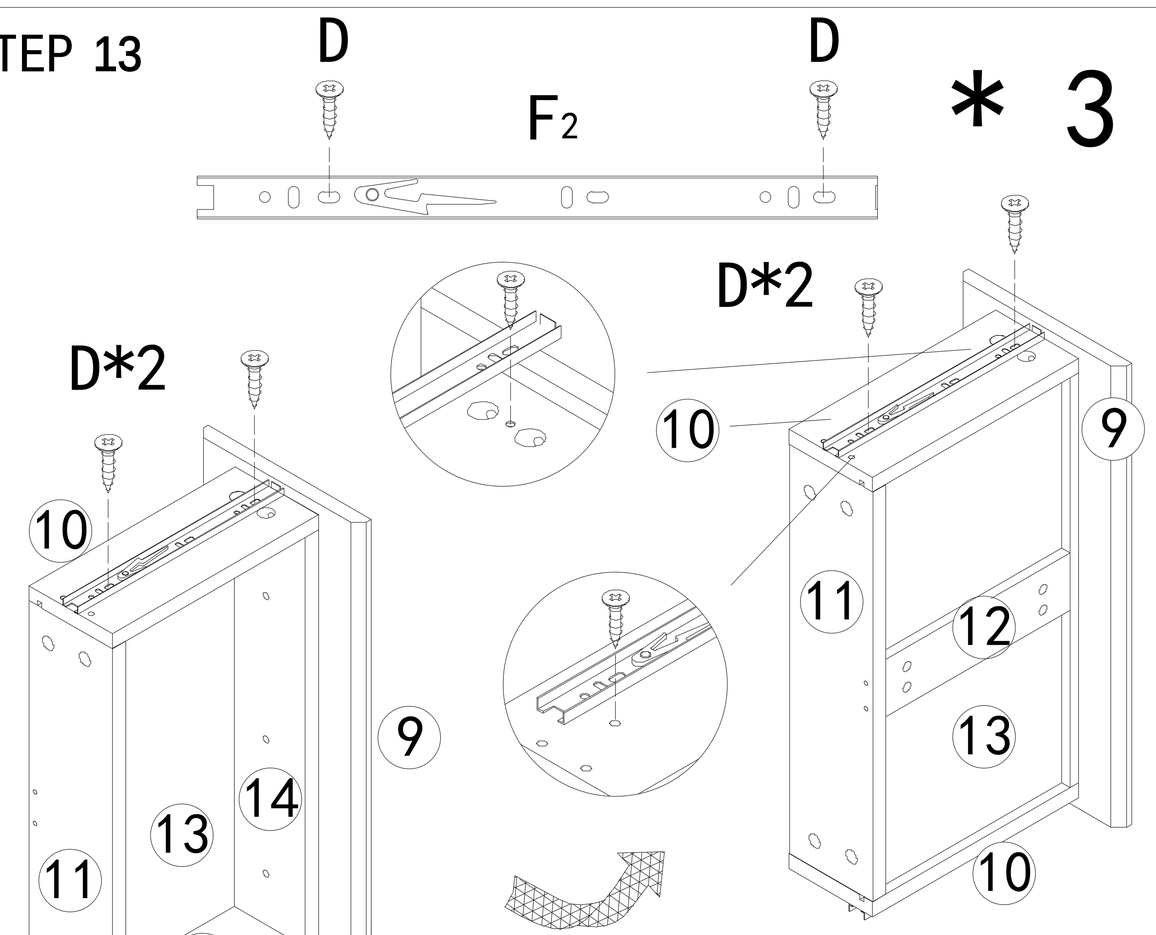

F_2	2PCS	D	4PCS
		ϕ3.5*14mm	

STEP 14

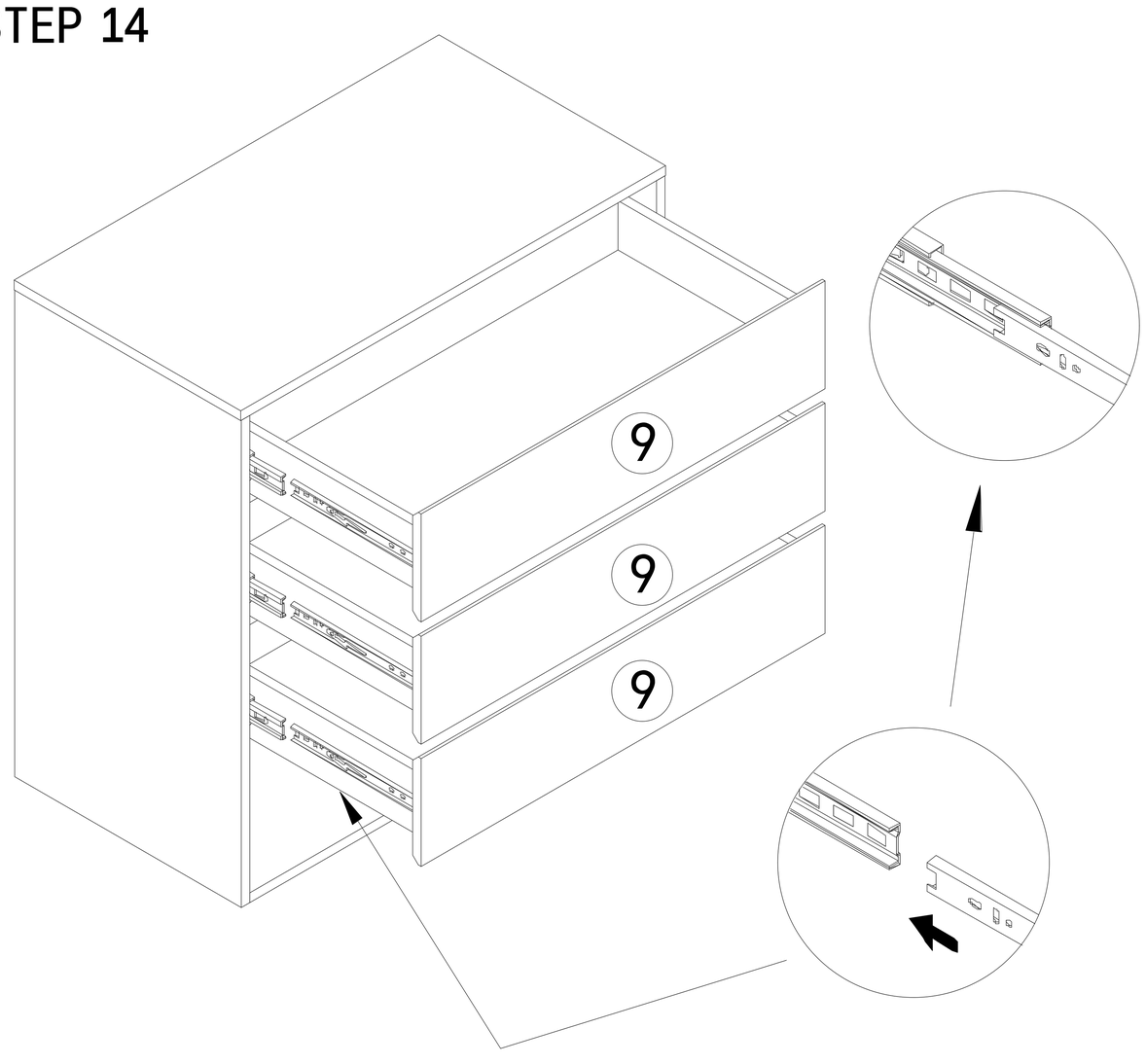

STEP 15

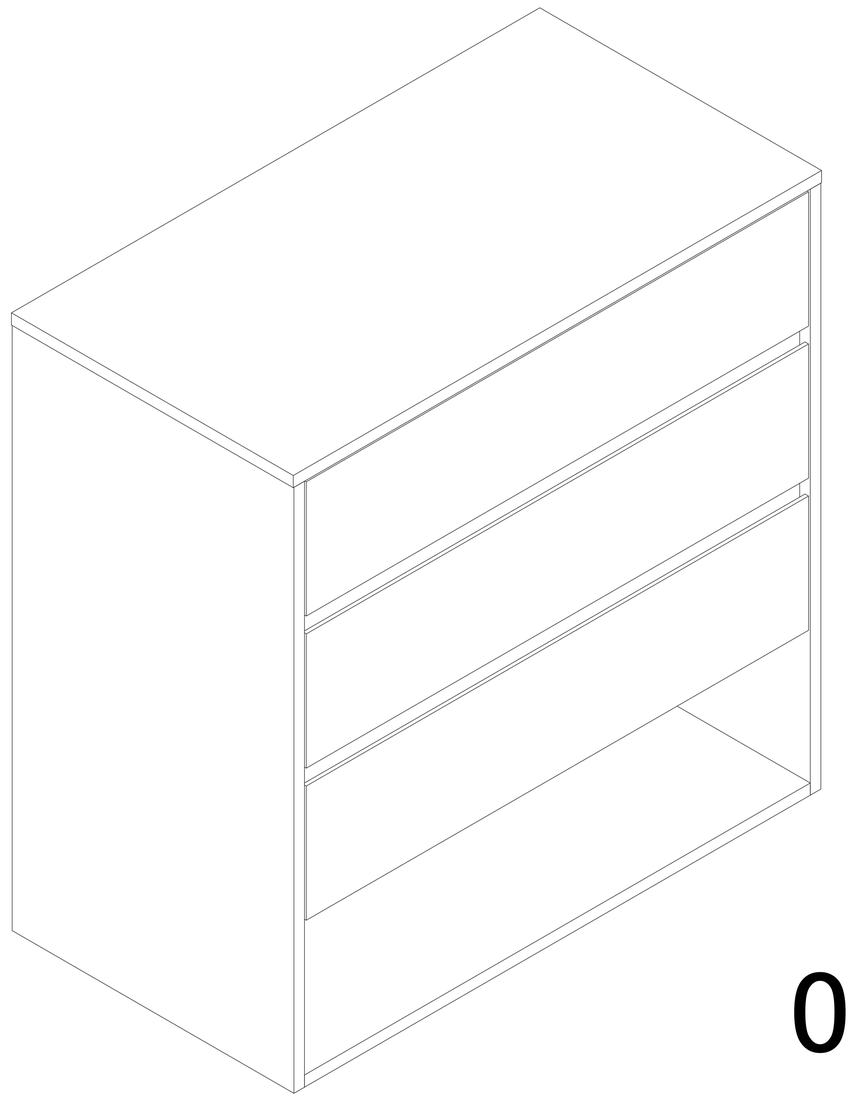

OK