Important Pre-Assembly Instructions

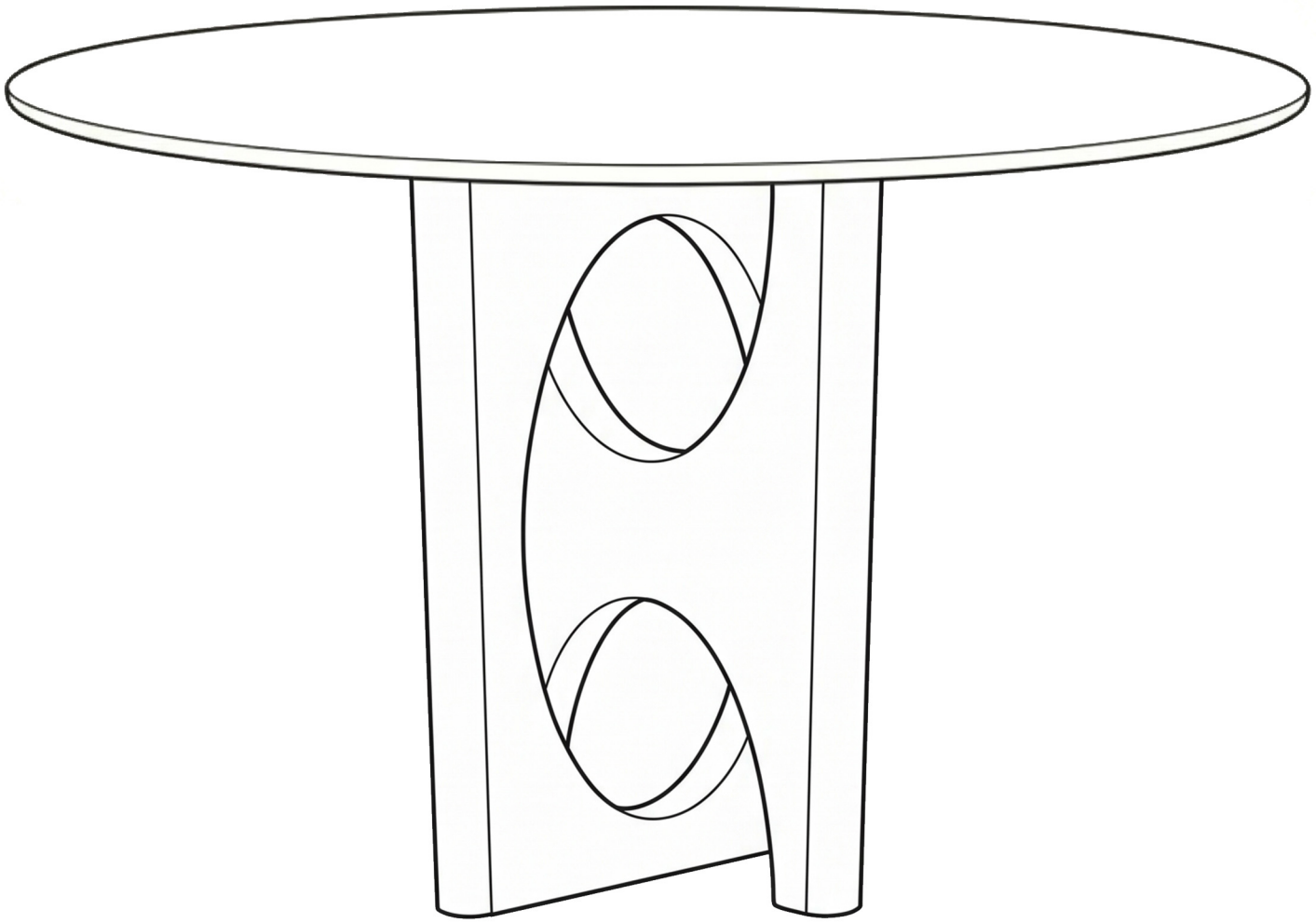

1. Read this entire manual thoroughly before assembly and strictly follow all installation steps.
2. Check the outer carton for dents, cracks or impact damage right after receiving the goods.
3. If the packaging is intact, unpack all parts and confirm every component and hardware is complete, scratch-free and undamaged.

2

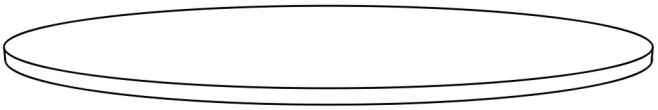

②Tabletop×1

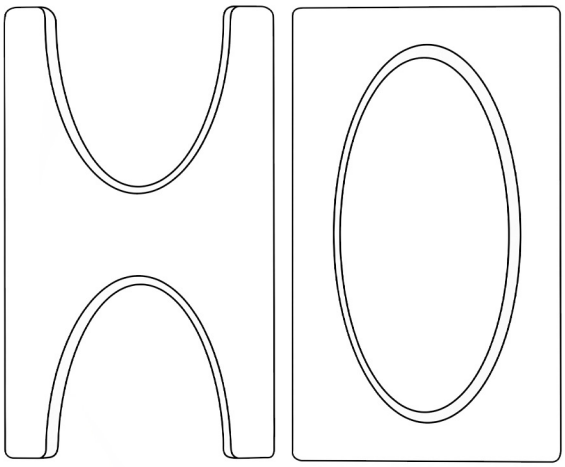

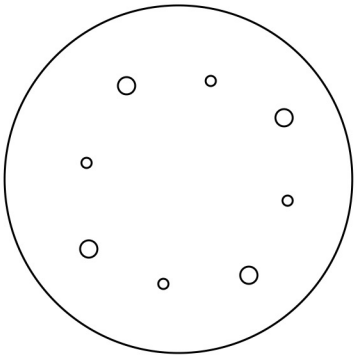

①Base×2

③Connecting plate×1

a ×1	b ×10	c ×10	d x5
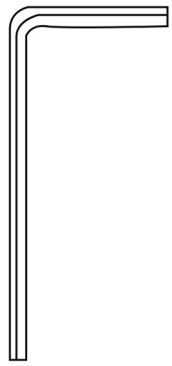	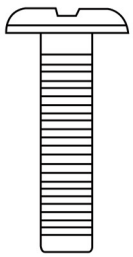	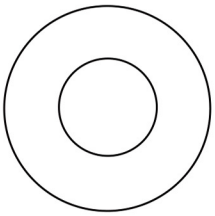	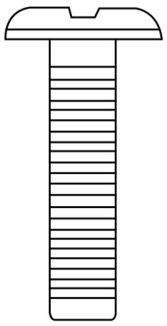
Hex screwdriver	Button-head socket cap screw	Screw washers	Button-head socket cap screw

Installation components

3

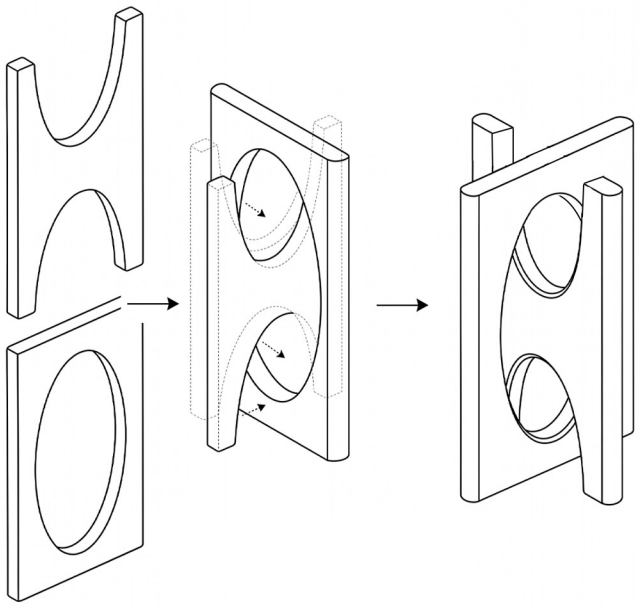

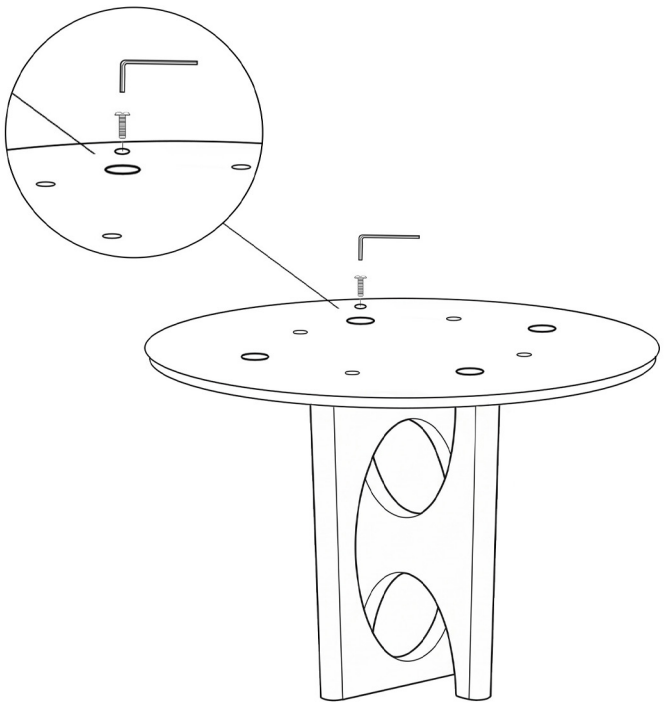

Fasten Mount Plate to Top of base

1. Assemble the two base panels together to form the complete base frame.
2. Place the Tabletop Mount Plate over the four threaded holes on the top of the base, all holesprecisely.
3. Fit one flat washer onto each screw, then hand-thread all screws through the tabletop into the mount plate.

IMPORTANT WARNING: Do not fully tighten any screw at this stage. Loosely fit all four screws first to avoid the plate shifting out of alignment.

4. After all four screws are loosely fixed, tighten them evenly and fully with the Hex Allen Wrench.

4

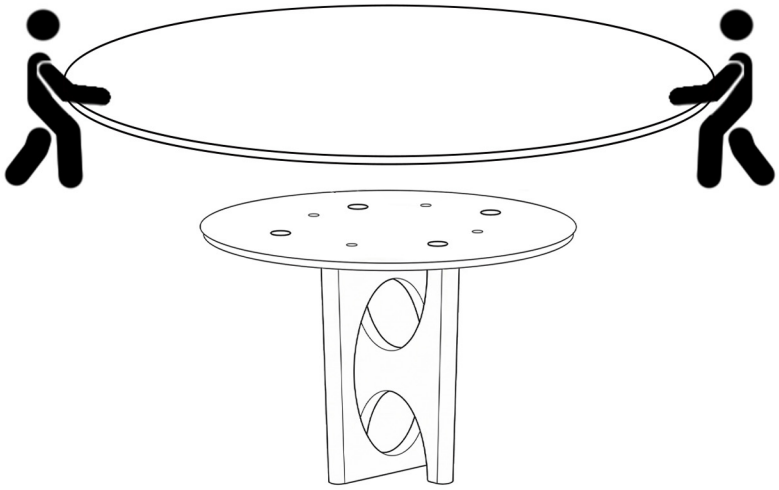

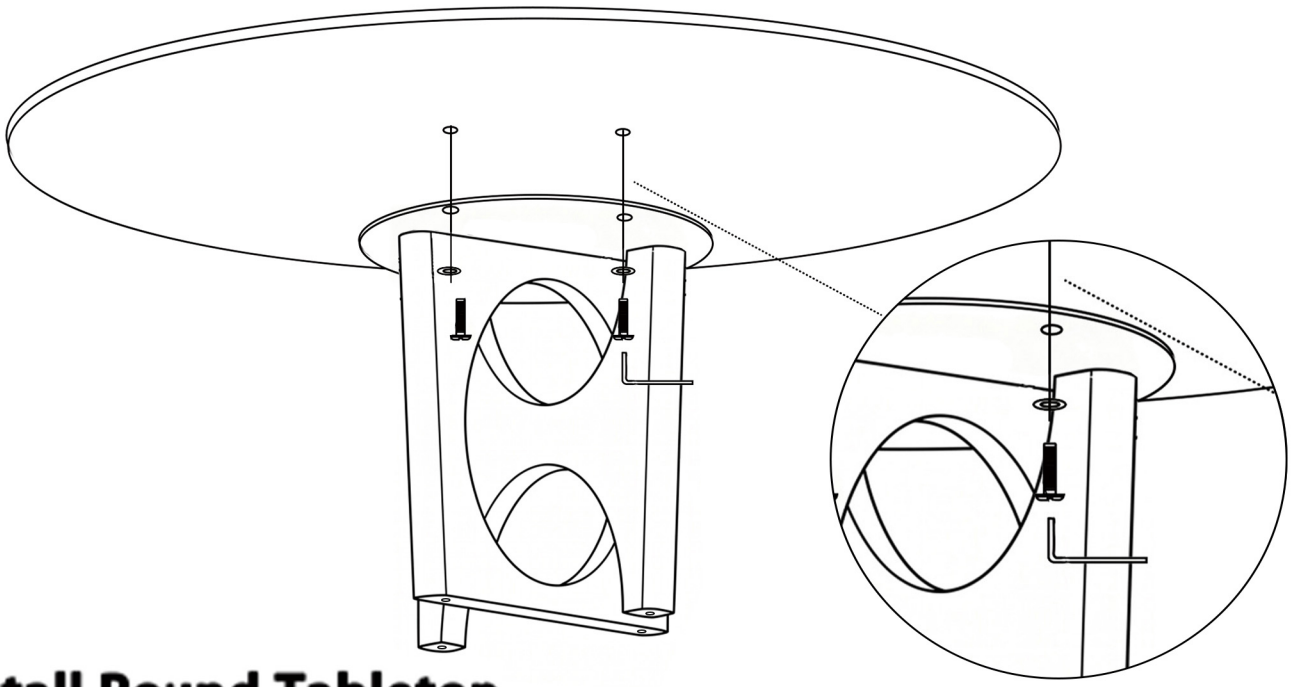

Install Round Tabletop

SAFETY REMINDER: The tabletop is heavy. Two people are required to lift and position it, do not install alone.

1. With another person's help, lift the round tabletop and lay it evenly on the pre-assembled base.
2. Match the threaded holes on the tabletop's underside to the holes of the Tabletop Mount Plate.
3. Fit one flat washer onto each screw, then hand-thread all screws through the tabletop into the mount plate.
4. After all screws are loosely fitted, tighten each screw evenly one at a time with the Hex Allen Wrench to prevent an uneven table surface.

5

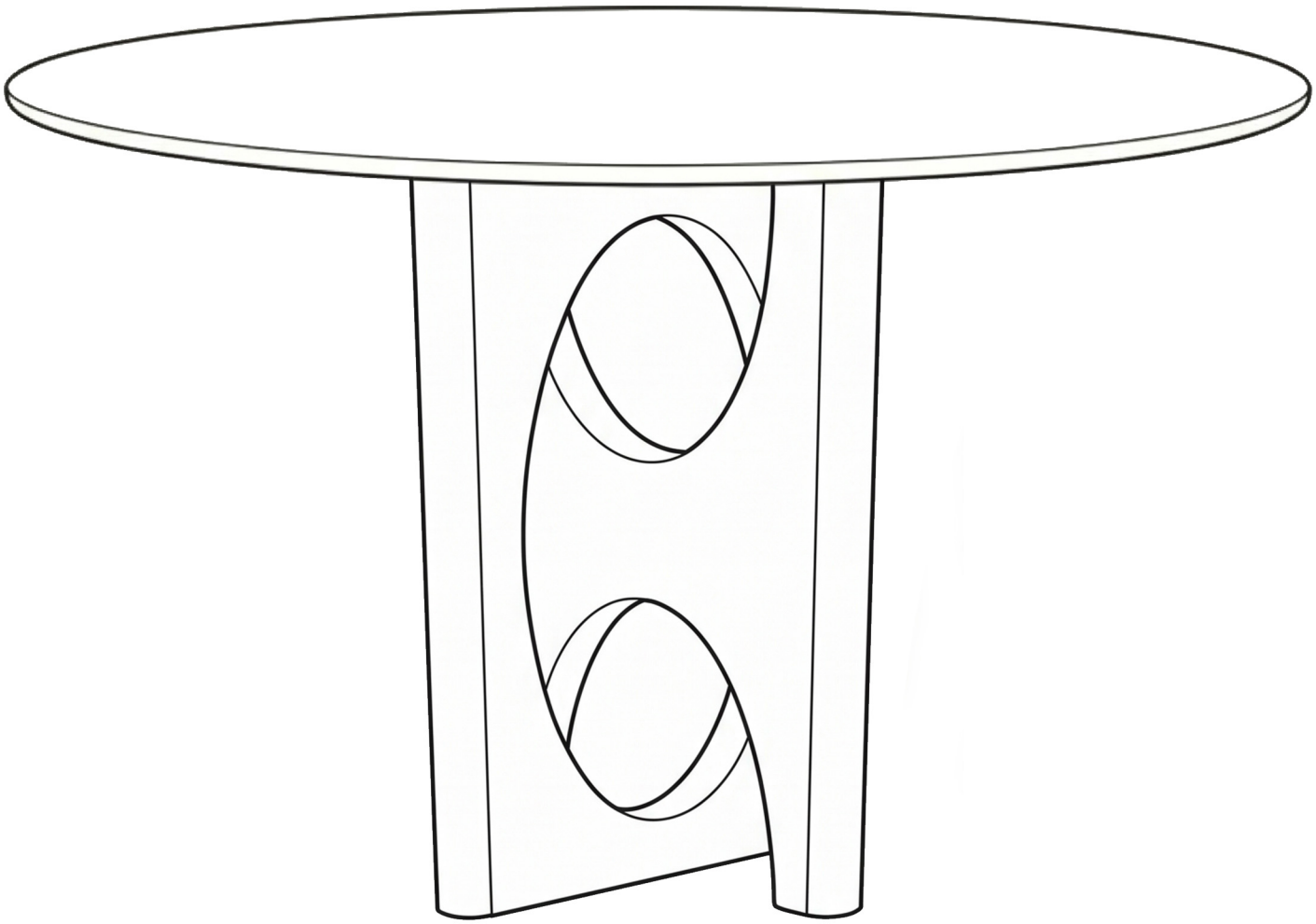

Assembly Completed

1. Recheck all screws on the mount plate and tabletop to confirm all are fully tightened.
2. Shake the table gently from all sides to test stability; there must be no wobble or abnormal rattling noise.