Assembly Instruction

Storage ottoman Assembly

Step 3

C*4
D*8
H*1

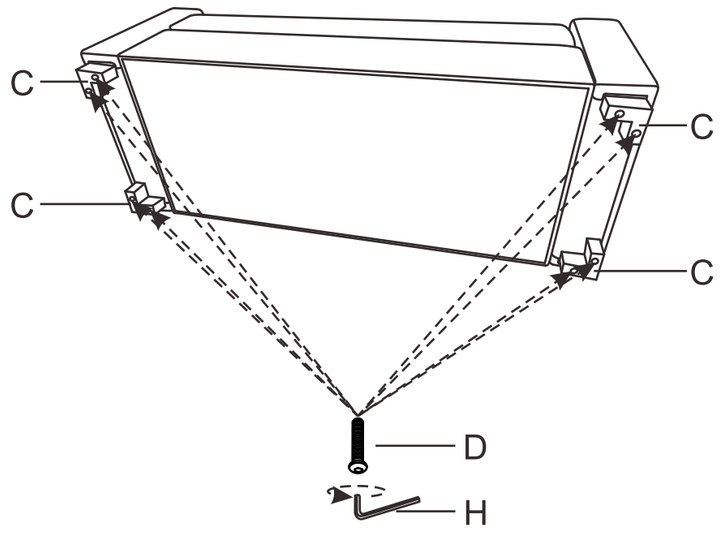

Tighten the screws to 100%

Step 4

F*4
G*4

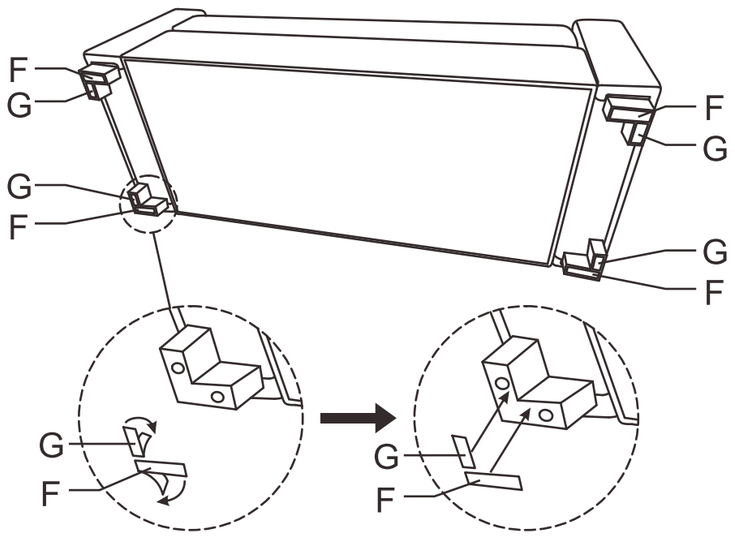

Storage Ottoman

ASSEMBLY INSTRUCTIONS

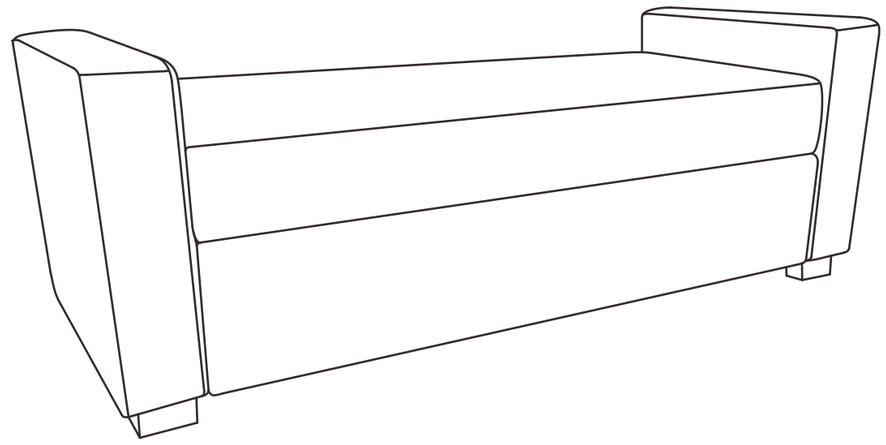

If you encounter any product-related issues, please feel free to contact us.

Assembly Instruction

Parts List

A	B	C	D
	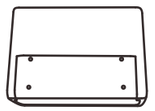		 M6*50
1PC	2PCS	4PCS	16PCS
E	**F**	**G**	**H**
	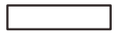 60*20	 40*20	
8PCS	4PCS	4PCS	1PC

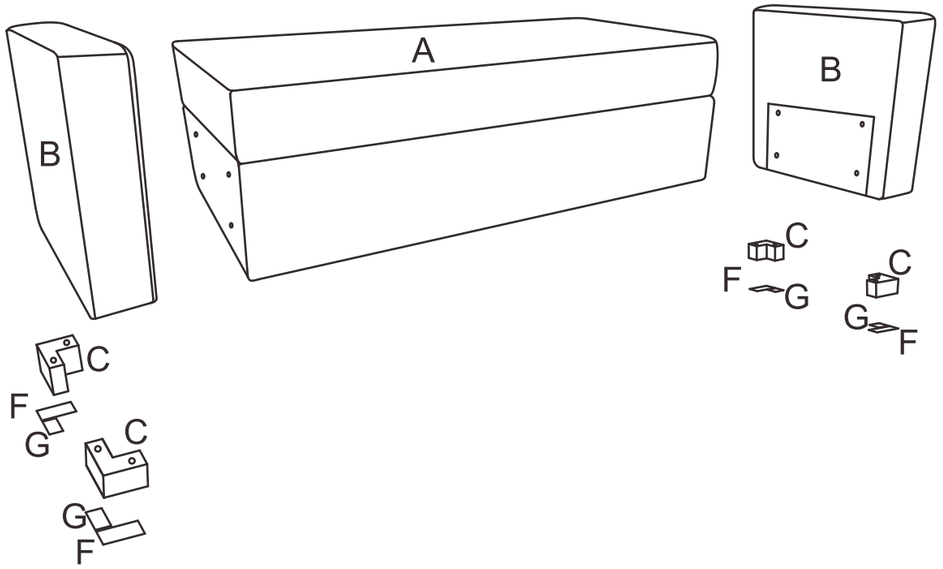

Assembly Instruction

Storage ottoman Assembly

Step 1

A*1
B*1
D*4
E*4
H*1

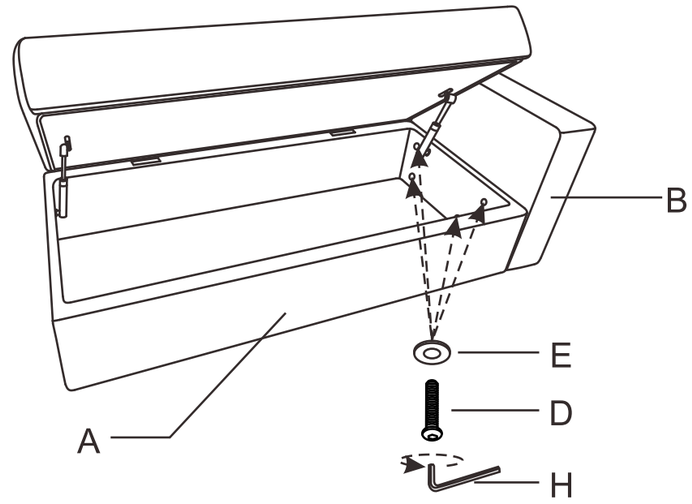

Tighten the screws to 80%

Step 2

A*1
B*1
D*4
E*4
H*1

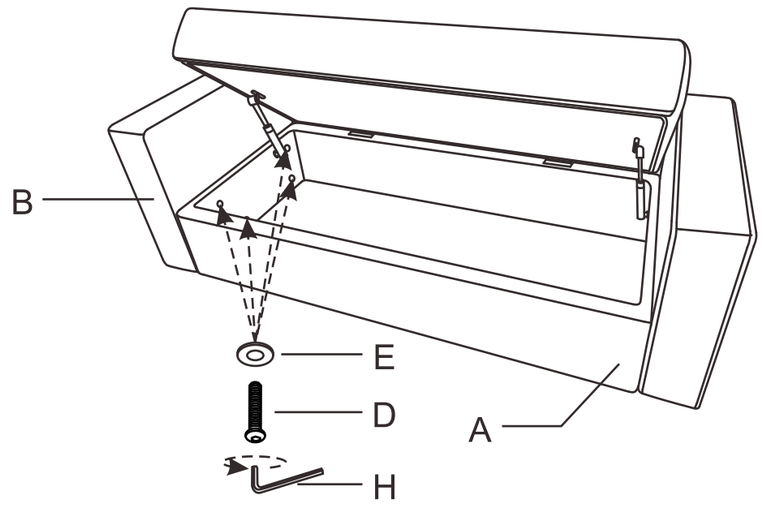

Tighten all the screws to 100%