FSC
www.fsc.org
100%
Wood from well-managed forests
FSC® C183324

Power Left Chair
Assembly Manual

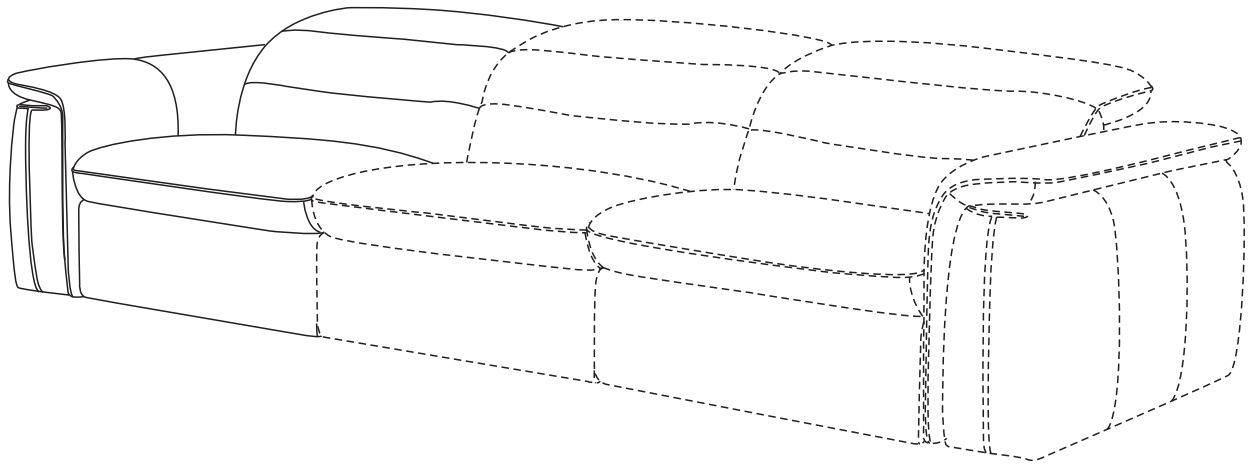

CAUTION THIS ASSEMBLY MANUAL CONTAINS IMPORTANT SAFETY INFORMATION. PLEASE READ AND KEEP FOR FUTURE REFERENCE.

Parts

A	B	C
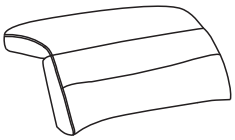 Backrest	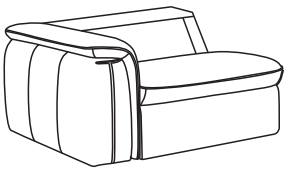 Power Left Chair	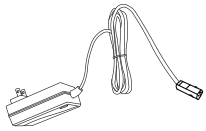 Power Cord

Before you begin

Locate both the Power Cord (C) at the bottom of the Power Left Chair Seat.

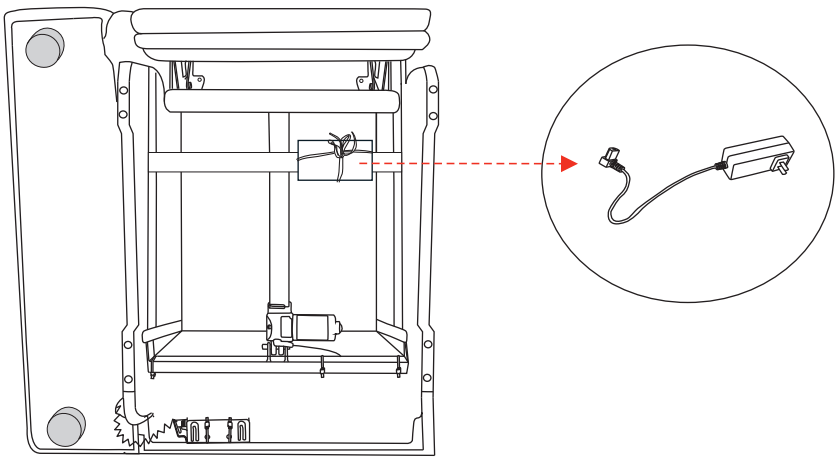

Step 1: Connect one end of the power cord into the DC adaptor located at the back corner of the seat. Plug the other end of power cord into the power outlet.

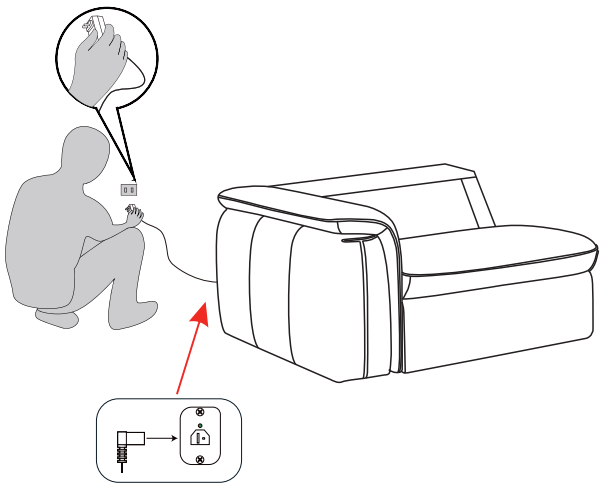

Step 2: Press the “Headrest open” button on the remote until the headrest hinge mechanism is fully upright.

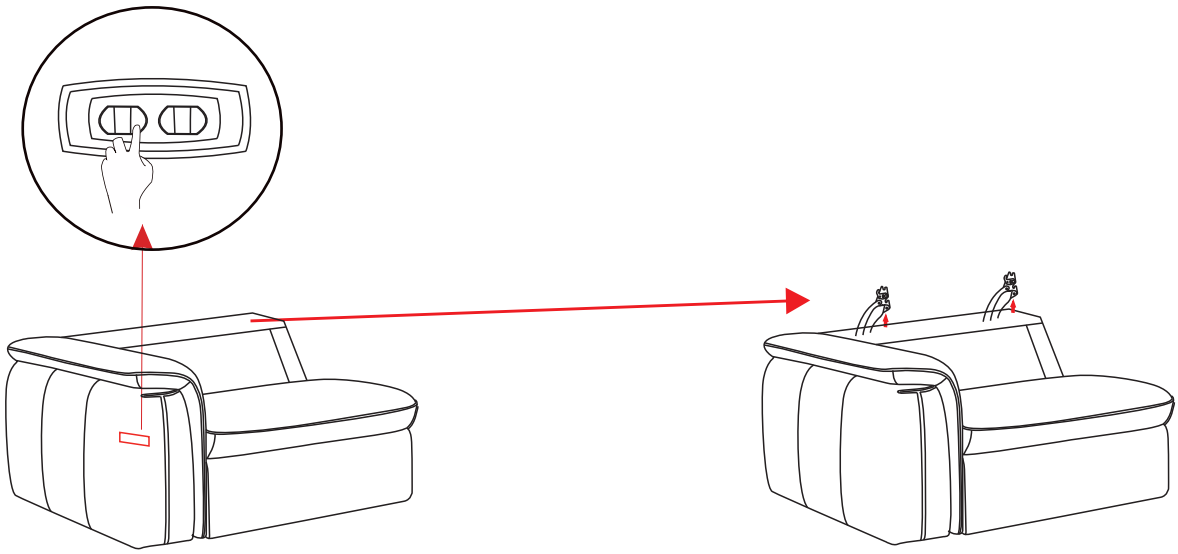

Step 3: Zip the backrest to the back frame.

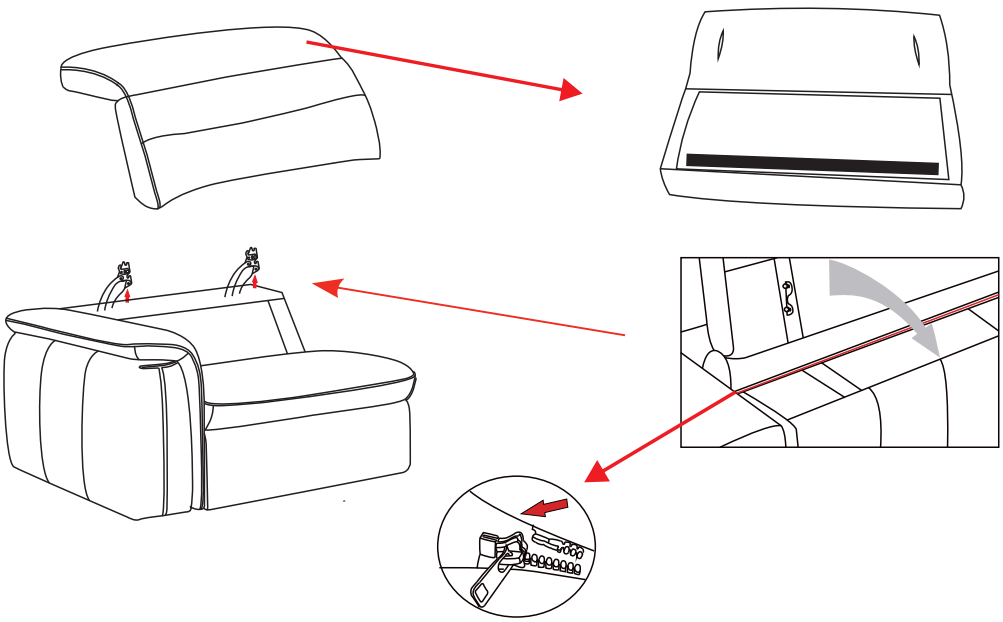

Step 4: As illustrated in the figure, snap the metal part of the headrest into the raised hinge and ensure it is firmly locked in place. Next, fasten the hook-and -loop strips (Velcro®-type) located underneath the back cushion to the corresponding strips on the seat base. Finally, activate the function and zip up the zipper between the backrest and the seat.

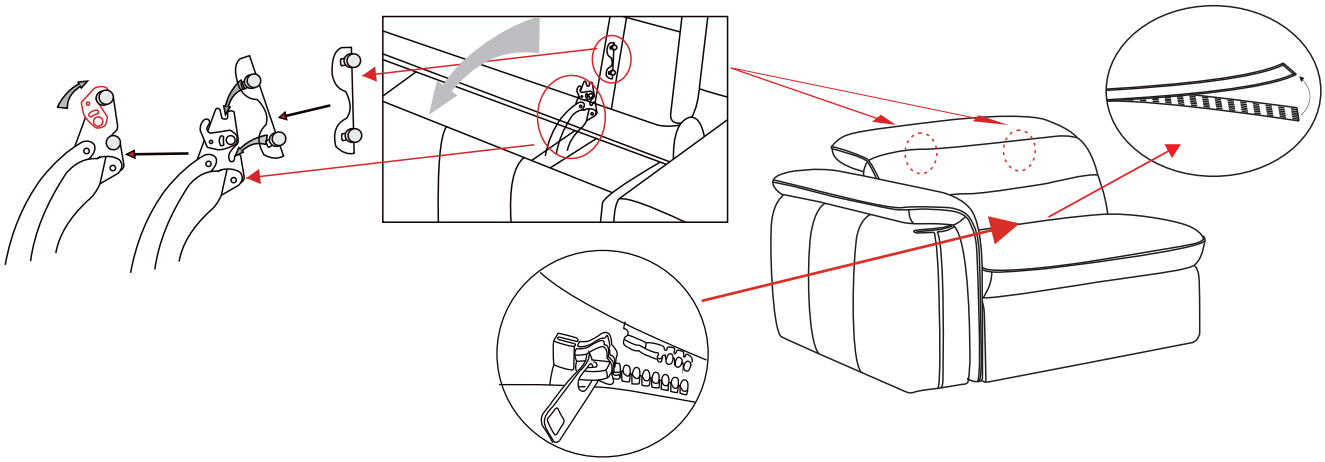

How to Connect

Step 1: Connect the wires piece by piece.

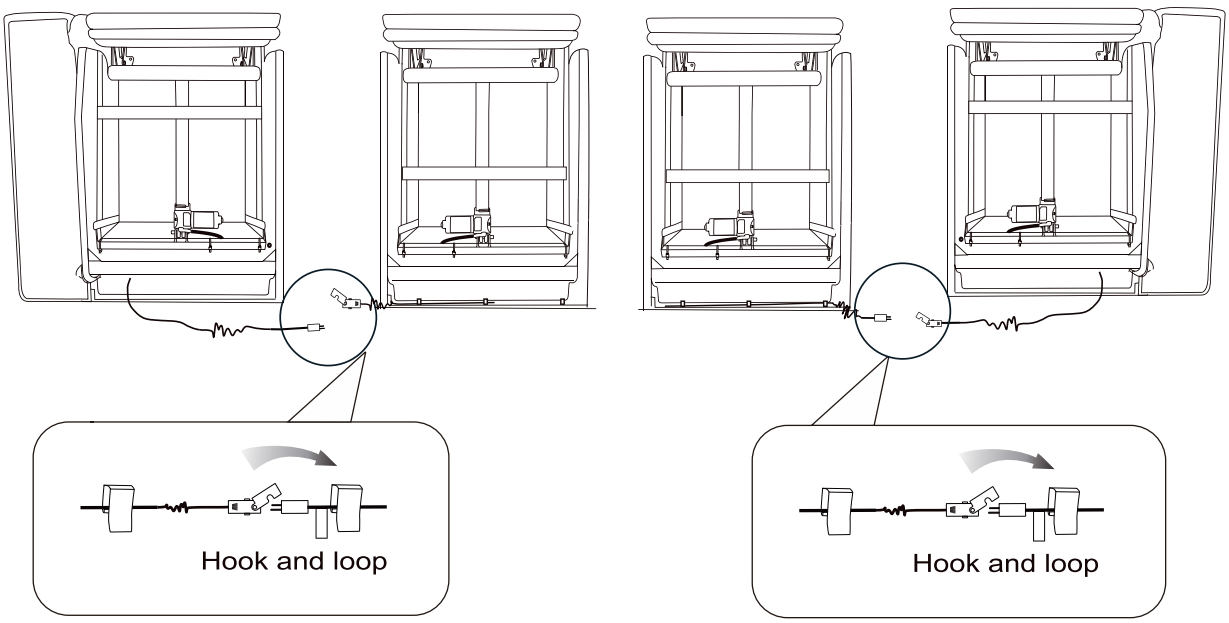
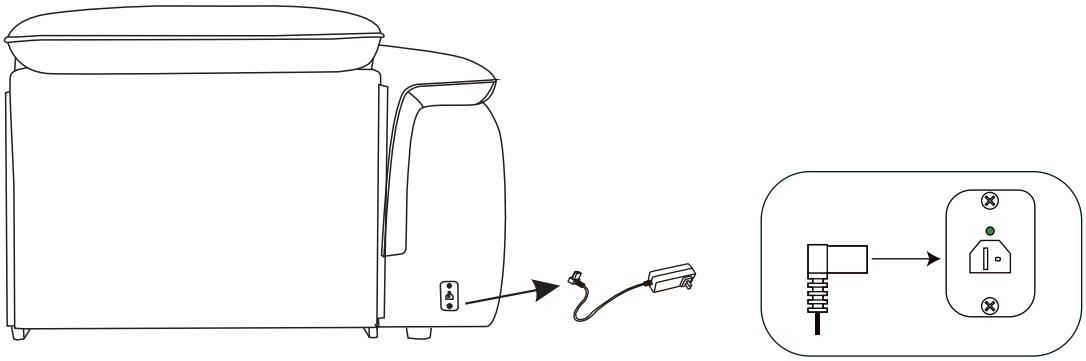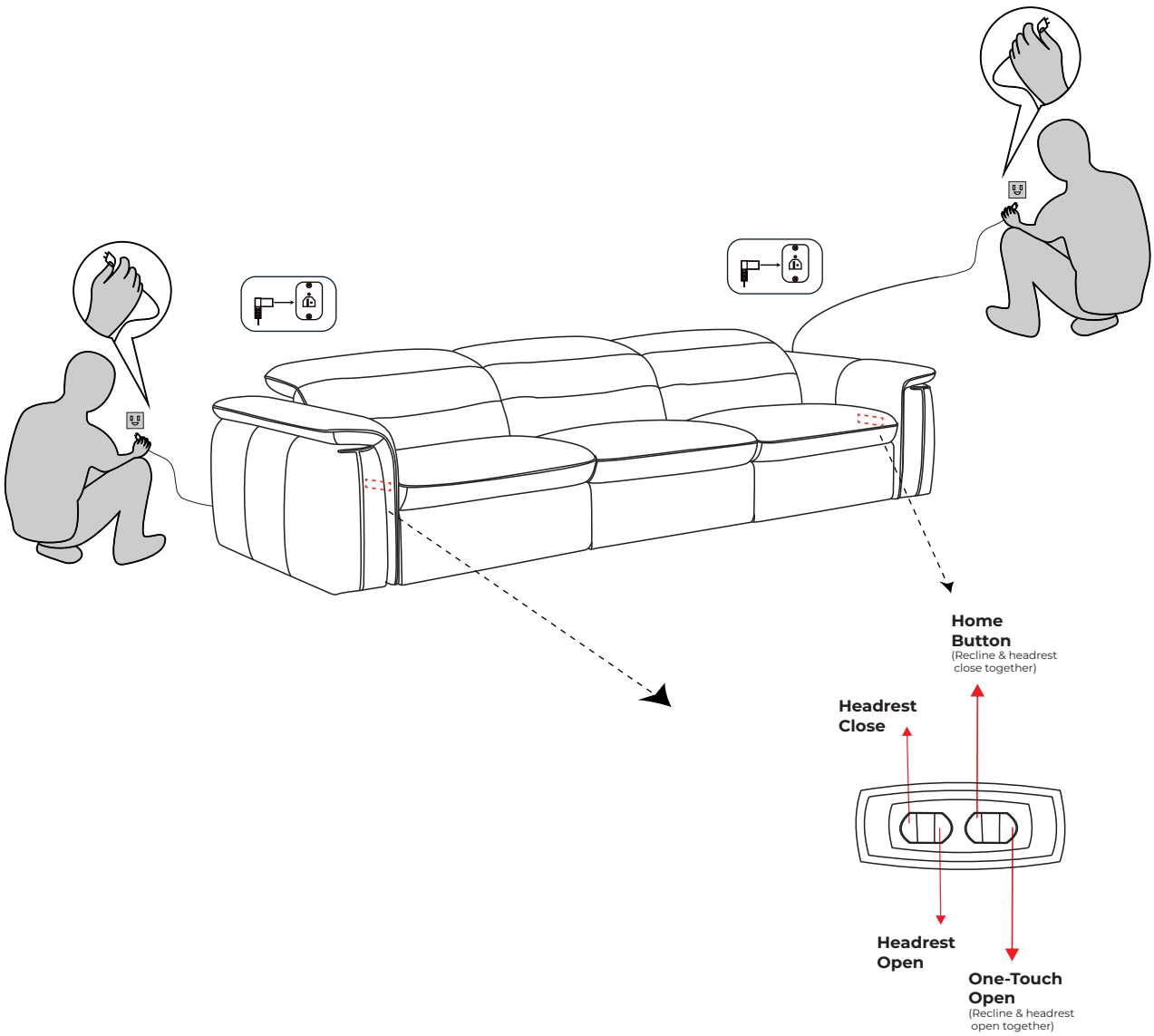
Step 2: Plug the power cord of either the left or right power armchair into the power outlet.
Note: After all the connections are made, the green LED will be lit up.