INSTALLATION INSTRUCTIONS

Step1: Drill Holes in Wall for screws or screw anchors and attached Mounting plate to Wall

Determine your desired location for installation and make a mark for the location of the mounting plate. Remove mounting plate from backplate by loosening set screw in backplate as pictured below. Place center hole of mounting plate over mark made above. Make 2 marks where mounting screws will be placed as shown below. Drill hole at each of the marks. (You may substitute other style mounting anchors or screws if desired). Place anchors into the holes made. Place mounting plate over holes and secure to mounting surface using screws as shown below.

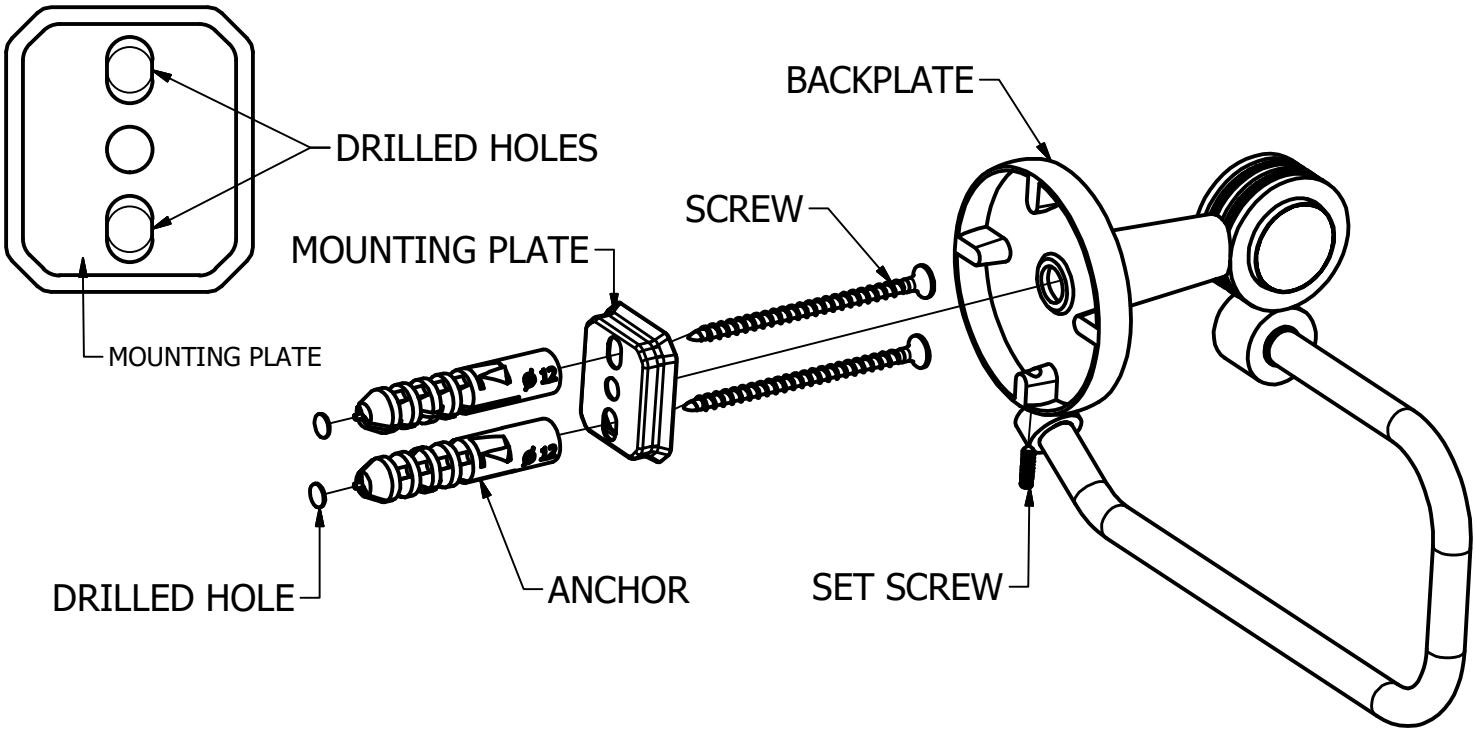

Step2: Attach Bracket to Mounting Plate
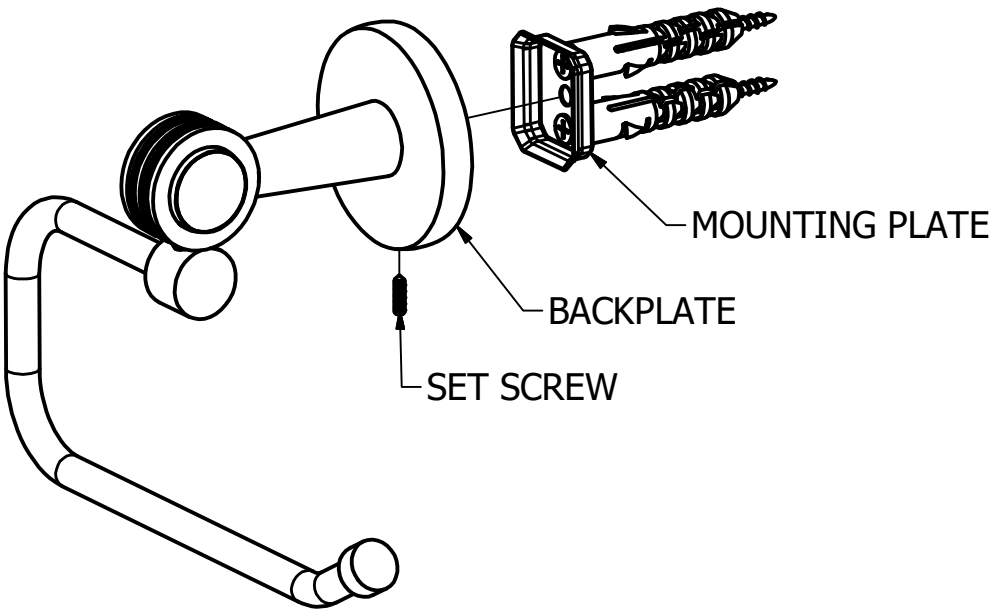
Place bracket on mounting plate and secure by tightening set screw as shown below.