Thank you for choosing a **Palace Imports** product.

Your complete satisfaction is our top priority.

Customer Service and Warranty Information

- **For Warranty Assistance:**
  If you experience any issues or require additional information regarding your warranty, please do not contact the place of purchase. Instead, reach out directly to our Customer Service Team at **info@palaceimportsinc.com** or visit our website at **www.palaceimportsinc.com** for prompt support.

- **Warranty Coverage:**
  PALACE IMPORTS warrants its products to the original purchaser against defects in materials or workmanship. A defect is defined as any flaw that impairs the normal use of the product. This warranty is limited to the replacement of defective parts or components and is valid for one (1) year from the date of purchase.

- **Warranty Limitations:**
  This warranty covers products used under normal household conditions. It does not apply to furniture used outdoors or damage resulting from improper assembly or disassembly, product modification, intentional damage, accidents, misuse, exposure to elements, or any labor or assembly costs.

- **Additional Terms:**
  PALACE IMPORTS reserves the right to require proof of purchase to process any warranty claim. We are not liable for any incidental or consequential damages arising from the misuse of our products.

Palace
Imports
100% Wood Furniture

ASSEMBLY GUIDE
2-DRAWER KIT

SKU 9301 - White
SKU 9303 - Mocha
SKU 9305 - Gray
SKU 9307 - Black
SKU 9308 - Teal
SKU 930-10 - Yellow
SKU 930-11 - Aqua
SKU 930-12 - Green
SKU 930-13 - Sage
SKU 930-14 - Beige
SKU 930-15 - Navy Blue
SKU 930-16 - Antique Blue

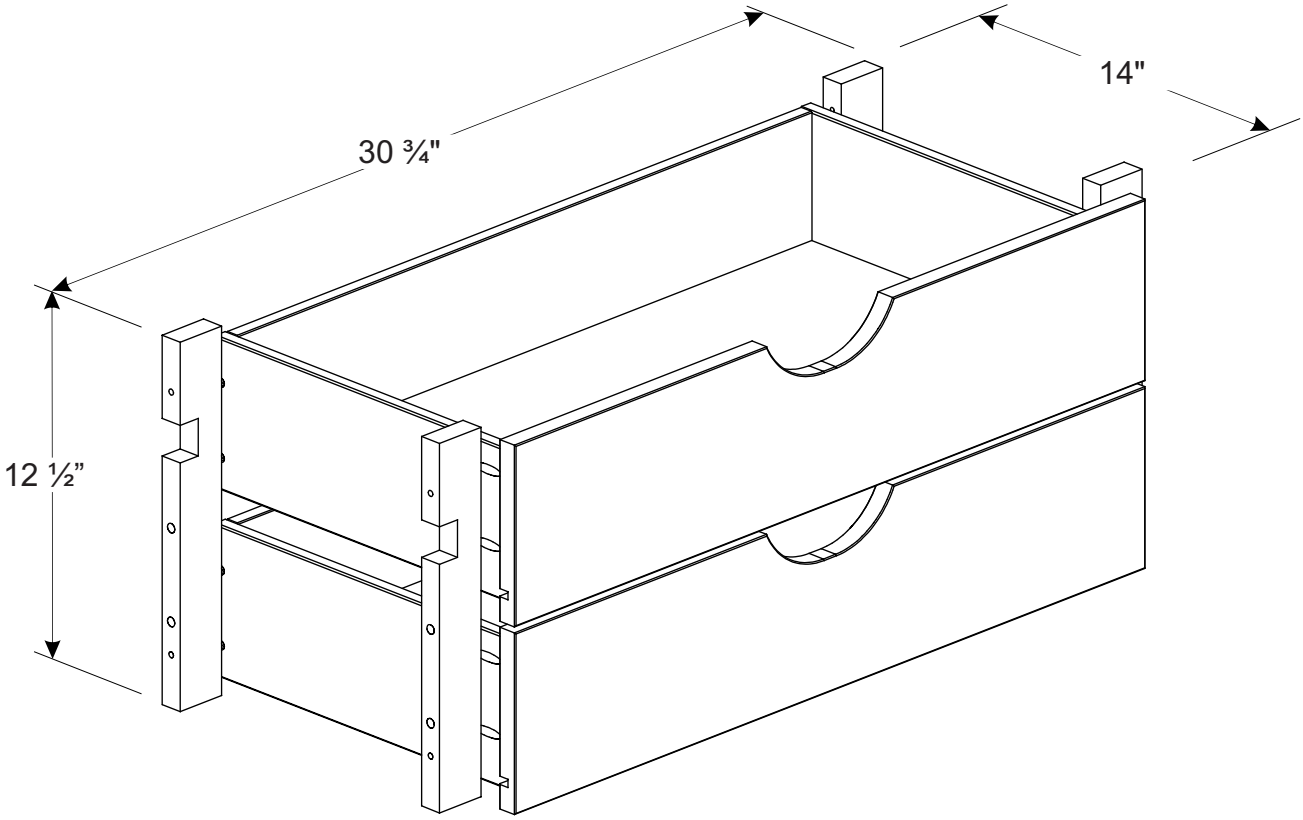

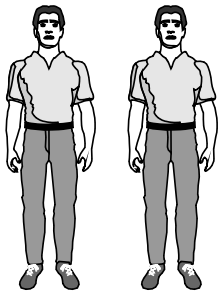

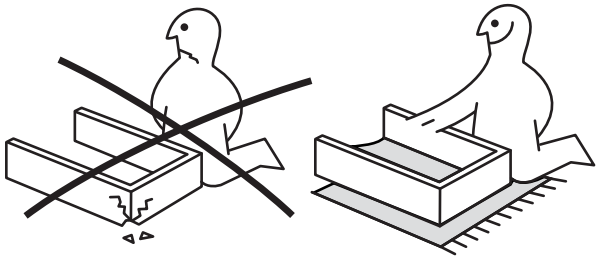

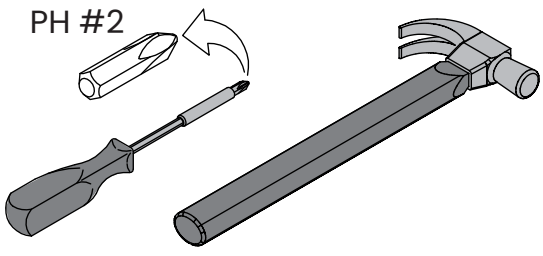

Before You Begin Assembly

- Carefully inspect the package contents. A complete parts checklist is provided below.
- If any parts are missing or damaged, please contact us at info@palaceimportsinc.com for assistance.

Assembly Tips

- Assemble the item on a flat, smooth surface. We recommend placing a blanket or protective covering underneath to prevent scratches.
- Use a power drill **only at a low-speed setting** to avoid damaging components.
- Assemble the product as close as possible to its final location to minimize the need for moving it later.
- Important: The hardware pack contains small parts that may pose a choking hazard. **Keep all small items out of reach of young children.**

PARTS LAYOUT

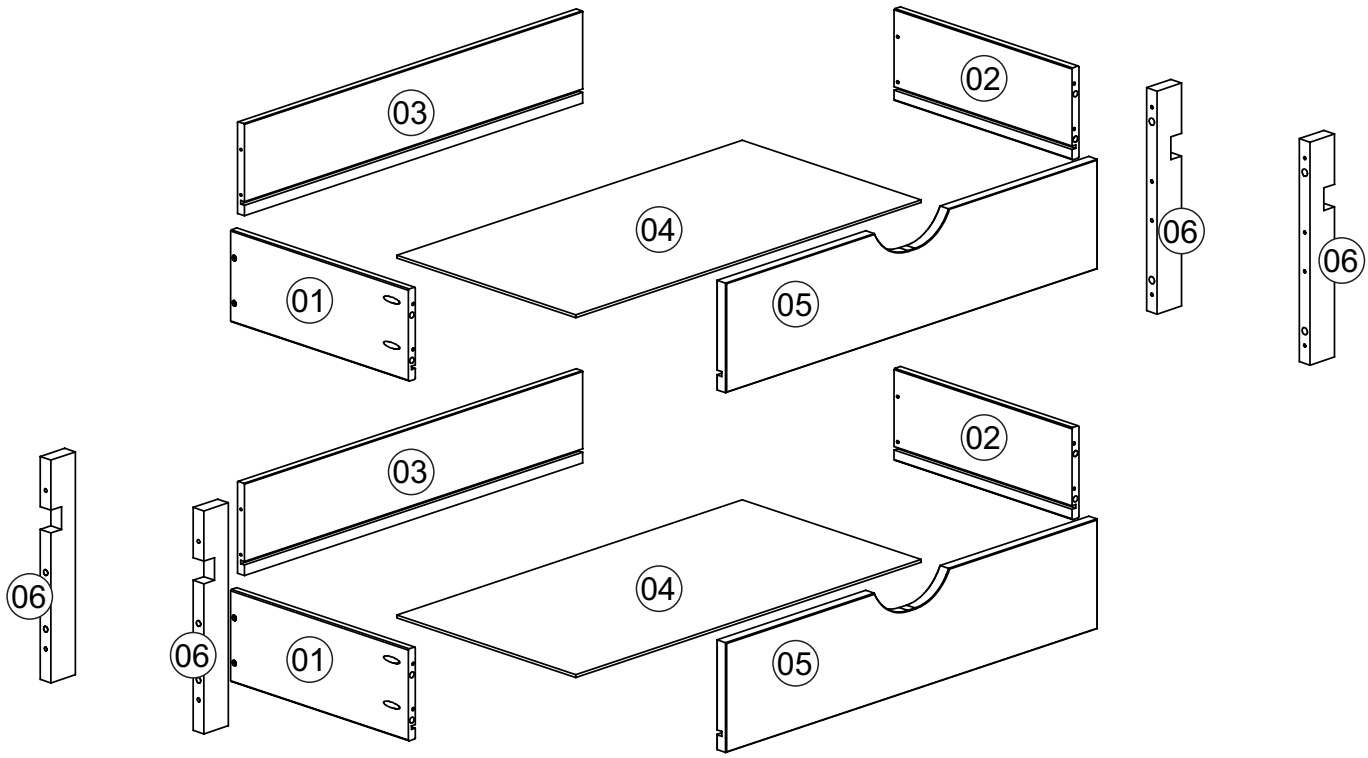

Screws Are Illustrated at Actual Size for Accurate Reference

A1	4,0x30	24+2
A42	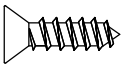 4,0x14	08+1
B31	6,0x10	08+1
C2	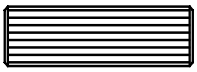 8,0x25	08+1
D4	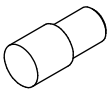	08+1
E1	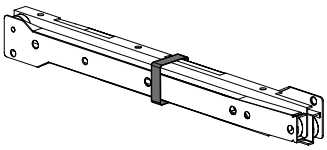 330mm - 13″	02
E2		02

WARNING:
CHOKING HAZARD
Small Parts.
Adult Supervision Required.
Not for children under 3 years old.

01)

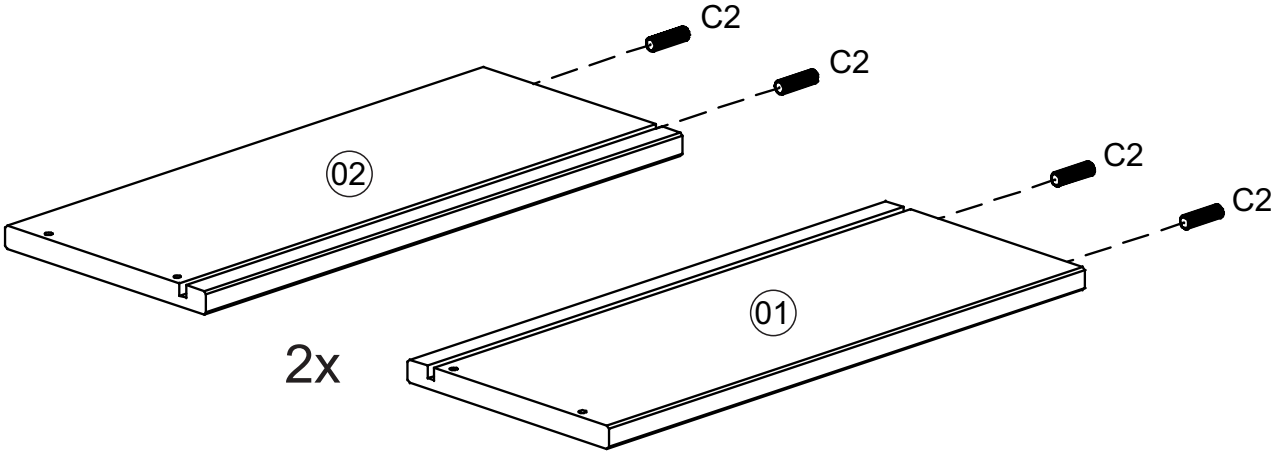

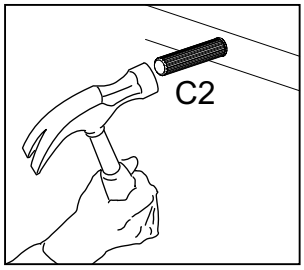

C2	8,0x25	08

02)

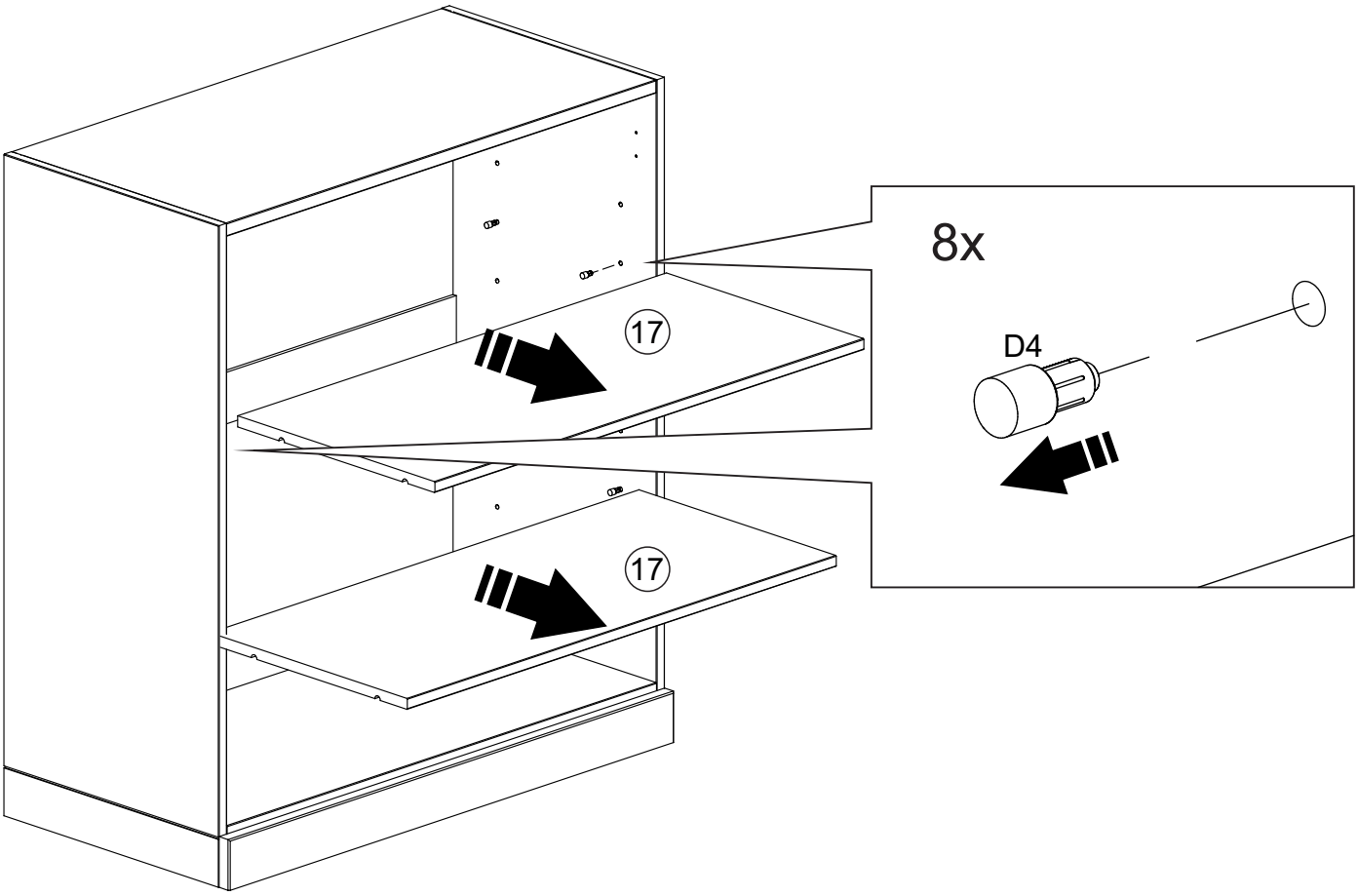

03) Installing Drawers at the Top

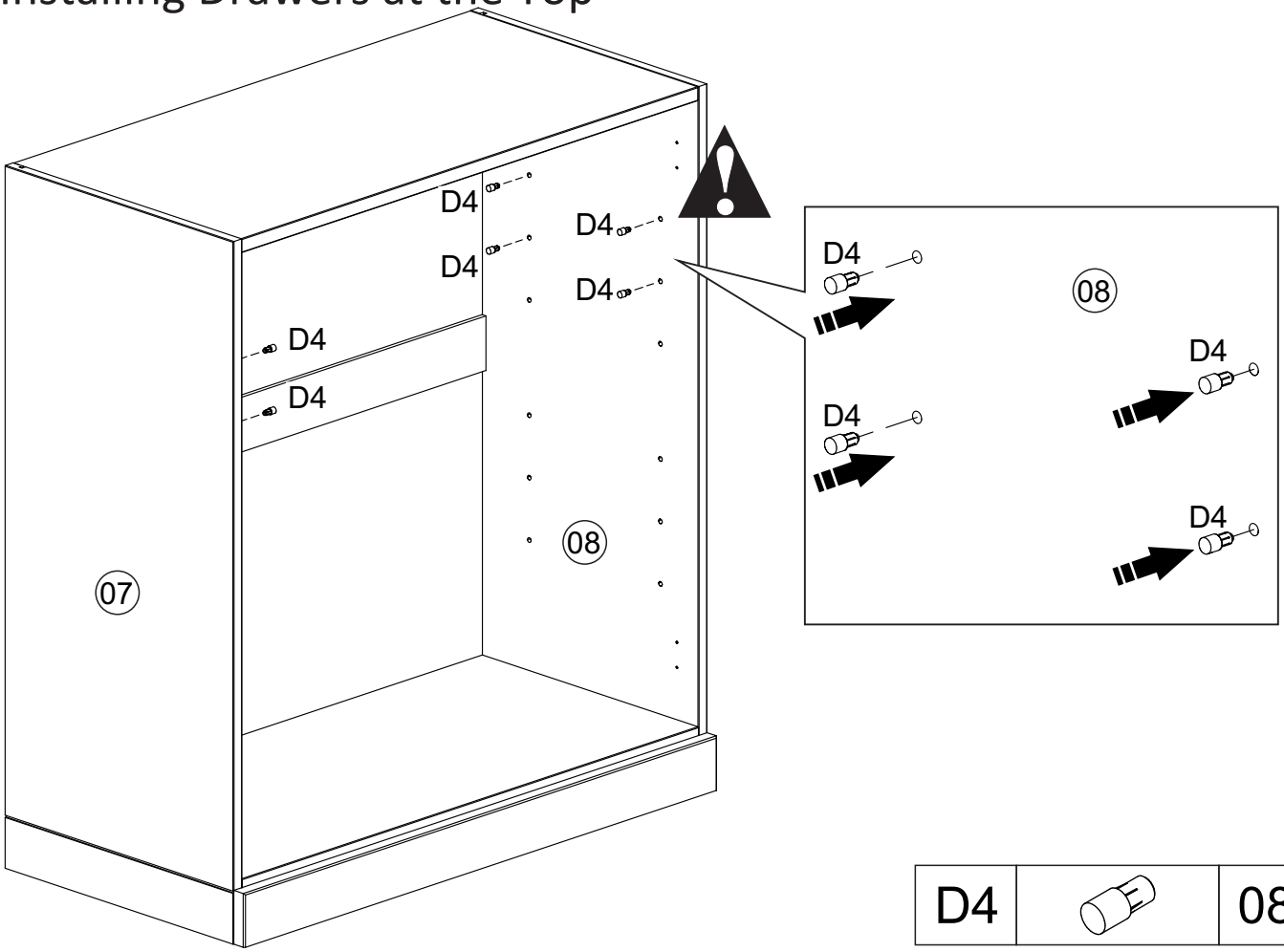

D4		08

03) Installing Drawers at the Bottom

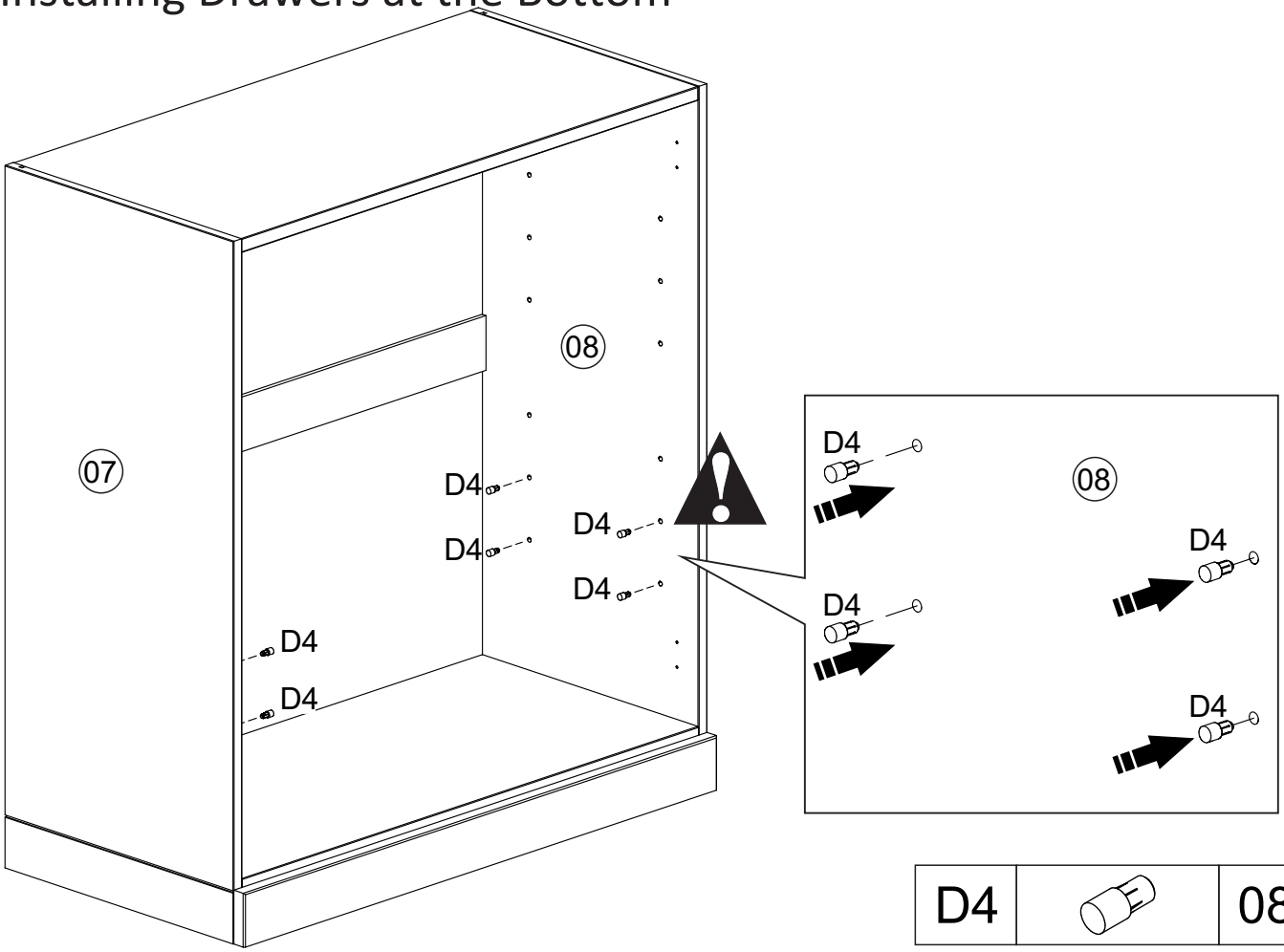

D4		08

04) Installing Drawers at the Top

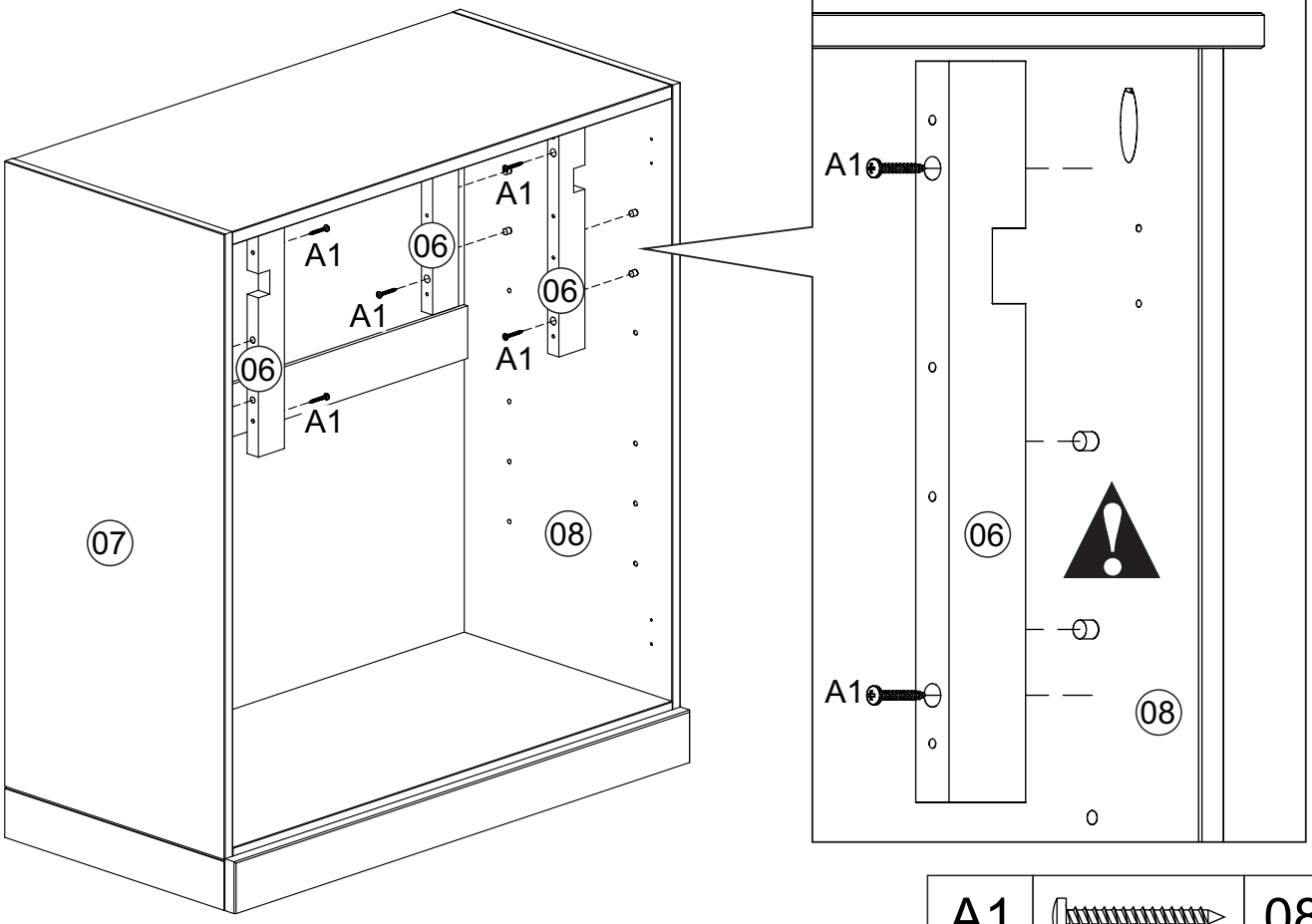

A1	4,0x30	08

04) Installing Drawers at the Bottom

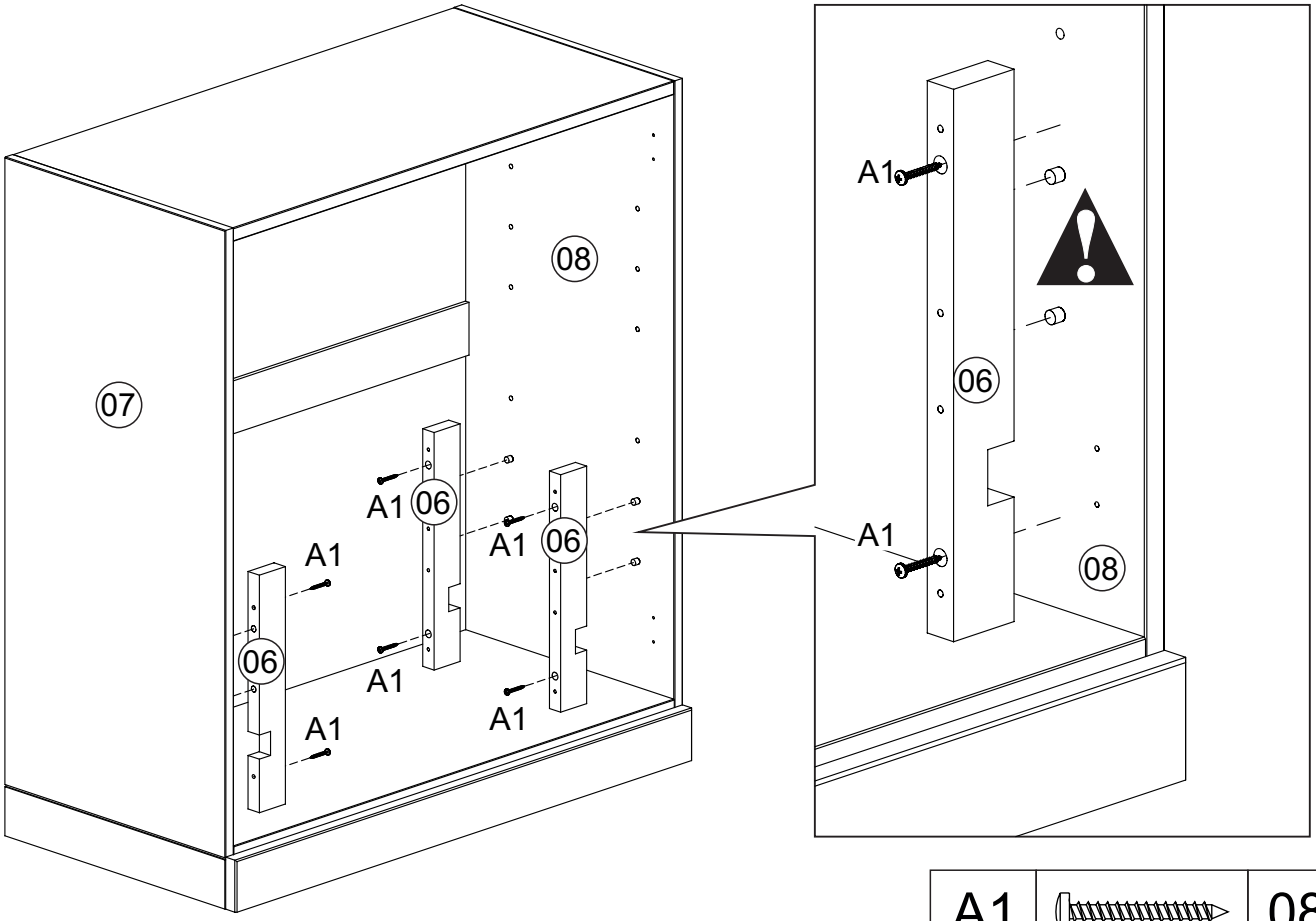

A1	4,0x30	08

05) Installing Drawers at the Top

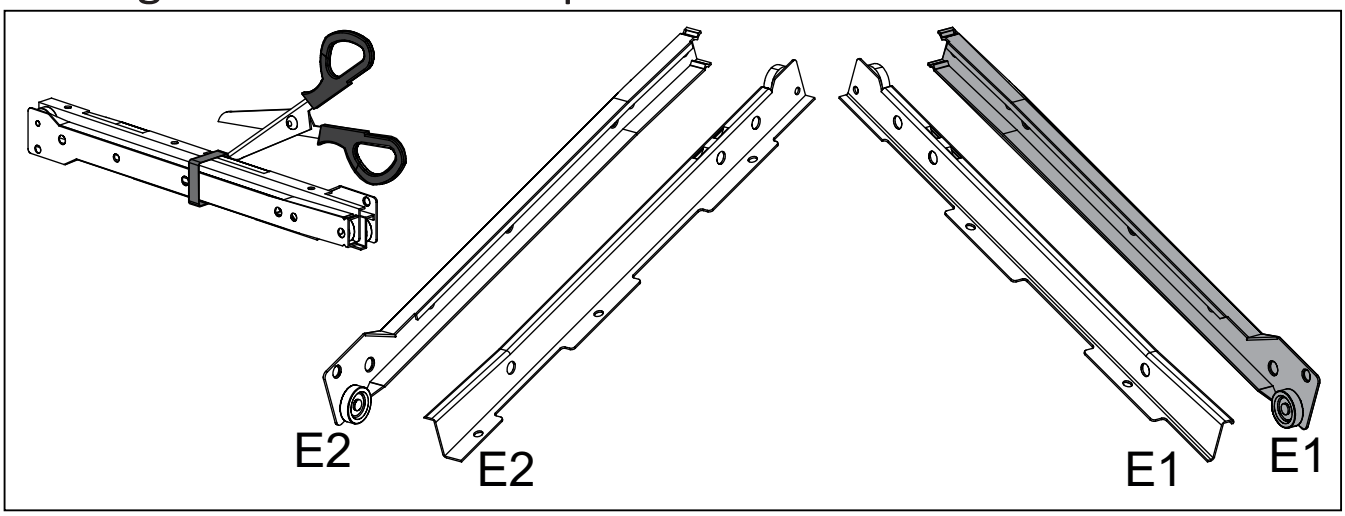

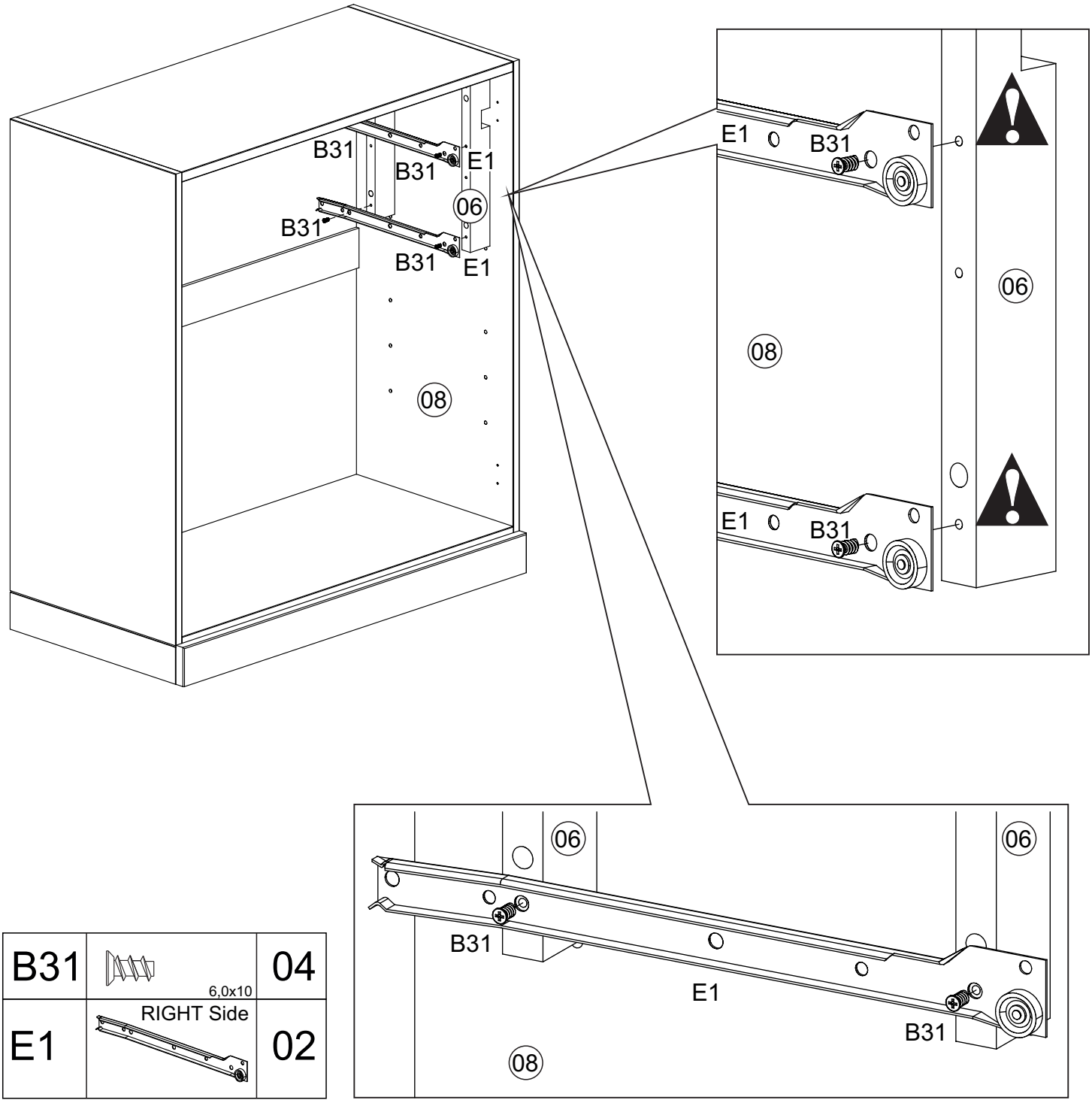

B31	6,0x10	04
E1	RIGHT Side	02

06) Installing Drawers at the Top

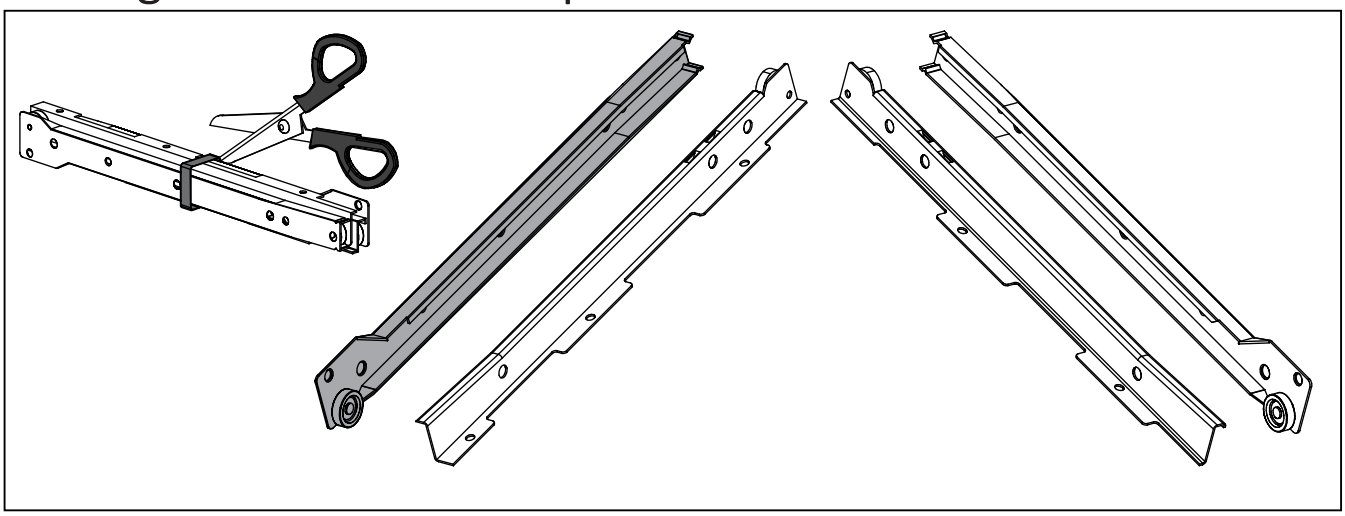

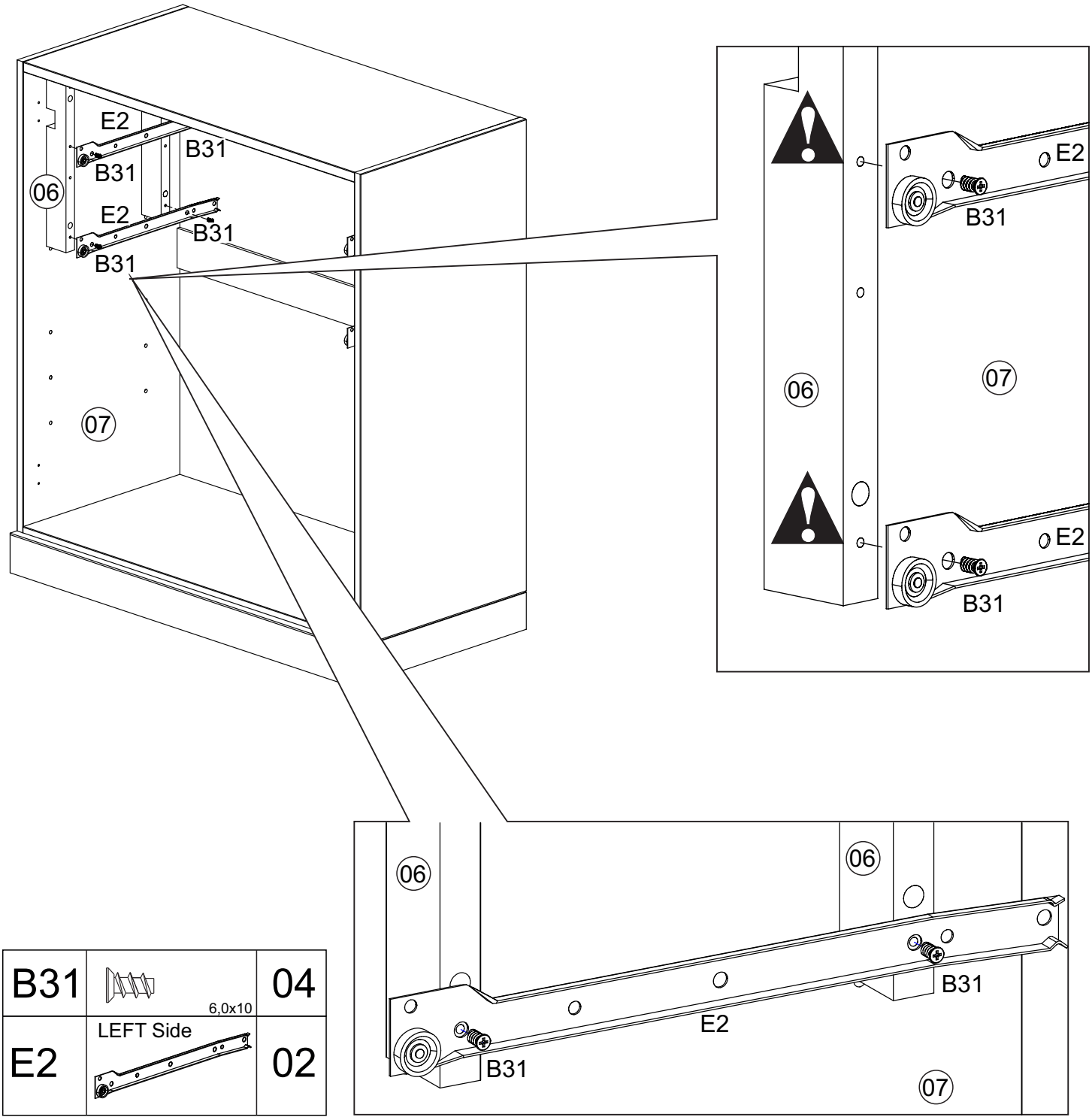

B31	6,0x10	04
E2	LEFT Side	02

05) Installing Drawers at the Bottom

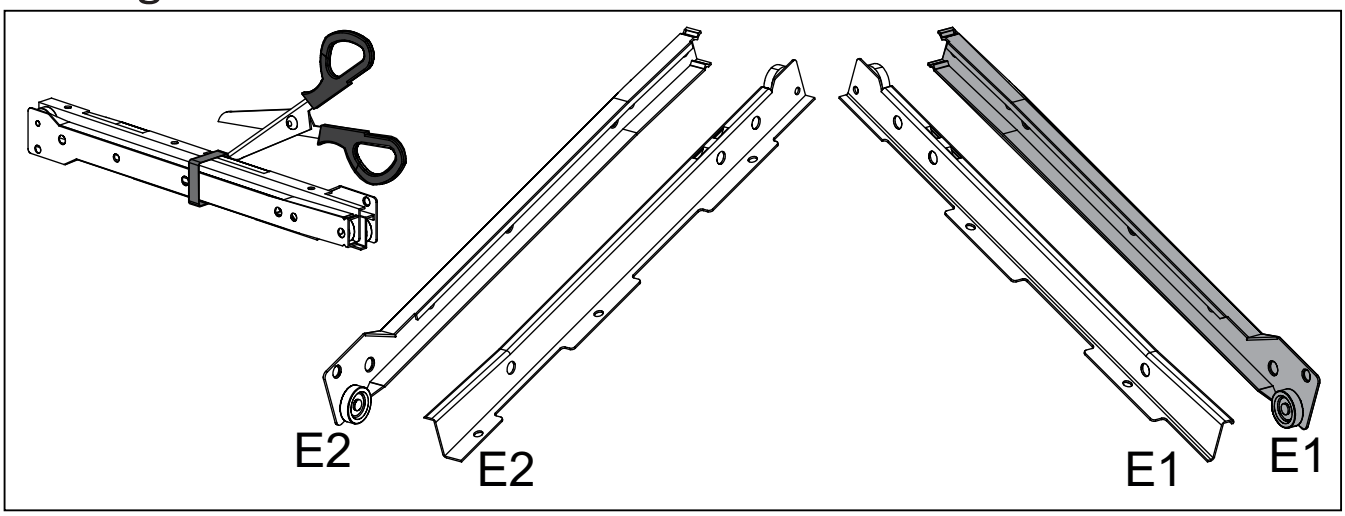

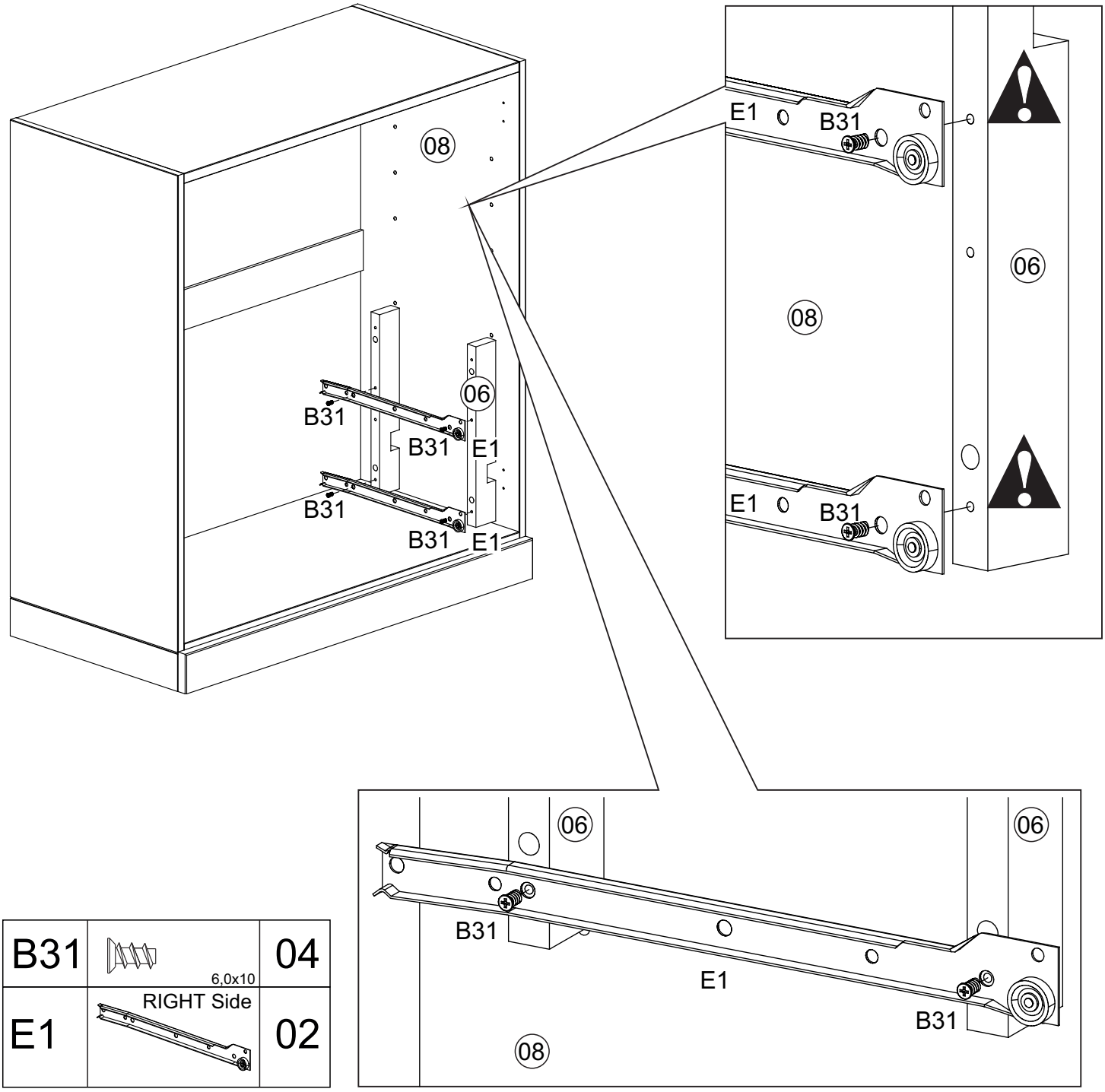

B31	6,0x10	04
E1	RIGHT Side	02

06) Installing Drawers at the Bottom

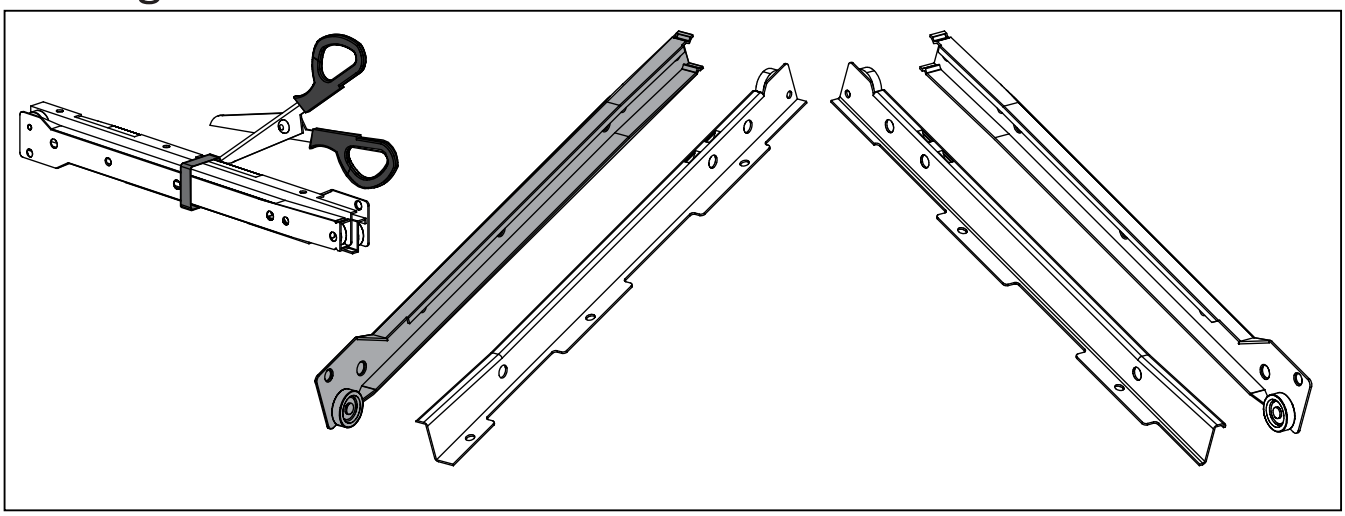

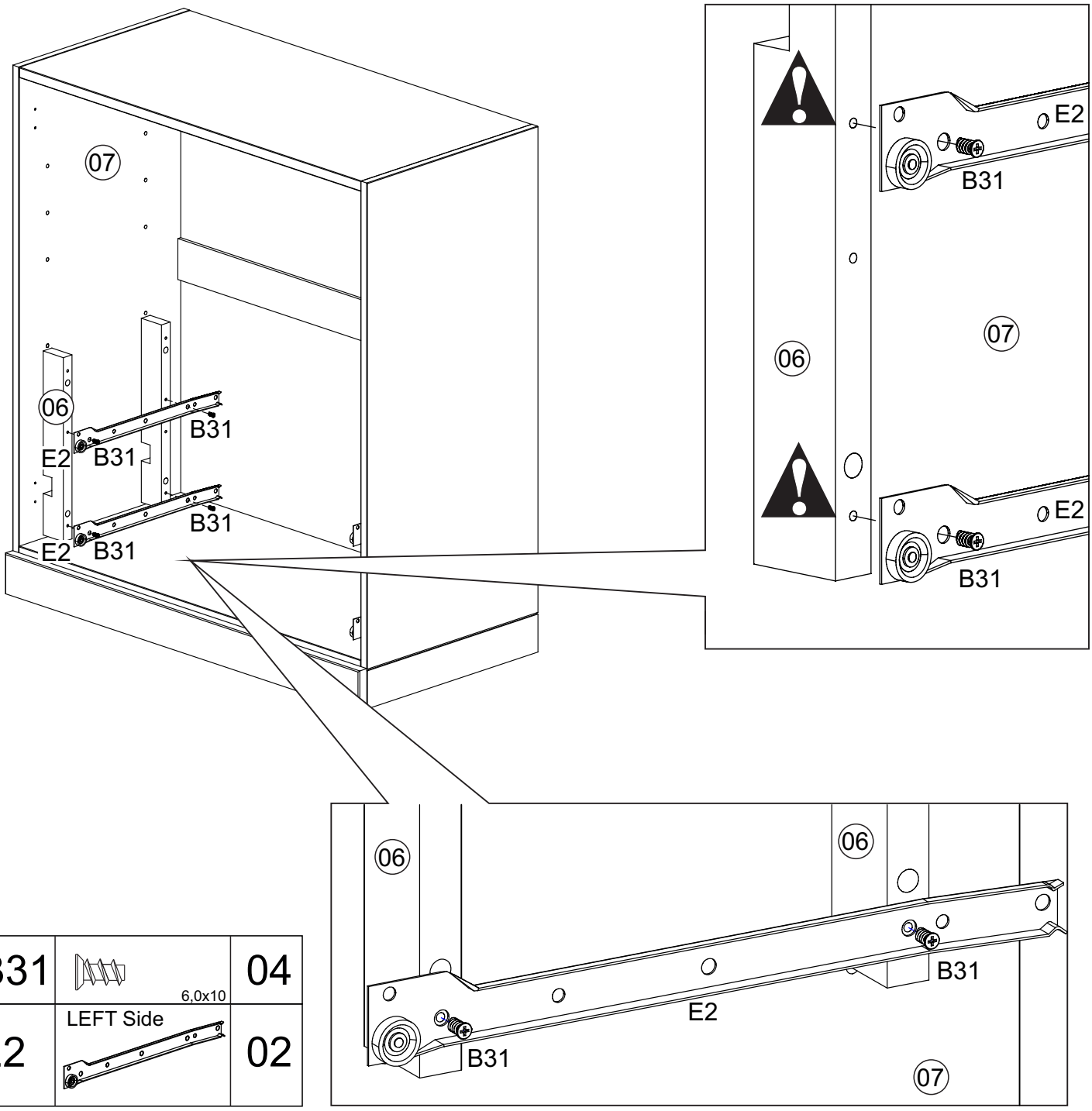

B31	6,0x10	04
E2	LEFT Side	02

07) 2x

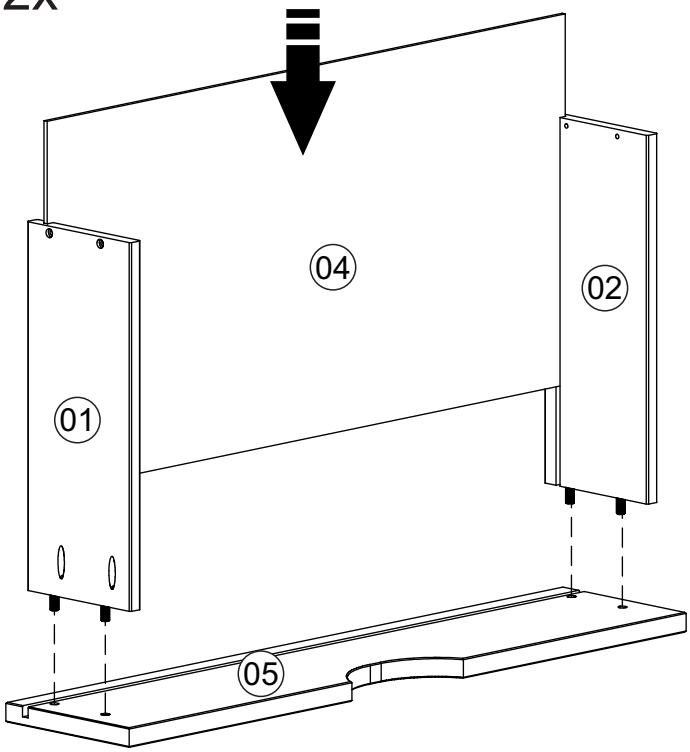

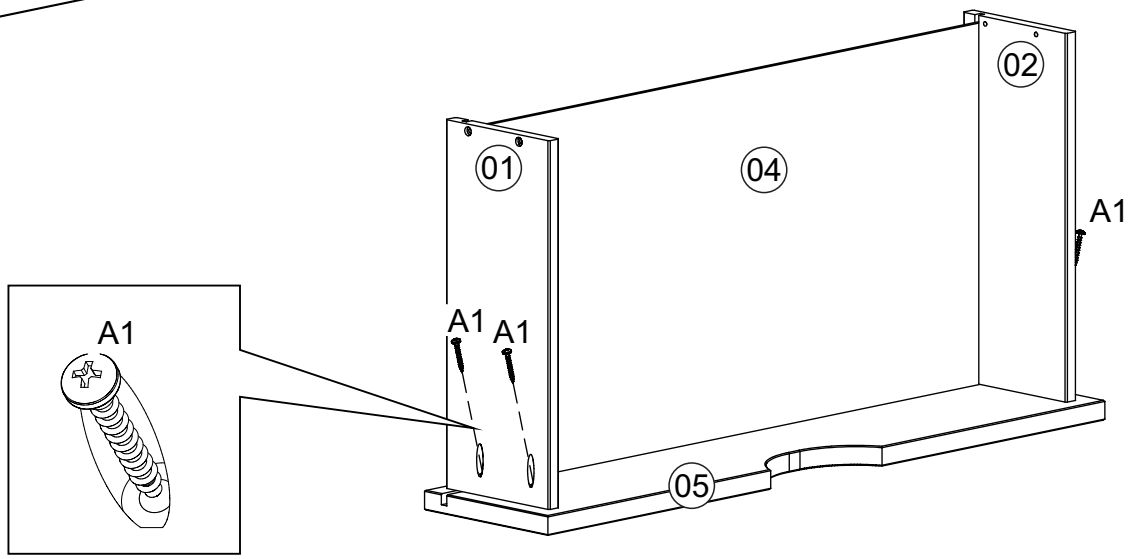

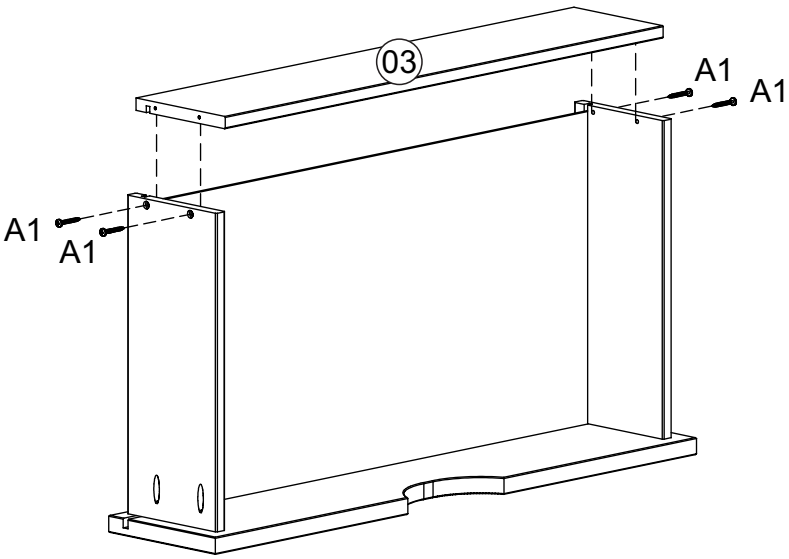

A1	4,0x30	16

08)

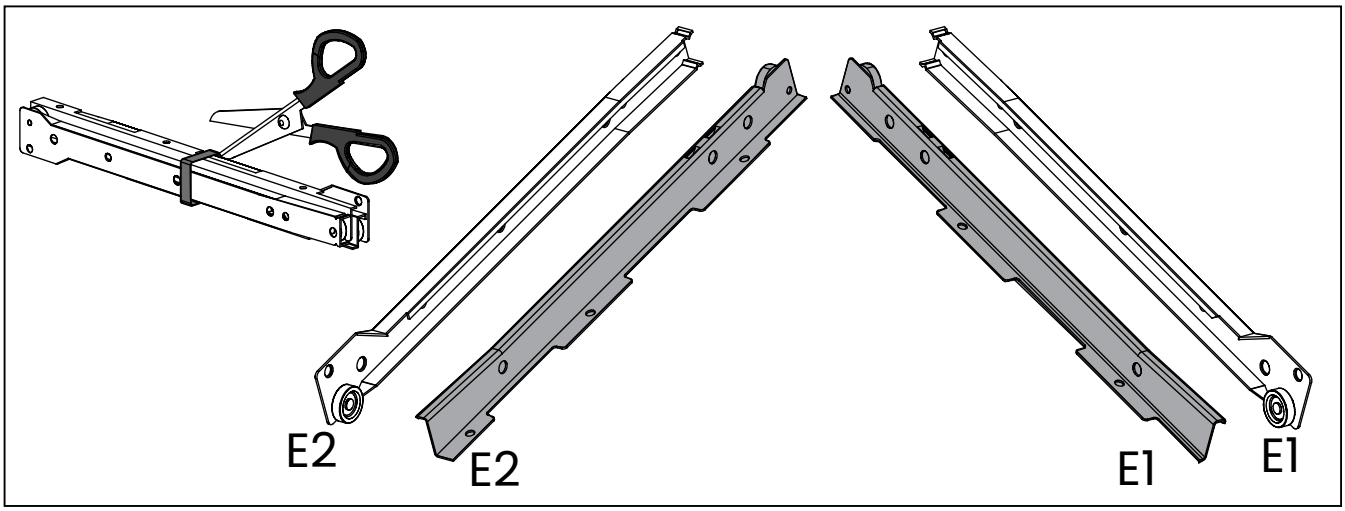

2x

Flip the assembled drawer upside down to attach the glides.

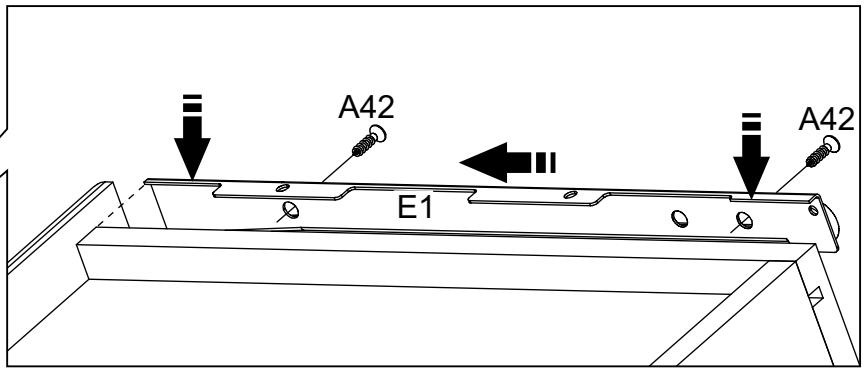

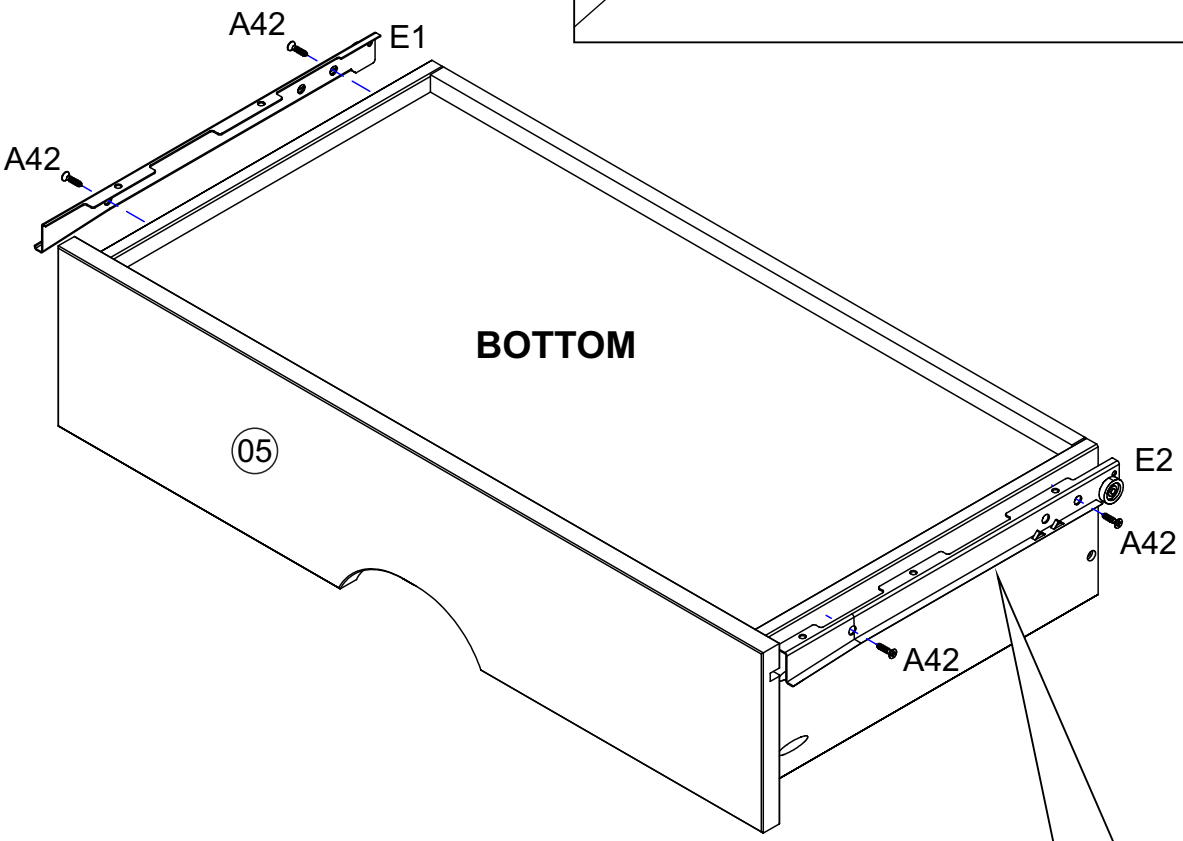

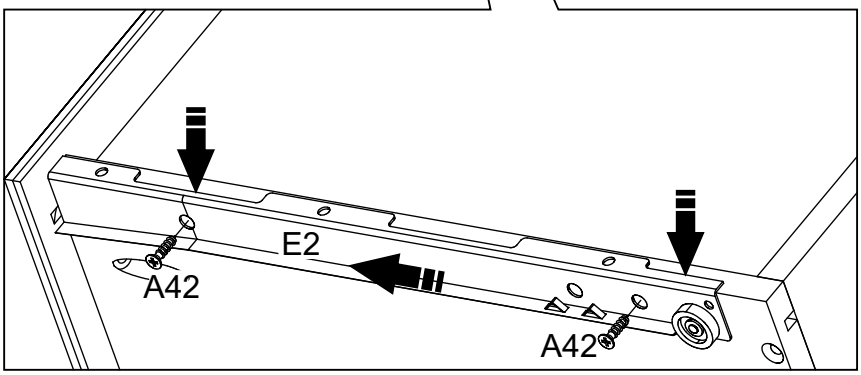

A42	4,0x14	08
E1	330mm - 13"	02
E2	330mm - 13"	02

09) Installing Drawers at the Top

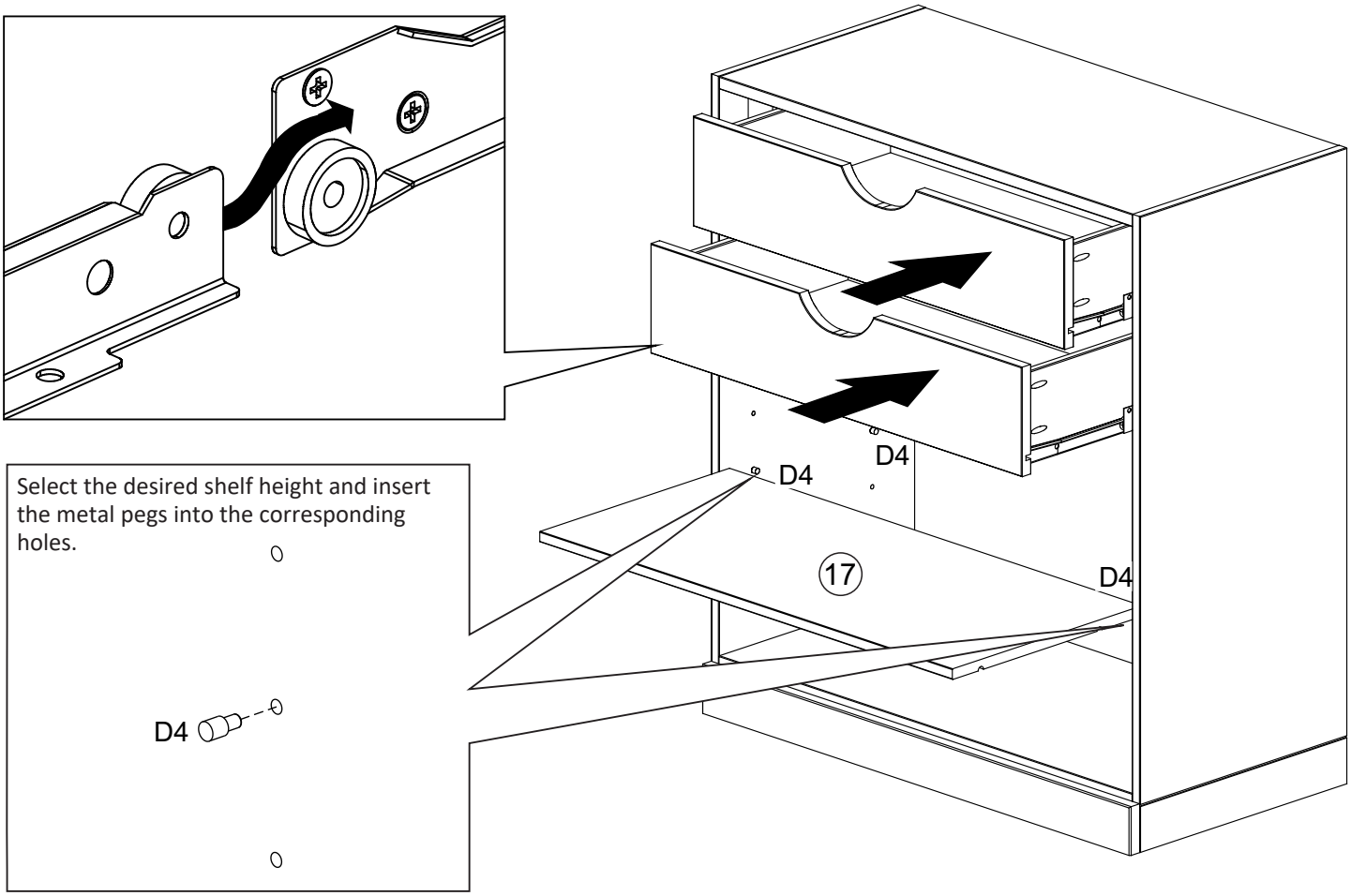

10) Installing Drawers at the Bottom

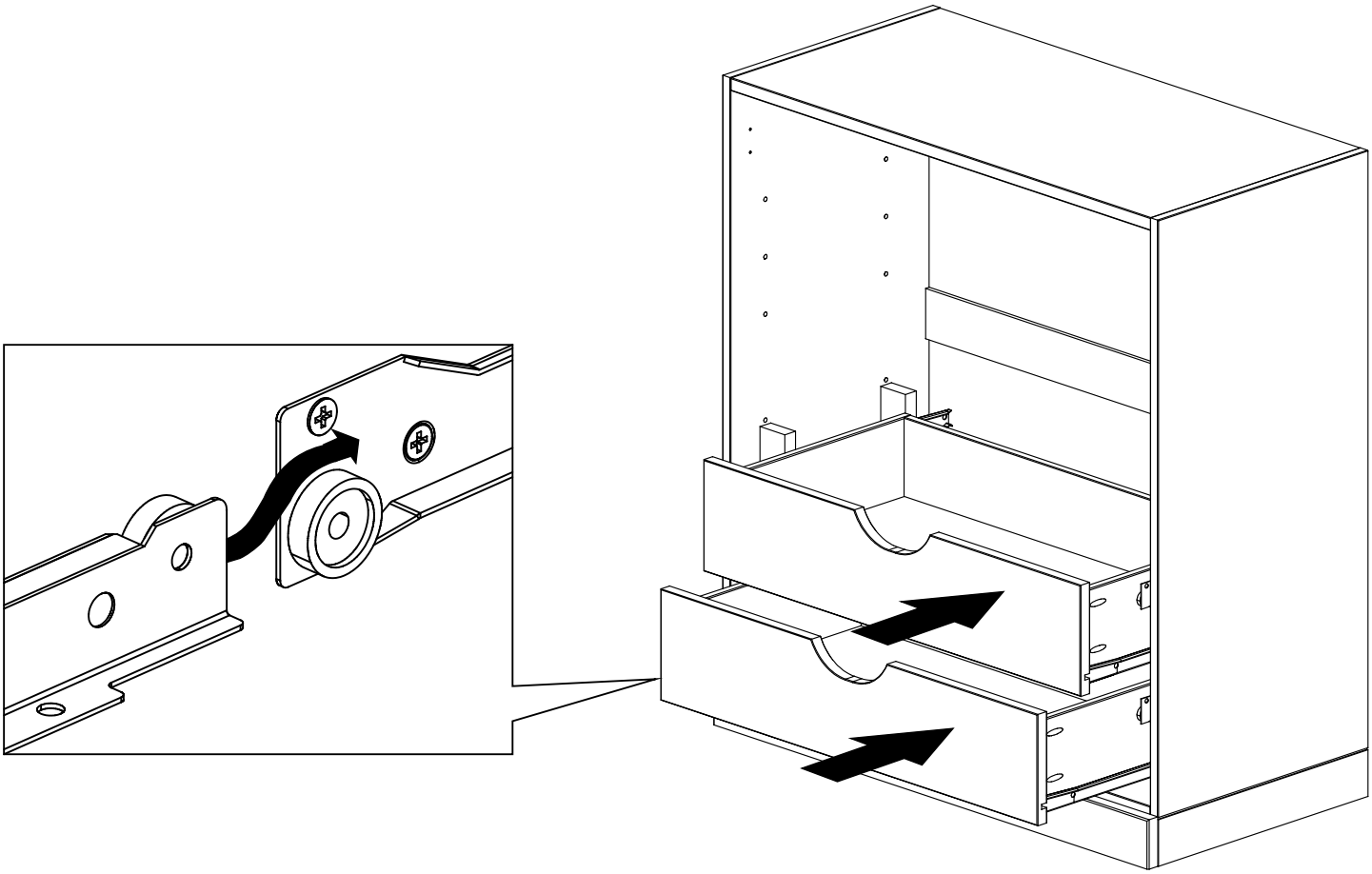

11) Installing Drawers at the Bottom

Select the desired shelf height and insert the metal pegs into the corresponding holes.

D4

D4

D4

D4

17

D4

17

D4

D4

06

12) Adding a Second Set of Drawers to the Bottom *(Sold Separately)*

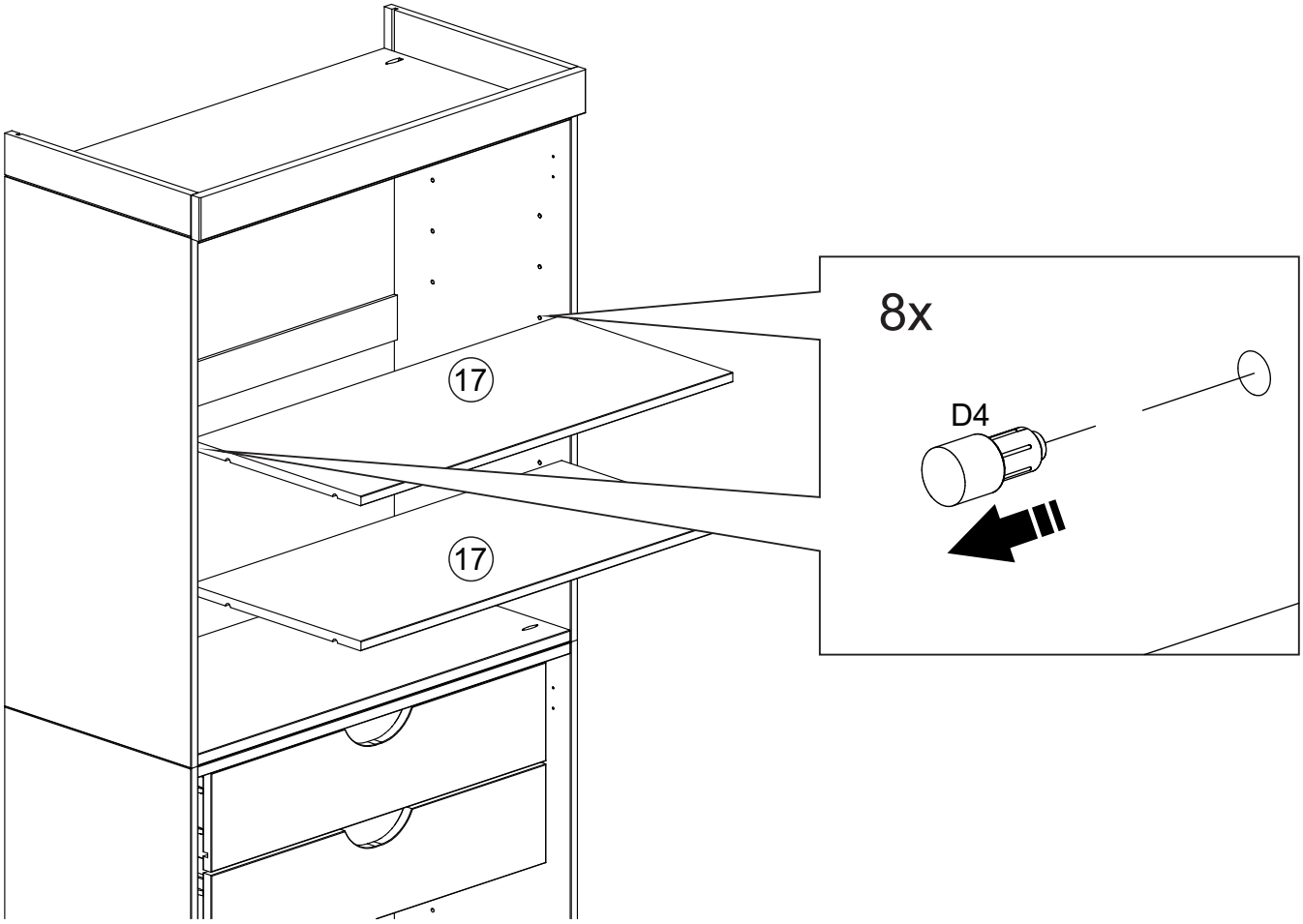

13) Adding a Second Set of Drawers to the Bottom *(Sold Separately)*

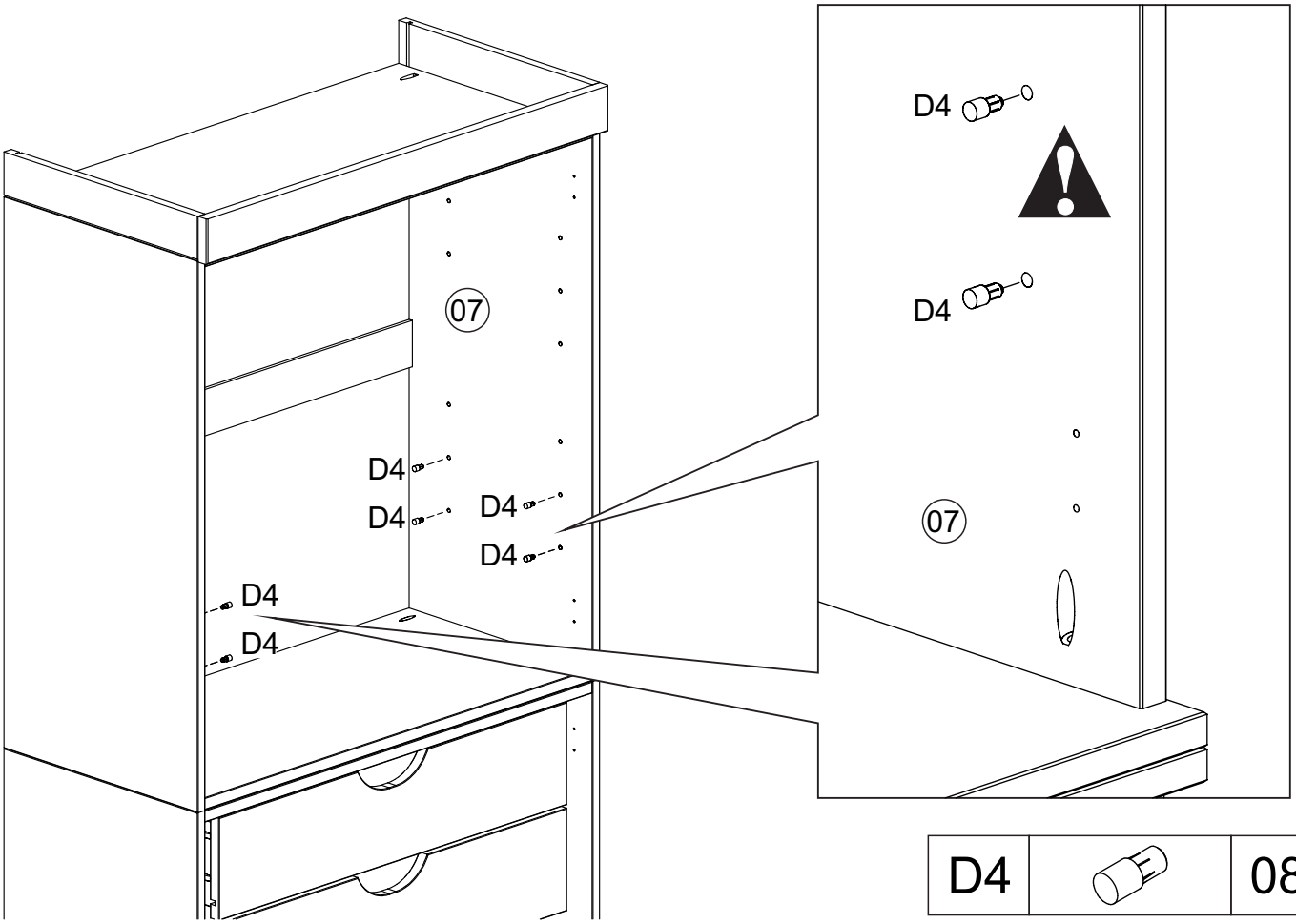

D4		08

14) Adding a Second Set of Drawers to the Bottom *(Sold Separately)*

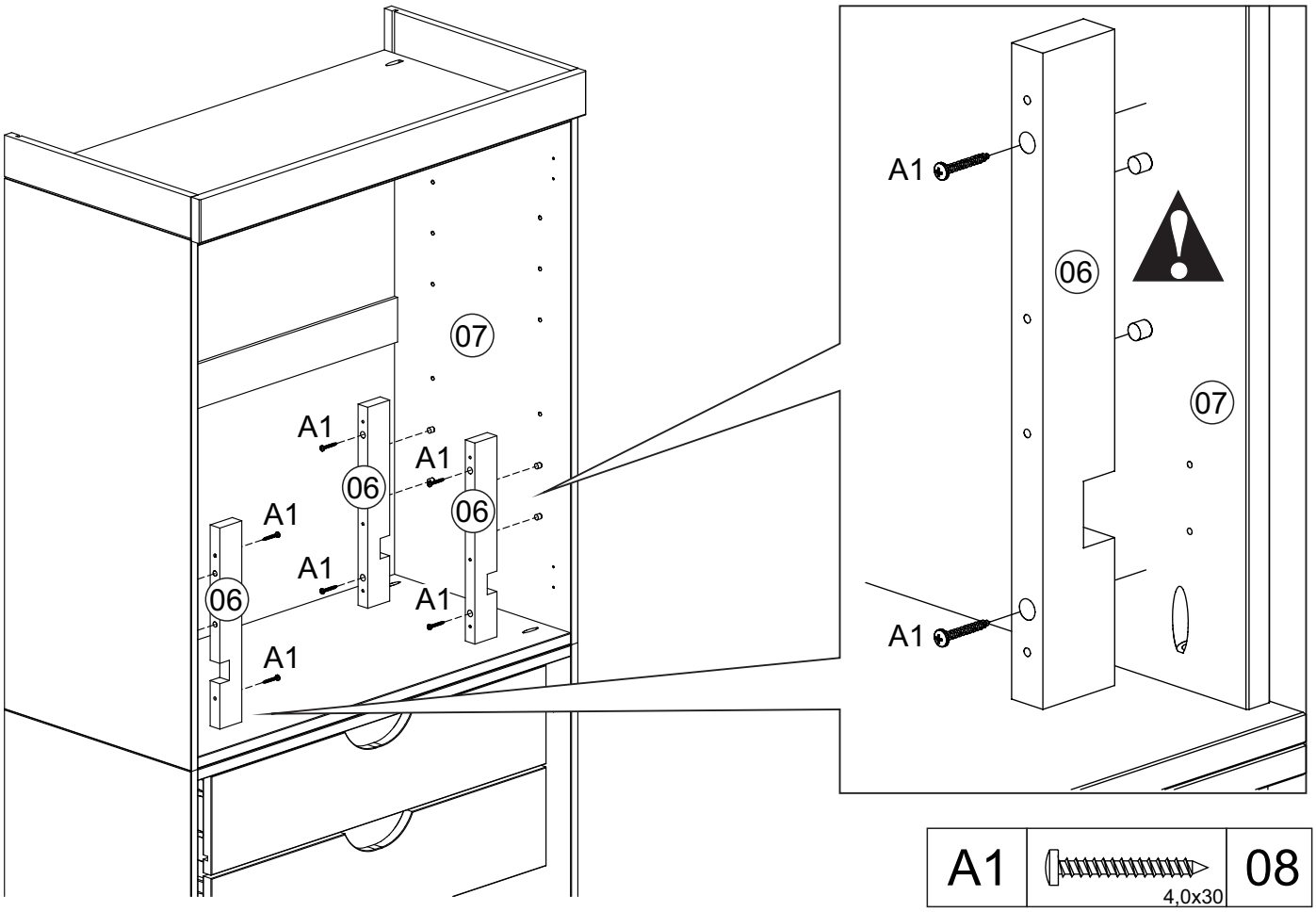

A1	4,0x30	08

15) Adding a Second Set of Drawers to the Bottom *(Sold Separately)*

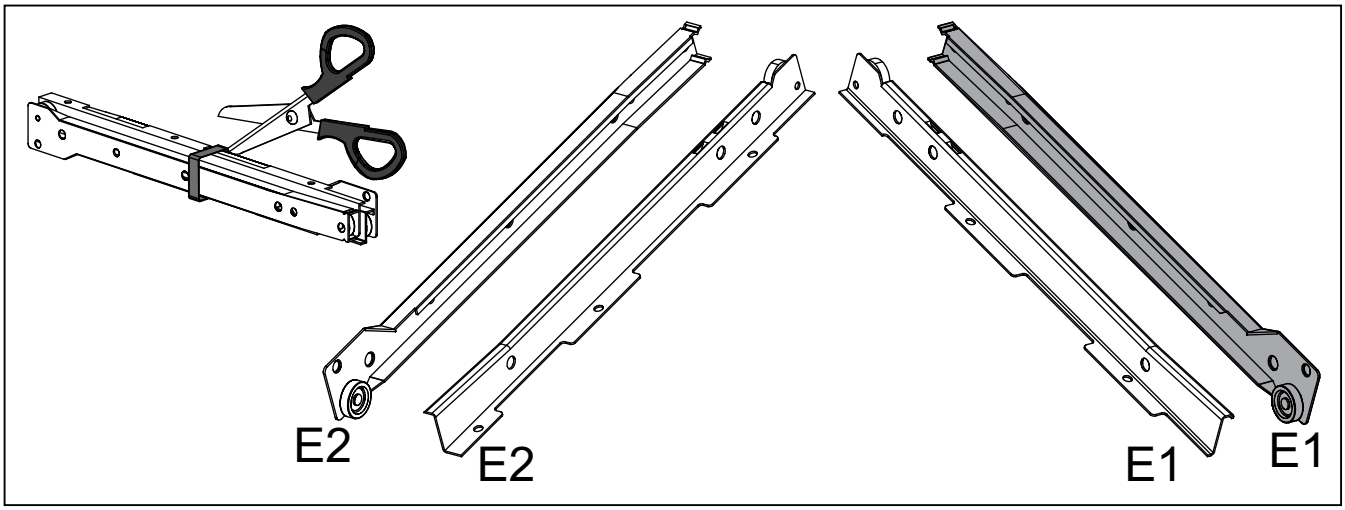

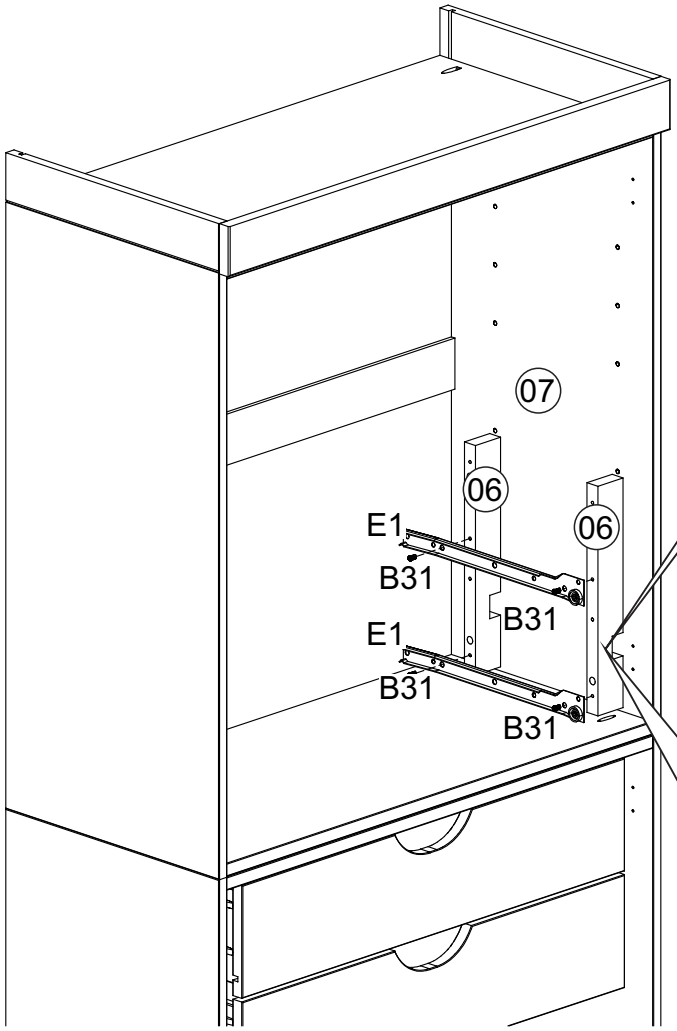

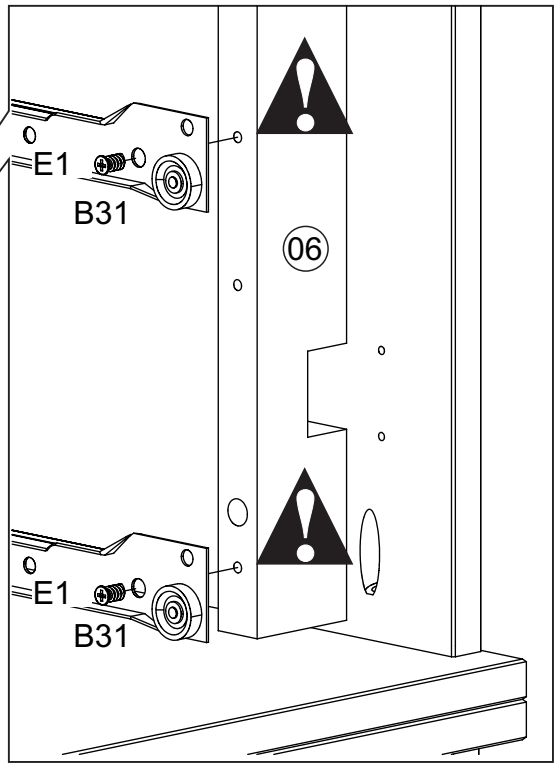

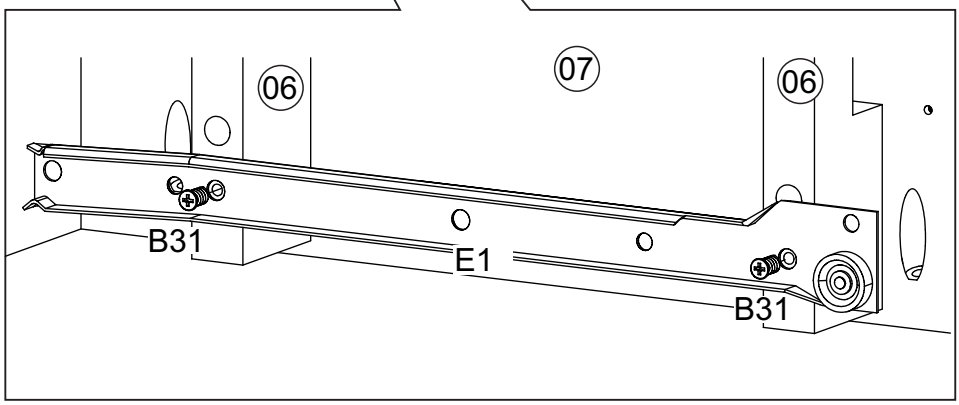

B31	6,0x10	04
E1	RIGHT Side	02

16) Adding a Second Set of Drawers to the Bottom *(Sold Separately)*

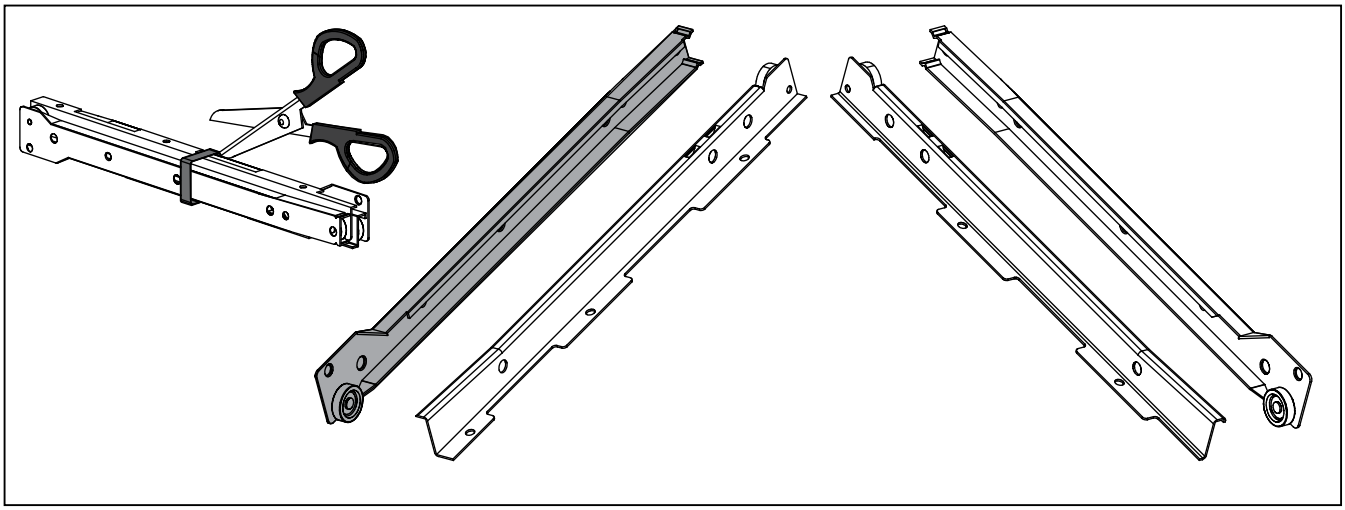

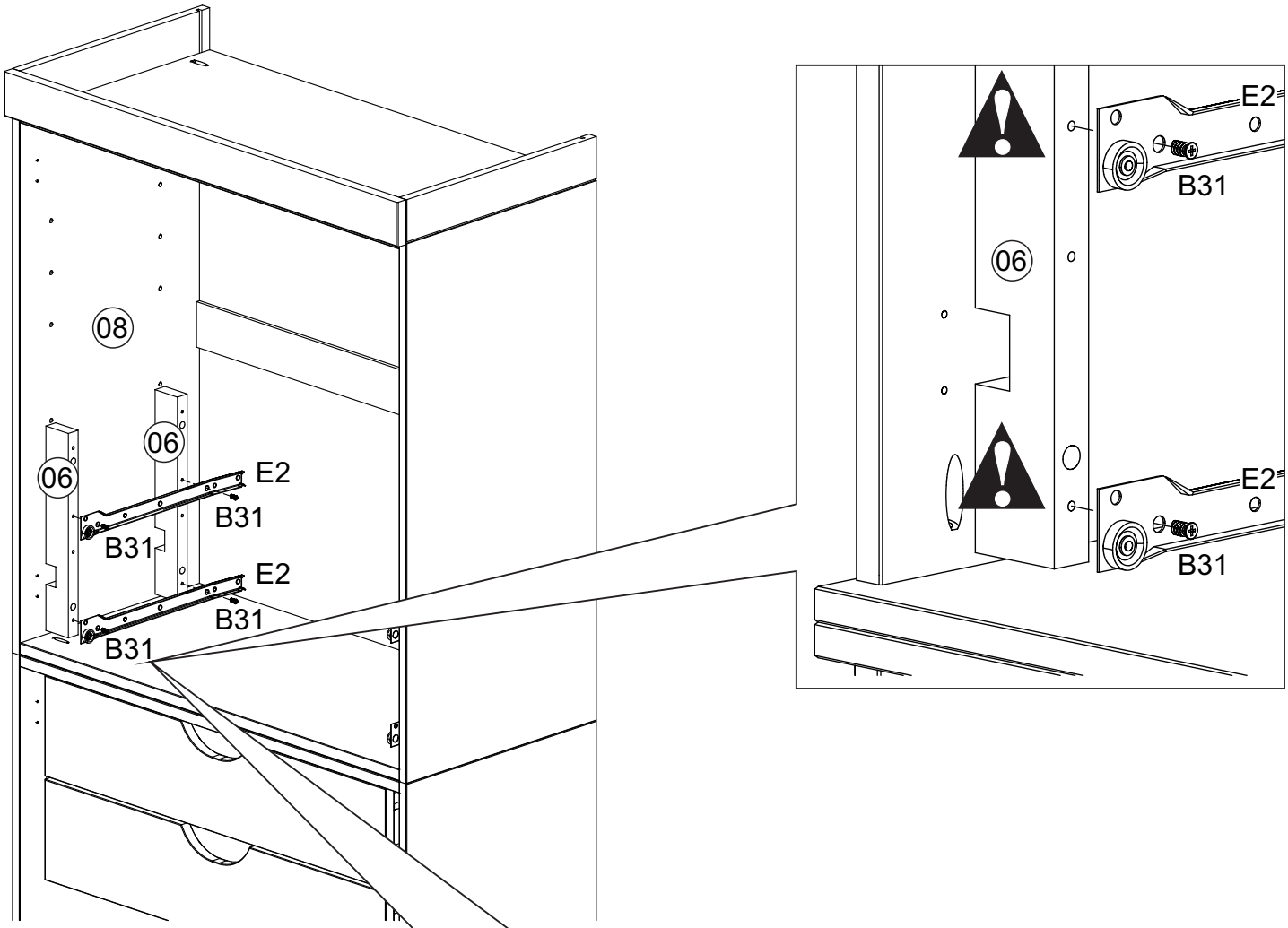

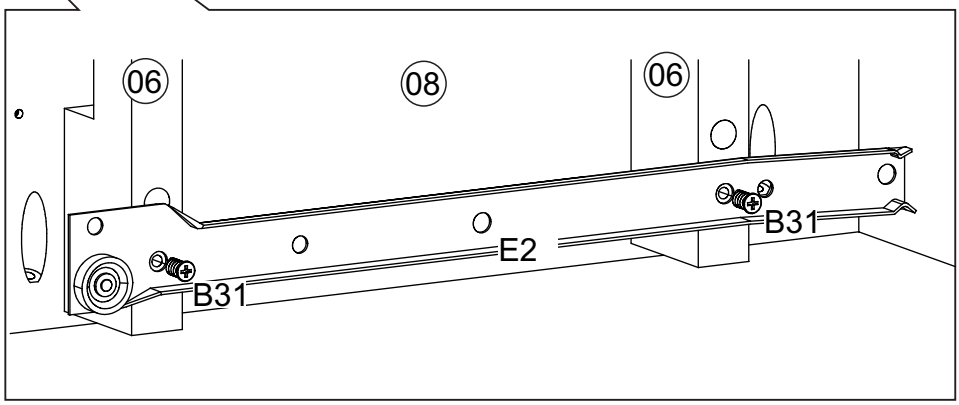

B31	6,0x10	04
E2	LEFT Side	02

17) Adding a Second Set of Drawers to the Bottom *(Sold Separately)*

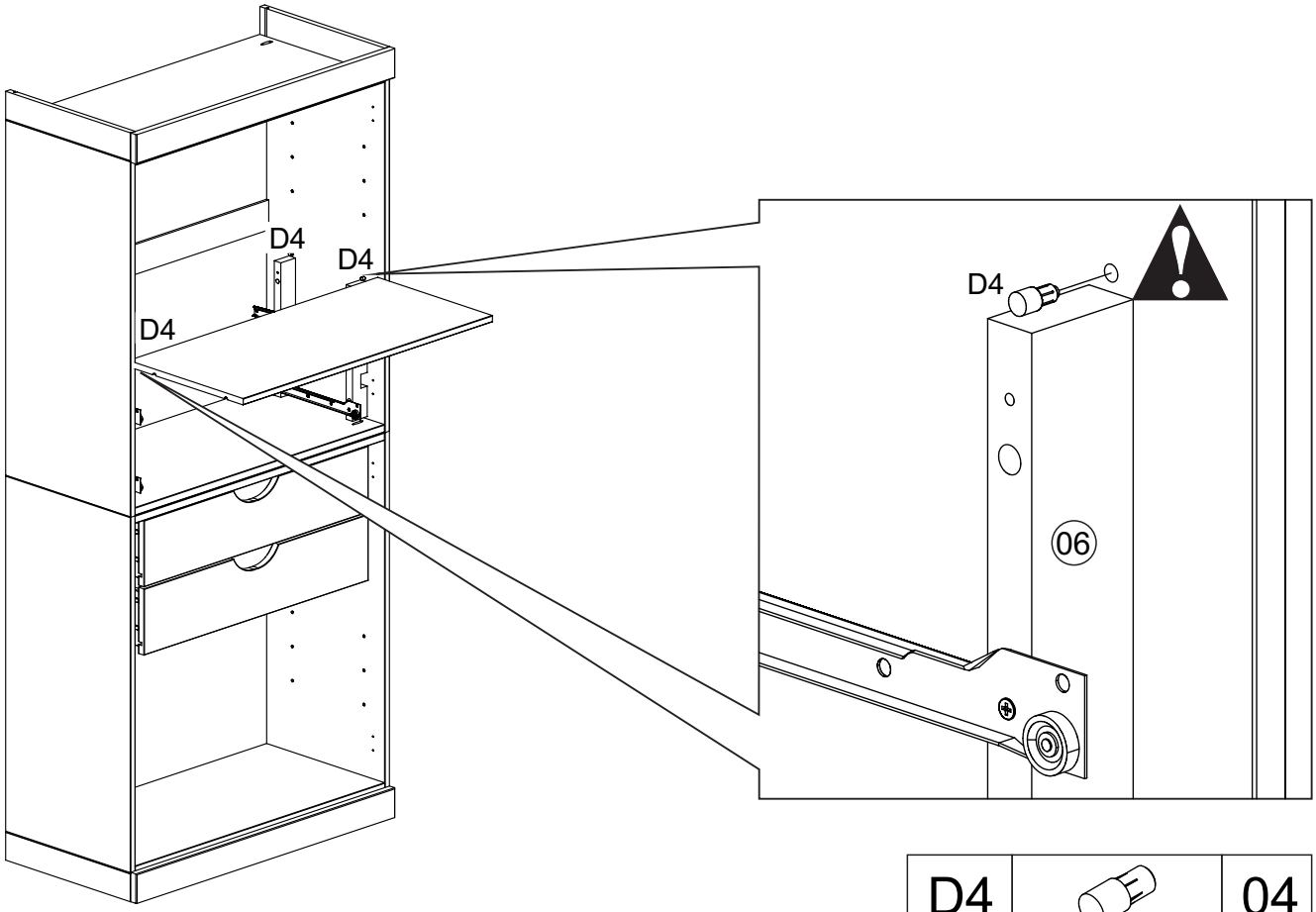

D4		04

18) Adding a Second Set of Drawers to the Bottom *(Sold Separately)*

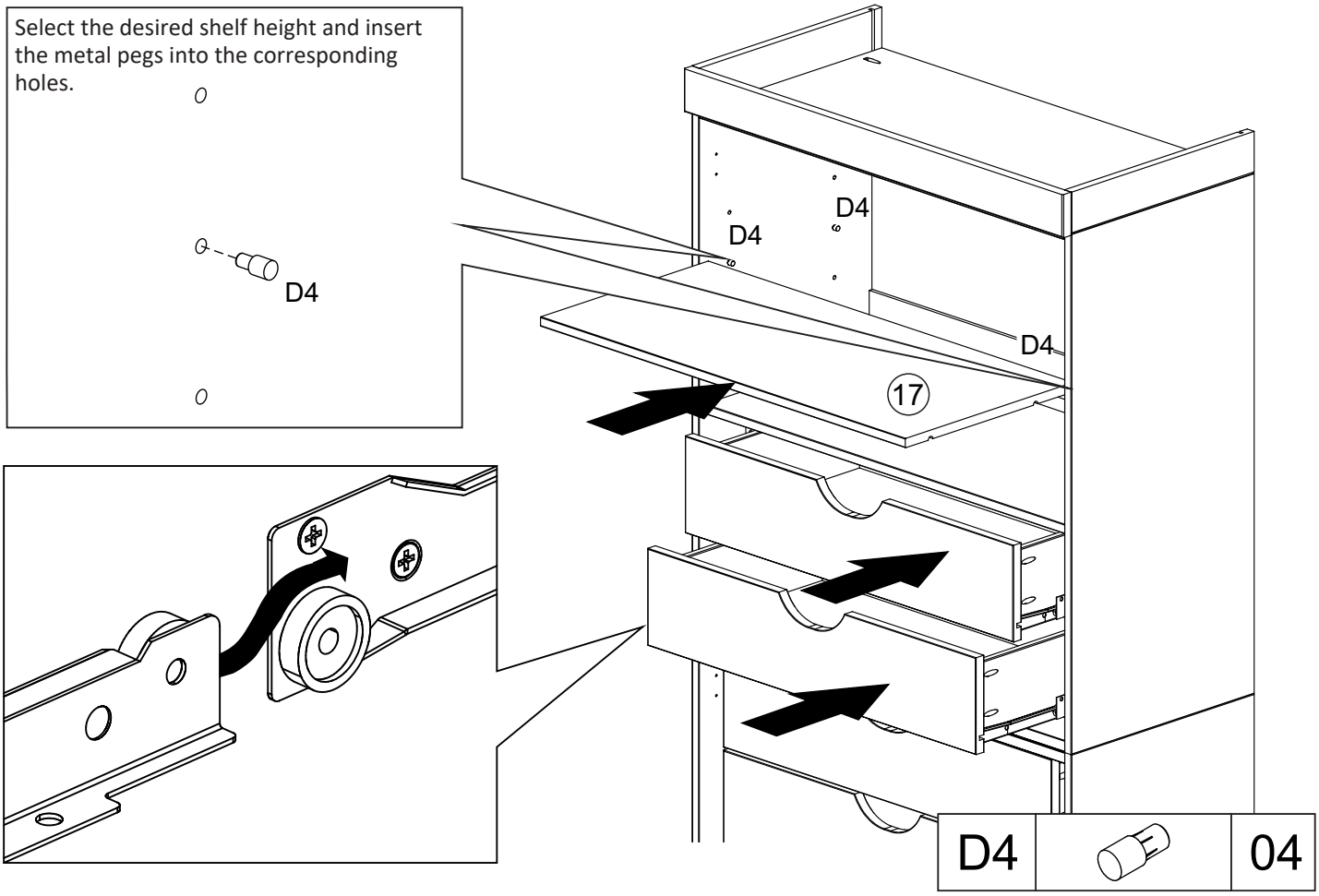

D4		04